YANMAR

PARTS CATALOG

0CNP6-M06360EN

Last update Nov., 2020

Corresponding table of the machine and engine

Machine		Engine
Model	Spec.	Model
YT235Y,EU	without cabin	3TNV88C-KRNES
	with cabin	3TNV88C-KRNESQ

Contents

0CNP6-M06360

Fig. No.	Fig. Name
ENGINE CONTROL	
1.	ENGINE RELATED
2.	RADIATOR
3.	COOLER(ACCESSORIES)(CABIN)
4.	HEATER(ACCESSORIES)(CABIN)
5.	ACCEL LEVER
6.	EXHAUST PIPE
7.	EXHAUST PIPE(CABIN)
8.	FUEL TANK
231.	(8A)FUEL TANK
9.	FUEL TANK(CABIN)
232.	(9A)FUEL TANK(CABIN)
10.	FUEL COOLER
11.	FUEL HOSE(1)
12.	FUEL HOSE(2)
13.	FUEL FILTER
14.	AIR CLEANER
FRONT AXLE	
15.	FRONT BRACKET
16.	CENTER PIN SUPPORT
17.	TIE ROD
18.	RING GEAR
19.	DIFFERENTIAL GEAR
20.	PROPELLER SHAFT
21.	FRONT SHAFT(1)
22.	DIPSTICK
23.	FRONT AXLE CASE
24.	FRONT GEAR CASE
25.	FRONT SHAFT(2)
26.	FRONT SPINDLE
27.	SHAFT COVER
28.	FRONT WHEEL TIRE(6-14)
29.	FRONT WHEEL TIRE(24X8.5-12)
30.	FRONT WHEEL TIRE(25X8.5-14)
31.	FRONT WHEEL TIRE(200/70R16)
32.	HUB BOLT
33.	FRONT GEAR BOX
34.	STEERING COLUMN
35.	JOINT(STEERING)
36.	STEERING WHEEL
37.	P.S.T. CYLINDER
38.	P.S.T. VALVE
39.	BRACKET(P.S.T. VALVE)
40.	COVER(P.S.T. VALVE)
41.	COVER(P.S.T. VALVE)(CABIN)
42.	P.S.T. HOSE
TRANSMISSION	
43.	CLUTCH HOUSING

Contents

0CNP6-M06360

Fig. No.	Fig. Name
44.	DOCKING BOLT
45.	COUPLING(FLYWHEEL)
46.	TRANSMISSION CASE
47.	CENTER CASE
48.	REDUCTION SHAFT
49.	COUNTER SHAFT
50.	P.T.O. CLUTCH
51.	P.T.O. DRIVE SHAFT
52.	P.T.O. SHAFT
53.	P.T.O. VALVE
54.	SUB SHIFT
55.	P.T.O. SHIFT
56.	4WD DRIVE
57.	4WD SHIFT
58.	4WD VALVE
59.	H.S.T.
60.	LINK(H.S.T. CRUISE)
61.	LINK(H.S.T.)
62.	H.S.T. CONTROL

REAR AXLE

Fig. No.	Fig. Name
63.	RING GEAR
64.	DIFFERENTIAL GEAR
65.	DIFFERENTIAL CARRIER
66.	REAR AXLE HOUSING
67.	DIFFERENTIAL LOCK
68.	DIFFERENTIAL LOCK PEDAL
69.	FINAL PINION
70.	FINAL GEAR
71.	REAR AXLE SHAFT
72.	REAR WHEEL TIRE(9.5-22)
73.	REAR WHEEL TIRE(15X19.5)
74.	REAR WHEEL TIRE(315/80D16)
75.	REAR WHEEL TIRE(320/70R20)
76.	HUB BOLT
77.	PARKING BRAKE
78.	BRAKE
79.	PARKING BRAKE WIRE
80.	PEDAL
81.	BRAKE LINK

HYDRAULIC CONTROL

Fig. No.	Fig. Name
82.	HYDRAULIC PUMP
83.	HYDRAULIC CYLINDER CASE
84.	PISTON
85.	LIFT CRANK
86.	CONTROL VALVE
87.	RELIEF VALVE
88.	STOP VALVE CONTROL
89.	STOP VALVE

Contents

0CNP6-M06360

Fig. No.	Fig. Name
90.	SAFETY VALVE
91.	LOADER VALVE
92.	LOADER LEVER
93.	HYDRAULIC CONTROL
94.	HYDRAULIC CONTROL LEVER
95.	HYDRAULIC PIPING
96.	HYDRAULIC PIPING(TRANSMISSION)
97.	HYDRAULIC FILTER
98.	HYDRAULIC PIPING(LOADER)
99.	OIL COOLER
100.	HYDRAULIC PIPING(H.S.T.)

ELECTRICAL PARTS

Fig. No.	Fig. Name
101.	WIRE HARNESS(ENGINE)
102.	WIRE HARNESS(ENGINE)(CABIN)
103.	WIRE HARNESS(TRANSMISSION)
104.	WIRE HARNESS(FLOOR)
105.	WIRE HARNESS(FLOOR)(CABIN)
106.	BATTERY
107.	BATTERY CLAMP
108.	WIRE HARNESS(BONNET)
109.	WIRE HARNESS(CABIN)
110.	SENSOR(TURNING)
111.	SWITCH(FLOOR)
112.	SWITCH(TRANSMISSION)

Fig. No.	Fig. Name
113.	SWITCH(STARTER)
114.	SWITCH(STARTER)(CABIN)
115.	SWITCH(COLUMN COVER)
116.	SWITCH COVER
117.	CONNECTOR COVER
118.	SWITCH(CABIN)
119.	LAMP(FLOOR)(FRONT)(CABIN)
120.	LAMP(FLOOR)(REAR)(CABIN)
121.	ROOM LAMP(CABIN)
122.	LAMP(FLOOR)(REAR)
123.	REFLECTOR
124.	HEAD LAMP
125.	LAMP(PARKING BRAKE)
126.	METER
127.	HORN
128.	BACK BUZZER
129.	RELAY(ENGINE)
130.	RELAY(ENGINE)(CABIN)
131.	RELAY(CABIN)
132.	RELAY(FLOOR)
133.	BRACKET(LICENCE)
134.	BRACKET(LICENCE)(CABIN)
135.	POWER SUPPLY SOCKET

Contents

0CNP6-M06360

Fig. No.	Fig. Name
FITTINGS	
136.	FRONT FRAME
137.	FRONT FRAME(CABIN)
138.	REAR FRAME
139.	BONNET
140.	BATTERY SUPPORT
141.	BONNET STAND
142.	DUCT(BONNET)
143.	DUCT(BONNET)(CABIN)
144.	COVER(BONNET)
145.	DASHBOARD
146.	DASHBOARD(CABIN)
147.	COLUMN COVER
148.	CURRENT PLATE
149.	INTERIORS
150.	PROTECTOR
151.	INTERIORS(CABIN)
152.	FLOOR COVER
153.	OVER FENDER
154.	SUB STEP
155.	FLOOR
156.	FLOOR MOUNT(1)
157.	FLOOR MOUNT(2)
158.	SEAT COVER
159.	SEAT COVER(CABIN)
160.	DRIVER SEAT
161.	REARVIEW MIRROR
162.	DUST GUARD
163.	FENDER LOWER COVER
164.	FENDER LOWER COVER(CABIN)
165.	FLOOR GUARD
166.	ASSIST GRIP
LABEL	
167.	LABEL(1)
168.	LABEL(2)
169.	LABEL(3)
170.	LABEL(3)(CABIN)
171.	LABEL(SAFETY)(1)
172.	LABEL(SAFETY)(2)
173.	LABEL(SAFETY)(2)(CABIN)
CONTROL	
174.	LEVER(LEFT)
175.	LEVER LINK(LEFT)
HITCH	
176.	TOP LINK
177.	TOP LINK HOOK
178.	LIFT LINK(LEFT)

Contents

0CNP6-M06360

Fig. No.	Fig. Name
179.	LIFT LINK(RIGHT)
180.	LOWER LINK
181.	LOWER LINK PIN

SAFETY FRAME

182.	SAFETY FRAME
250.	ROPS(ASSIST)

CABIN

183.	CABIN FRAME
184.	DOOR
185.	FRONT WINDOW
186.	REAR WINDOW
187.	CABIN SEAL(1)
188.	CABIN SEAL(2)
233.	CABIN SEAL(3)
189.	EXTERIOR
190.	ROOF
191.	REARVIEW MIRROR
192.	FRONT WIPER
193.	AUDIO
194.	AIR CONDITIONER(1)
195.	AIR CONDITIONER(2)
196.	AIR CONDITIONER(3)
197.	AIR CONDITIONER DUCT

Fig. No.	Fig. Name
198.	COMPRESSOR

ACCESSORIES

199.	DOCUMENT

OPTIONAL

200.	FRONT WEIGHT
201.	BRACKET(FRONT WEIGHT)
202.	FRONT HITCH
203.	P.T.O. SHAFT GUARD
204.	WORK LAMP(FRONT)(CABIN)
205.	WORK LAMP(REAR)(CABIN)
206.	WORK LAMP(FRONT)(LED)(CABIN)
207.	WORK LAMP(REAR)(LED)(CABIN)
208.	BEACON LAMP
209.	BEACON LAMP(CABIN)
210.	LADDER HITCH
211.	ADAPTER(LADDER HITCH)(1)
212.	ADAPTER(LADDER HITCH)(2)
213.	ADAPTER(LADDER HITCH)(3)
214.	ADAPTER(LADDER HITCH)(4)
215.	RADIO(CABIN)
216.	RADIO MOUNT
217.	EMBLEM(S.M.V.)
218.	EMBLEM(S.M.V.)(CABIN)

Contents

0CNP6-M06360

Fig. No.	Fig. Name
219.	FRONT WEIGHT HITCH
220.	WORK LAMP
221.	REAR WIPER(CABIN)
222.	MID P.T.O. UNIT
223.	MID P.T.O. LEVER
224.	P.S.T. SEAL
225.	DRIVER SEAT(DELUXE MS)
226.	DRIVER SEAT(DELUXE AS)
227.	DRIVER SEAT
228.	ANTENNA
229.	CONTROL KIT
230.	SAFETY VALVE KIT
234.	P.T.O. KIT(FRONT 3P)(1)
235.	P.T.O. KIT(FRONT 3P)(2)
236.	P.T.O. KIT(FRONT 3P)(3)
237.	P.T.O. KIT(FRONT 3P)(4)
238.	P.T.O. KIT(FRONT 3P)(5)
239.	HITCH KIT(FRONT 3P)(1)
240.	HITCH KIT(FRONT 3P)(2)
241.	HITCH KIT(FRONT 3P)(3)
242.	DAMPER CMP(FRONT 3P)
243.	PUSH BAR KIT(FRONT 3P)
244.	HOLDER KIT(FRONT 3P)
245.	DRAWBAR HITCH
246.	HITCH KIT(FRONT 3P)(QUICK)
247.	FRONT WEIGHT
248.	BRACKET(FRONT WEIGHT)
249.	BRACKET(EXTRA WEIGHT)

Fig.1. ENGINE RELATED

(A)=YT235Y, EU
(B)=
(C)=
(D)=
(E)=
(F)=

No.	Lev.	Parts No.	Description	Q'ty (A)	(B)	(C)	(D)	(E)	(F)	I	R
1	1	26106-060162	BOLT, M6X 16 PLATED	2							
2	1	26106-080202	BOLT, M8X 20 PLATED	2							
3	1	26106-080252	BOLT, M8X 25 PLATED	2							
4	1	194180-61980	GROMMET, 24	1							

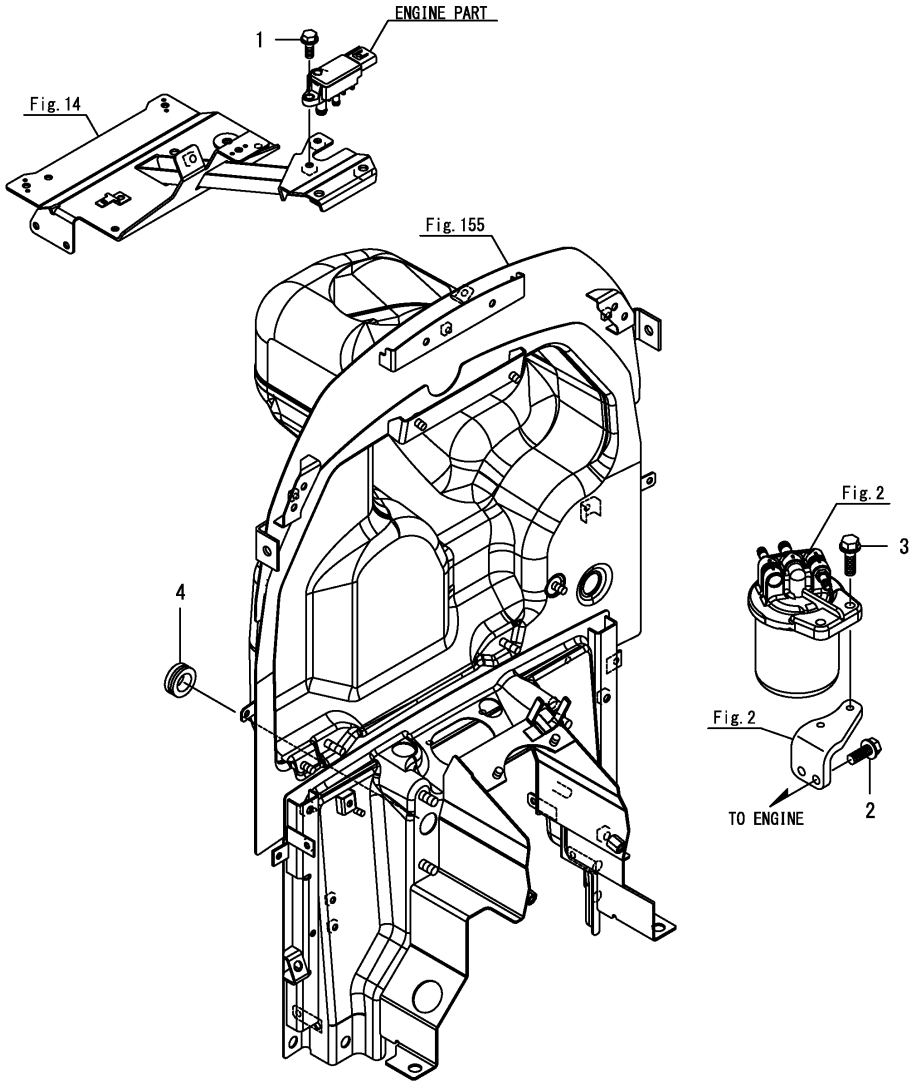

N:Old $\xleftarrow[\text{No}]{\text{Yes}}$ New, Q:Old $\xleftarrow[\text{Yes}]{\text{No}}$ New, R:Old $\xleftarrow[\text{Yes}]{\text{Yes}}$ New, S:Old $\xleftarrow[\text{No}]{\text{No}}$ New, W:Add, Z:Discontinued, F:Interchangeable by set, K:Q'ty Change

Copyright (C) 2017 YANMAR GLOBAL CS CO., LTD. All RightsReserved.

Fig.2. RADIATOR

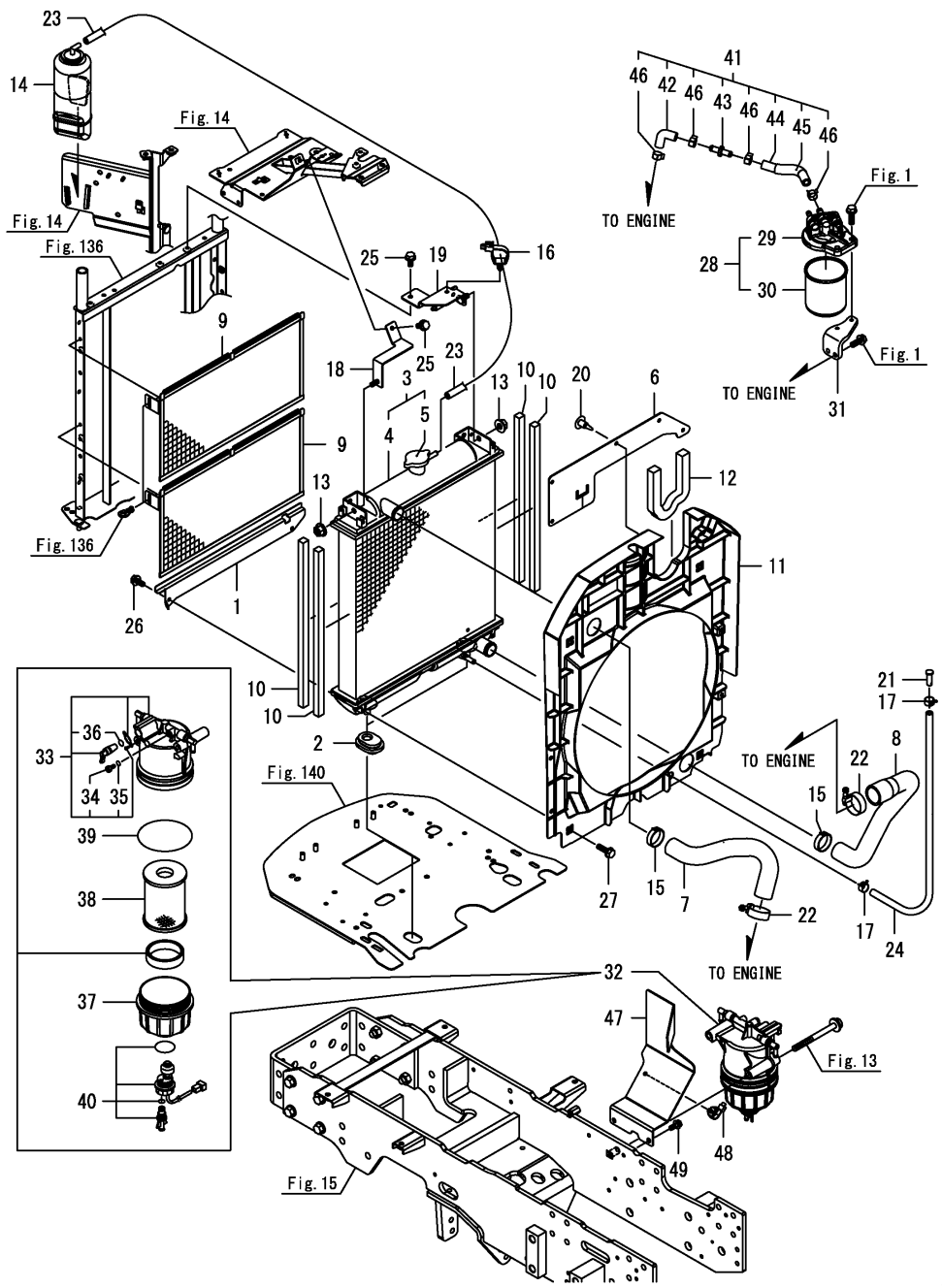

(A)=YT235Y, EU (D)=
(B)= (E)=
(C)= (F)=

No.	Lev.	Parts No.	Description	Q'ty (A)	(B)	(C)	(D)	(E)	(F)	I	R
1	1	1A8420-00561	RAIL, LOWER	1							
2	1	198200-00610	RUBBER, RADIATOR	2							
3	1	1A8420-00610	RADIATOR ASSY	1							
4	2	1A8420-00630	RADIATOR, BODY	1							
5	2	129107-44590	CAP, RADIATOR	1							
6	1	1A8420-00670	COVER, SHROUD	1							
7	1	1A8420-00810	CW-T, IN	1							
8	1	1A8420-00820	CW-T, OUT	1							
9	1	1A8420-00951	SCREEN ASSY, RADI	2							
10	1	1A8420-01480	URETHANE, RADIATOR	4							
11	1	1A8426-01500	M ASSY, FAN SHROUD	1							
12	1	1A8420-01530	URETHANE,SHROUD	1							
13	1	194990-22140	NUT, M8	2							
14	1	129263-44510	TANK ASSY, SUB	1							
15	1	175022-49730	CLIP, HOSE 31.0	2							
16	1	1A8275-51670	CLIP, M8 HOLE	1							
17	1	114270-59010	CLAMP, HOSE 12	2							
18	1	1A8420-61400	STAY ASSY,RADIATOR L	1							
18-1	1	1A8420-61401	STAY ASSY,RADIATOR L	1						N	
	(A=F100059)										
19	1	1A8420-61420	STAY ASSY,RADIATOR R	1							
20	1	194697-62560	CLIP, HOLE CAP	5							
21	1	22487-080200	PIN, H 8X 20	1							
22	1	23000-041000	CLAMP, 41	2							
23	1	23780-070600	HOSE, FUEL 7X 600	1							
24	1	23980-730500	HOSE, 7.3X 500	1							
25	1	26106-060122	BOLT, M6X 12 PLATED	3							
26	1	26106-060122	BOLT, M6X 12 PLATED	2							
27	1	26106-060162	BOLT, M6X 16 PLATED	4							
28	1	129A26-55601	FILTER ASSY, FUEL	1							
29	2	129A26-55610	BRACKET ASSY, FUEL	1							
30	2	129A23-55810	FILTER,FO	1							
31	1	129A26-55650	BRACKET, FUEL FILTER	1							
32	1	129979-55700	FILTER ASSY, FUEL	1							
33	2	129E00-55710	BODY ASSY	1							
34	3	129A00-55751	PLUG, AIR VENT	1							
35	3	129A00-55760	O-RING	1							
36	3	24311-000110	O-RING, 1AP11.0	1							
37	2	129C20-55720	CUP, FUEL FILTER	1							
38	2	129A00-55730	ELEMENT, FUEL FILTER	1							
39	2	129A00-55740	O-RING	1							
40	2	129917-55821	SENSOR ASSY, LEVEL	1							
41	1	129A26-59010	HOSE ASSY, FUEL	1						Z	
	(A=F100238)										
42	2	129A26-59060	PIPE, FUEL	1						Z	
	(A=F100238)										
43	2	129A26-59160	JOINT, FUEL HOSE	1						Z	
	(A=F100238)										
44	2	129A26-59210	HOSE, FUEL	1						Z	
	(A=F100238)										
45	2	129A26-59550	PROTECTOR, MESH	1						Z	

N:Old $\overset{\text{Yes}}{\underset{\text{No}}{\leftrightarrow}}$ New, Q:Old $\overset{\text{No}}{\underset{\text{Yes}}{\leftrightarrow}}$ New, R:Old $\overset{\text{Yes}}{\underset{\text{Yes}}{\leftrightarrow}}$ New, S:Old $\overset{\text{No}}{\underset{\text{No}}{\leftrightarrow}}$ New, W:Add, Z:Discontinued, F:Interchangeable by set, K:Q'ty Change

++ CONTINUE ++

Copyright (C) 2017 YANMAR GLOBAL CS CO., LTD. All RightsReserved.

Fig.2. RADIATOR

(A)=YT235Y, EU
(B)=
(C)=
(D)=
(E)=
(F)=

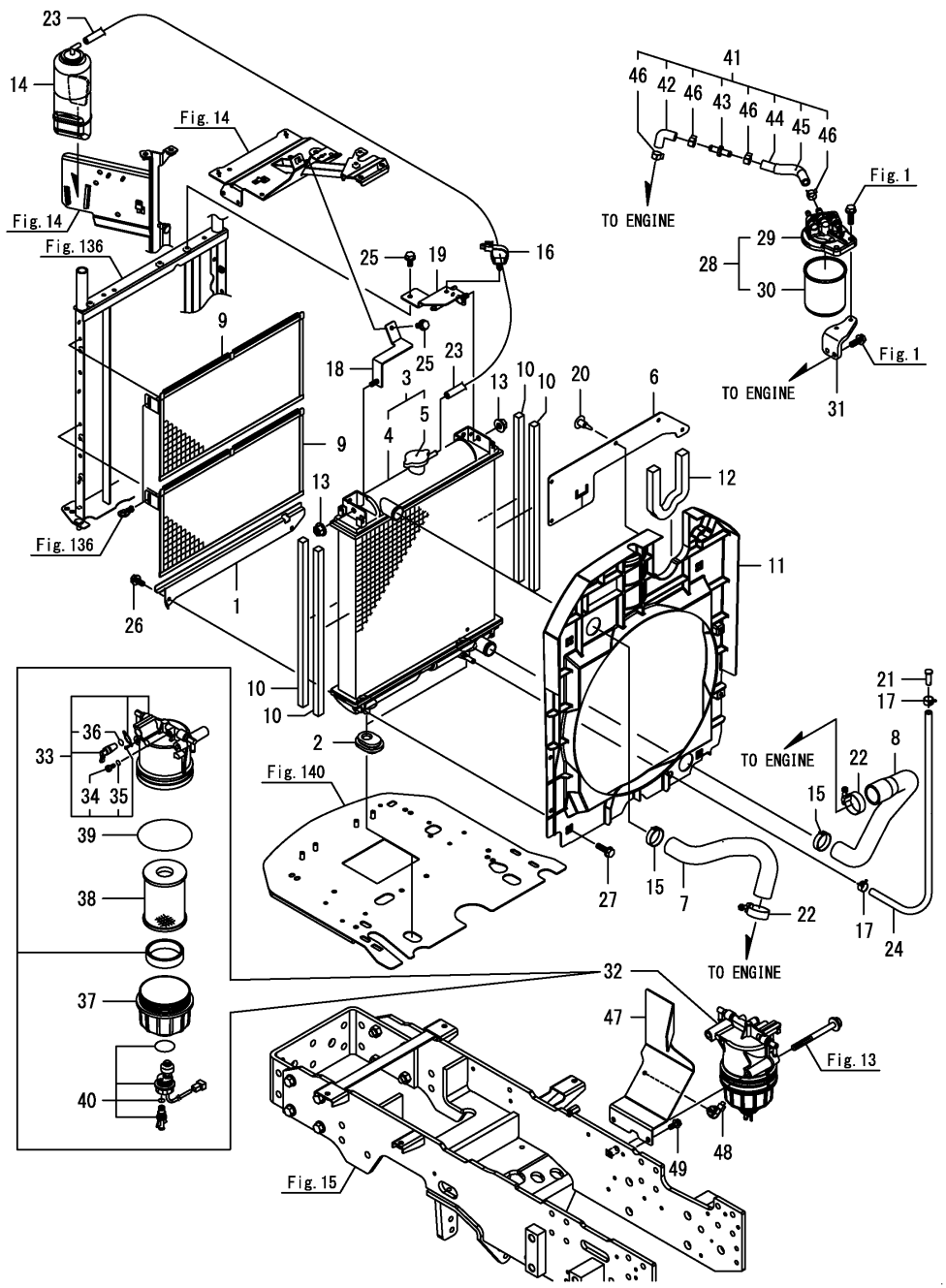

No.	Lev.	Parts No.	Description	Q'ty (A)	(B)	(C)	(D)	(E)	(F)	I	R
46	2	(A=F100238) 23080-015000 (A=F100238)	CLAMP, 15	4						Z	
47	1	1A8426-01550	PLATE, SIDE R	1							
48	1	1A8275-51670	CLIP, M8 HOLE	1							
49	1	26106-080162	BOLT, M8X 16 PLATED	2							

N:Old $\overset{\text{Yes}}{\underset{\text{No}}{\leftrightarrows}}$ New, Q:Old $\overset{\text{No}}{\underset{\text{Yes}}{\leftrightarrows}}$ New, R:Old $\overset{\text{Yes}}{\underset{\text{Yes}}{\leftrightarrows}}$ New, S:Old $\overset{\text{No}}{\underset{\text{No}}{\leftrightarrows}}$ New, W:Add, Z:Discontinued, F:Interchangeable by set, K:Q'ty Change

Copyright (C) 2017 YANMAR GLOBAL CS CO., LTD. All RightsReserved.

Fig.3. COOLER(ACCESSORIES)(CABIN)

(A)=YT235Y, EU
(B)=
(C)=
(D)=
(E)=
(F)=

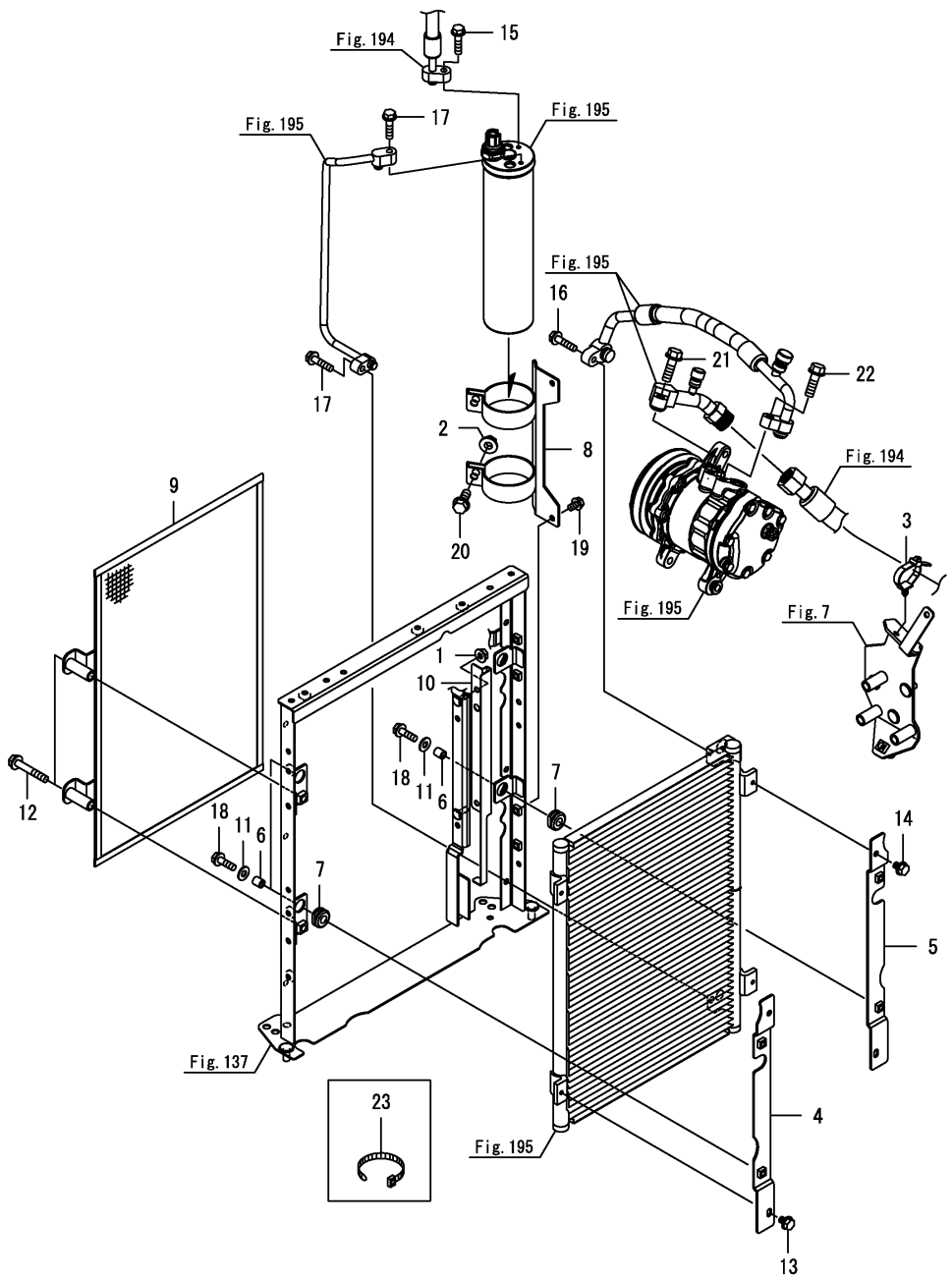

No.	Lev.	Parts No.	Description	Q'ty (A)	(B)	(C)	(D)	(E)	(F)	I	R
1	1	194990-22130	NUT, M6	2							
2	1	194990-22140	NUT, M8	2							
3	1	1A8275-51670	CLIP, M8 HOLE	2							
4	1	1A8420-60160	STAY ASSY, CONDEN A	1							
5	1	1A8420-60180	STAY ASSY, CONDEN B	1							
6	1	1A7260-78700	SPACER, 11.3	4							
7	1	198129-78720	GROMMET, 10-16	4							
8	1	1A8420-87140	STAY ASSY, R/D	1							
9	1	1A8420-89151	SCREEN ASSY, CONDEN	1							
10	1	1A8420-89210	RAIL, CONDEN-NET	1							
11	1	22157-060000	WASHER, 6	4							
12	1	26106-080502	BOLT, M8X 50 PLATED	2							
13	1	26106-060122	BOLT, M6X 12 PLATED	2							
14	1	26106-060122	BOLT, M6X 12 PLATED	2							
15	1	26106-060252	BOLT, M6X 25 PLATED	1							
16	1	26106-060252	BOLT, M6X 25 PLATED	1							
17	1	26106-060252	BOLT, M6X 25 PLATED	2							
18	1	26106-060252	BOLT, M6X 25 PLATED	4							
19	1	26106-060122	BOLT, M6X 12 PLATED	2							
20	1	26106-080162	BOLT, M8X 16 PLATED	2							
21	1	26106-080252	BOLT, M8X 25 PLATED	1							
22	1	26106-080252	BOLT, M8X 25 PLATED	1							
23	1	29622-250001	BAND, RF250	1							

N:Old $\frac{\text{Yes}}{\text{No}}$ New, Q:Old $\frac{\text{No}}{\text{Yes}}$ New, R:Old $\frac{\text{Yes}}{\text{Yes}}$ New, S:Old $\frac{\text{No}}{\text{No}}$ New, W:Add, Z:Discontinued, F:Interchangeable by set, K:Q'ty Change

Copyright (C) 2017 YANMAR GLOBAL CS CO., LTD. All RightsReserved.

Fig.4. HEATER(ACCESSORIES)(CABIN)

(A)=YT235Y, EU
(B)=
(C)=
(D)=
(E)=
(F)=

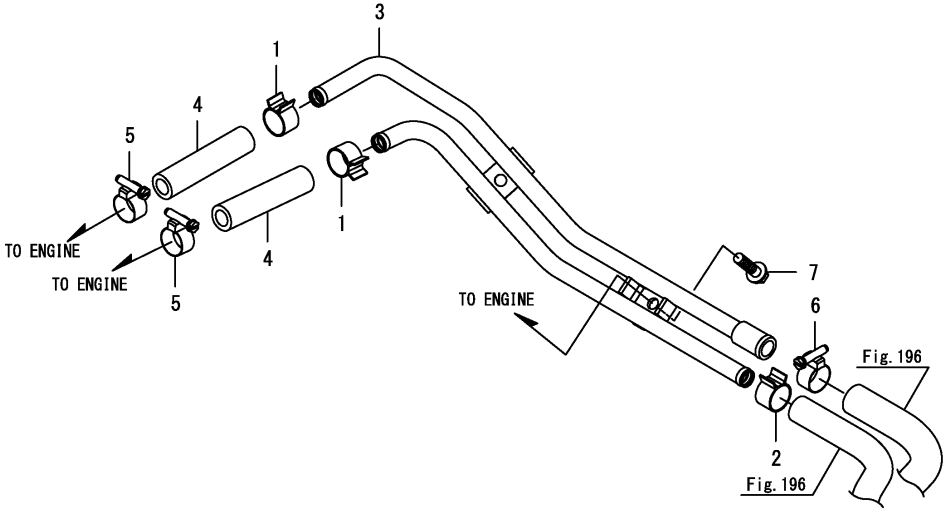

No.	Lev.	Parts No.	Description	Q'ty (A)	(B)	(C)	(D)	(E)	(F)	I	R
1	1	1A7030-88710	CLIP, HEATER HOSE	2							
2	1	1A7030-88710	CLIP, HEATER HOSE	1							
3	1	1A8420-89500	PIPE ASSY, HEATER	1							
4	1	198208-89530	HOSE, HEATER	2							
5	1	23000-022000	CLAMP, 22	2							
6	1	23000-022000	CLAMP, 22	1							
7	1	26106-080302	BOLT, M8X 30 PLATED	1							

N:Old ◄Yes/No► New, Q:Old ◄No/Yes► New, R:Old ◄Yes/Yes► New, S:Old ◄No/No► New, W:Add, Z:Discontinued, F:Interchangeable by set, K:Q'ty Change

Copyright (C) 2017 YANMAR GLOBAL CS CO., LTD. All RightsReserved.

Fig.5. ACCEL LEVER

(A)=YT235Y, EU
(B)=
(C)=
(D)=
(E)=
(F)=

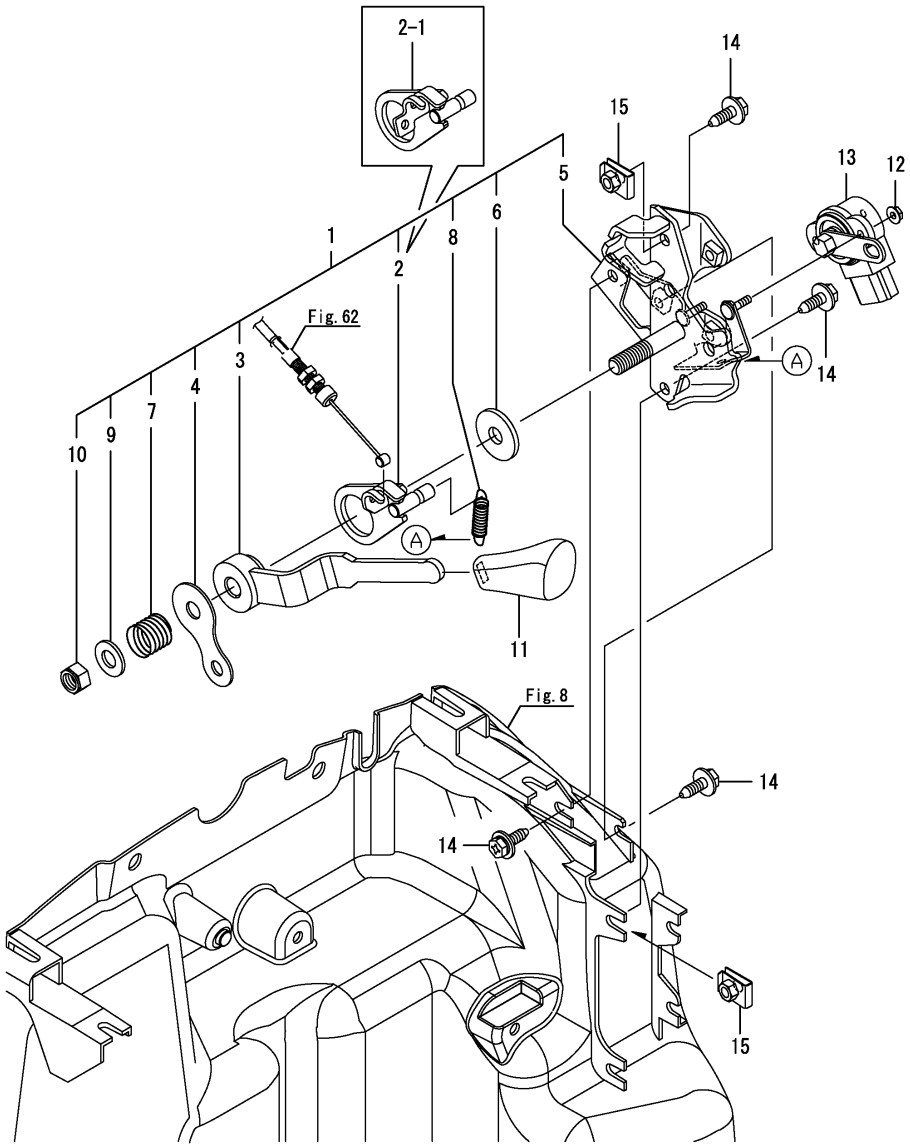

No.	Lev.	Parts No.	Description	Q'ty (A)	(B)	(C)	(D)	(E)	(F)	I	R
1	1	1A8425-01104	LEVER UNIT, ACCEL	1							
1-1	1	1A8425-01105	LEVER UNIT, ACCEL	1						S	
	(A=F100206)										
2	2	1A8420-01172	ARM ASSY, WIRE	1							
2-1	2	1A8420-01173	ARM ASSY, WIRE	1						S	
	(A=F100206)										
3	2	1A8420-01211	LEVER, ACCELERATOR	1							
4	2	1A8060-01220	PLATE, ACCELERATOR	1							
5	2	1A8425-01251	BRACKET ASSY, ACCEL	1							
6	2	198200-01260	PLATE, FRICTION	1							
7	2	1C6982-49480	SPRING 15X15	1							
8	2	194250-61850	SPRING, LOCK RETURN	1							
9	2	22137-100000	WASHER, 10	1							
10	2	26346-100002	NUT, M10	1							
11	1	1A8060-01250	KNOB, ACCEL LEVER	1							
12	1	194990-22110	NUT, M4	2							
13	1	1A8060-55600	SENSOR, ACCELERATOR	1							
14	1	198072-60590	BOLT, M6X20	4							
15	1	198071-61890	NUT, SPEED M6	2							

N:Old $\xleftrightarrow[\text{No}]{\text{Yes}}$ New, Q:Old $\xleftrightarrow[\text{Yes}]{\text{No}}$ New, R:Old $\xleftrightarrow[\text{Yes}]{\text{Yes}}$ New, S:Old $\xleftrightarrow[\text{No}]{\text{No}}$ New, W:Add, Z:Discontinued, F:Interchangeable by set, K:Q'ty Change

Copyright (C) 2017 YANMAR GLOBAL CS CO., LTD. All RightsReserved.

Fig.6. EXHAUST PIPE

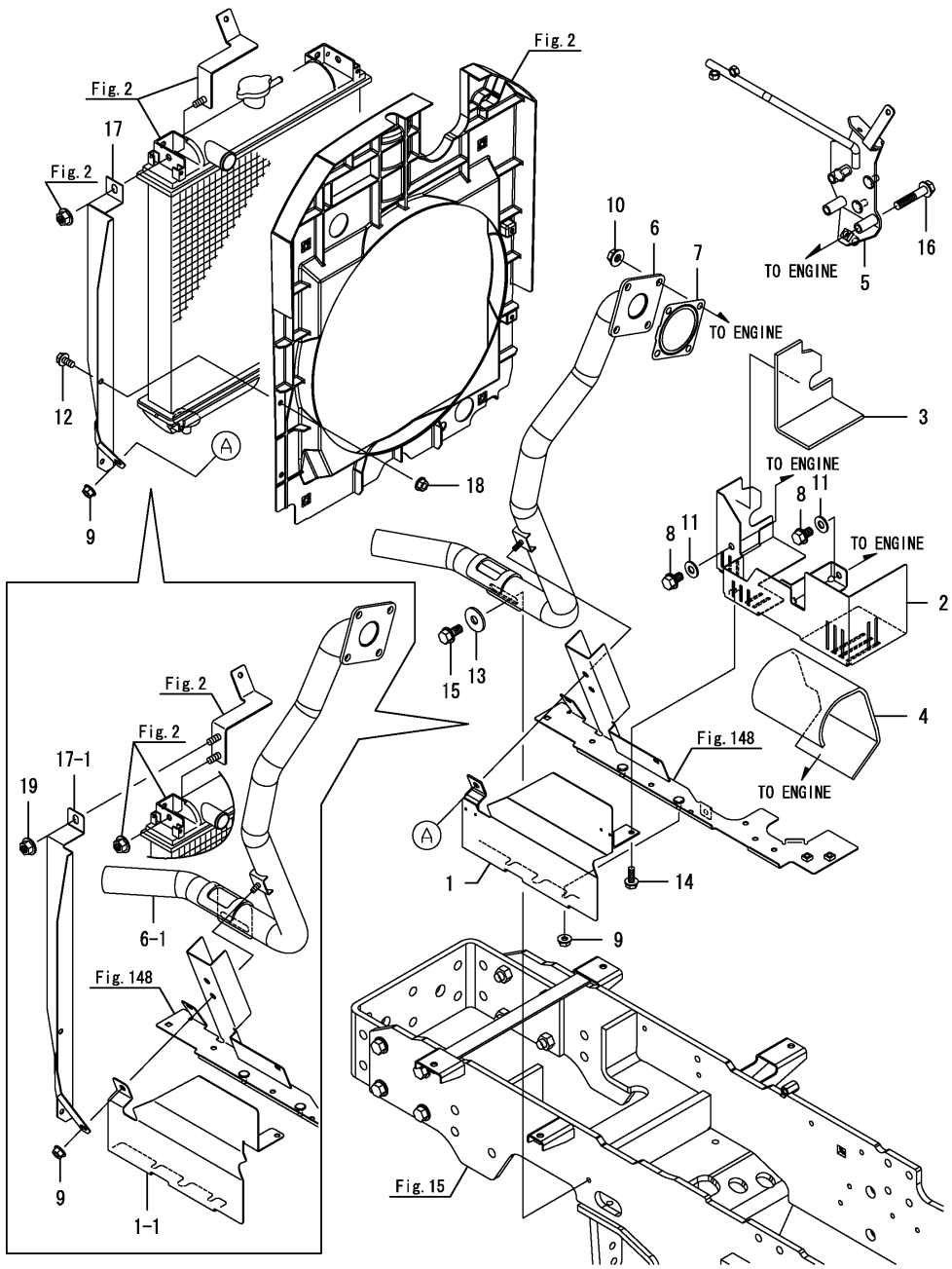

(A)=YT235Y, EU (D)=
(B)= (E)=
(C)= (F)=

No.	Lev.	Parts No.	Description	Q'ty (A)	(B)	(C)	(D)	(E)	(F)	I	R
1	1	1A8420-01352	PLATE ASSY, COVER	1							
1-1	1	1A8420-01390	PLATE, COVER	1						S	
	(A=F100059)										
2	1	1A8420-01401	PLATE ASSY, SHUTTER	1							
3	1	1A8420-01431	HEAT INSULATOR, EXHA	1							
4	1	1A8420-01440	HEAT INSULATOR,START	1							
5	1	1A8405-01710	STAY ASSY,CLAMP HOSE	1							
6	1	1A8420-03100	PIPE ASSY, EXHAUST	1							
6-1	1	1A8420-03101	PIPE ASSY, EXHAUST	1						S	
	(A=F100059)										
7	1	129930-13201	GASKET, SILENCER	1							
8	1	119802-13811	BOLT, M8X12 10.9T	2							
9	1	194990-22130	NUT, M6	3							
10	1	194990-22140	NUT, M8	4							
11	1	22137-080000	WASHER, 8	2							
12	1	26106-060122	BOLT, M6X 12 PLATED	2							
13	1	22157-080000	WASHER, 8	1							
14	1	26106-060162	BOLT, M6X 16 PLATED	1							
15	1	26106-080162	BOLT, M8X 16 PLATED	1							
16	1	26106-080402	BOLT, M8X 40 PLATED	3							
17	1	1A8420-01850	BRACKET ASSY,SUPPORT	1							
17-1	1	1A8420-01851	BRACKET ASSY,SUPPORT	1						S	
	(A=F100059)										
18	1	194990-22130	NUT, M6	2							
19	1	194990-22140	NUT, M8	1						W	
	(A=F100059)										

N:Old $\xleftrightarrow[\text{No}]{\text{Yes}}$ New, Q:Old $\xleftrightarrow[\text{Yes}]{\text{No}}$ New, R:Old $\xleftrightarrow[\text{Yes}]{\text{Yes}}$ New, S:Old $\xleftrightarrow[\text{No}]{\text{No}}$ New, W:Add, Z:Discontinued, F:Interchangeable by set, K:Q'ty Change

Copyright (C) 2017 YANMAR GLOBAL CS CO., LTD. All RightsReserved.

Fig.7. EXHAUST PIPE(CABIN)

(A)=YT235Y, EU
(B)=
(C)=
(D)=
(E)=
(F)=

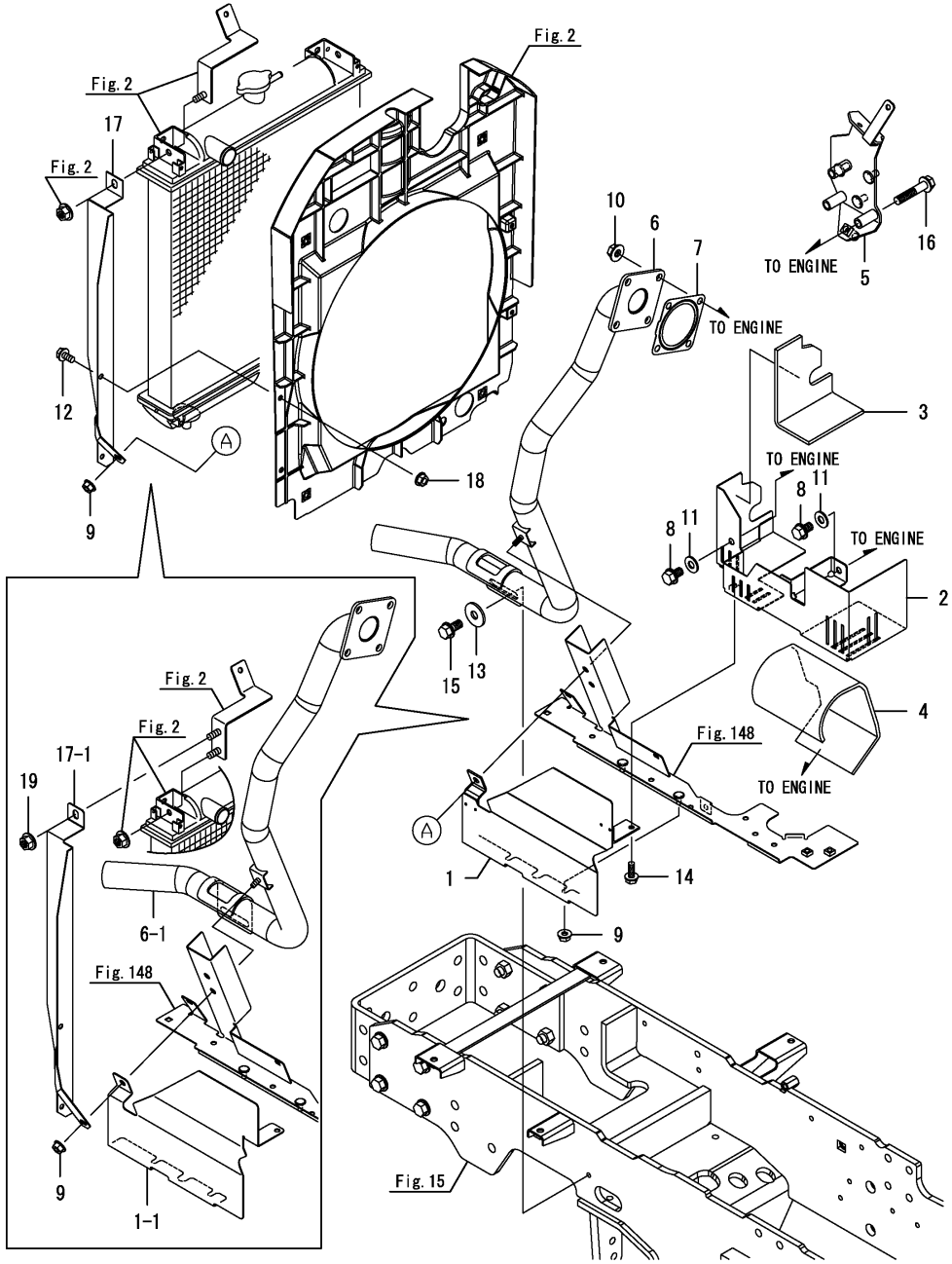

No.	Lev.	Parts No.	Description	Q'ty (A)	(B)	(C)	(D)	(E)	(F)	I	R
1	1	1A8420-01352	PLATE ASSY, COVER	1							
1-1	1	1A8420-01390	PLATE, COVER	1						S	
	(A=F100059)										
2	1	1A8420-01401	PLATE ASSY, SHUTTER	1							
3	1	1A8420-01431	HEAT INSULATOR, EXHA	1							
4	1	1A8420-01440	HEAT INSULATOR,START	1							
5	1	1A8420-01711	STAY ASSY,CLAMP HOSE	1							
6	1	1A8420-03100	PIPE ASSY, EXHAUST	1							
6-1	1	1A8420-03101	PIPE ASSY, EXHAUST	1						S	
	(A=F100059)										
7	1	129930-13201	GASKET, SILENCER	1							
8	1	119802-13811	BOLT, M8X12 10.9T	2							
9	1	194990-22130	NUT, M6	3							
10	1	194990-22140	NUT, M8	4							
11	1	22137-080000	WASHER, 8	2							
12	1	26106-060122	BOLT, M6X 12 PLATED	2							
13	1	22157-080000	WASHER, 8	1							
14	1	26106-060162	BOLT, M6X 16 PLATED	1							
15	1	26106-080162	BOLT, M8X 16 PLATED	1							
16	1	26106-080402	BOLT, M8X 40 PLATED	3							
17	1	1A8420-01850	BRACKET ASSY,SUPPORT	1							
17-1	1	1A8420-01851	BRACKET ASSY,SUPPORT	1						S	
	(A=F100059)										
18	1	194990-22130	NUT, M6	2							
19	1	194990-22140	NUT, M8	1						W	
	(A=F100059)										

N:Old $\xleftrightarrow[\text{No}]{\text{Yes}}$ New, Q:Old $\xleftrightarrow[\text{Yes}]{\text{No}}$ New, R:Old $\xleftrightarrow[\text{Yes}]{\text{Yes}}$ New, S:Old $\xleftrightarrow[\text{No}]{\text{No}}$ New, W:Add, Z:Discontinued, F:Interchangeable by set, K:Q'ty Change

Copyright (C) 2017 YANMAR GLOBAL CS CO., LTD. All RightsReserved.

Fig.8. FUEL TANK

(A)=YT235Y, EU
(B)=
(C)=
(D)=
(E)=
(F)=

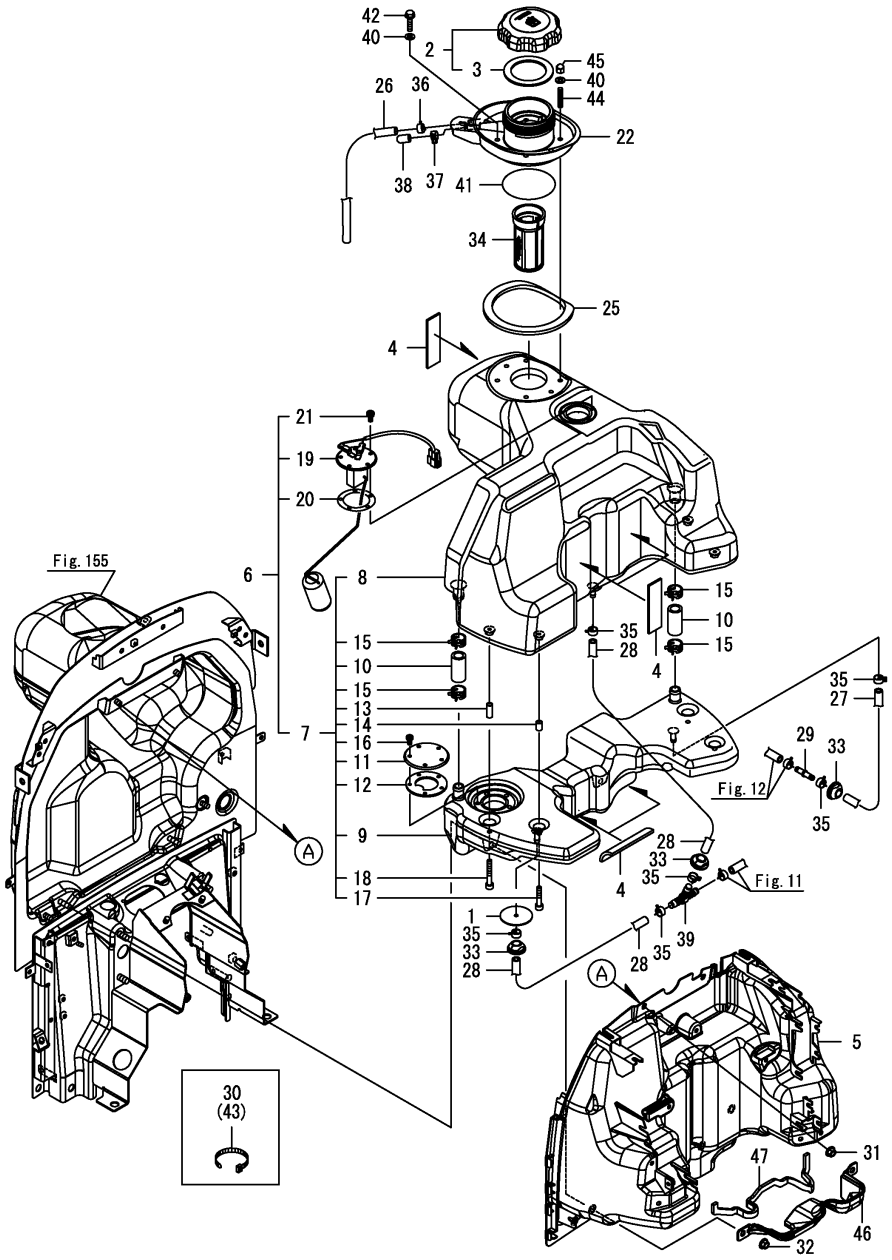

No.	Lev.	Parts No.	Description	Q'ty (A)	(B)	(C)	(D)	(E)	(F)	I	R
1	1	198200-04020	INSULATOR, TANK LOW	2							
2	1	1A8330-04030	CAP ASSY,FILLER	1							
3	2	198200-04040	GASKET, FUEL CAP	1							
4	1	198200-04090	CUSHION, TANK F	5							
5	1	1A8420-04093	COVER, FO TANK	1							
6	1	1A8420-04101	TANK KIT, FUEL	1							
7	2	1A8420-04111	TANK ASSY, FO	1							
8	3	1A8420-04121	TANK ASSY, FO A	1							
9	3	1A8400-04140	TANK ASSY, FO B	1							
10	3	1A8400-04160	HOSE, FO	2							
11	3	1A7180-04170	COVER	1							
12	3	1A8060-04180	PACKING	1							
13	3	1A8400-04240	COLLAR, 7X10X25	2							
14	3	1A8400-04250	COLLAR, 7X10X15	2							
15	3	1A8420-04200	CLIP,HOSE	4							
16	3	1A7180-04180	SCREW, M5X14	5							
17	3	1A8400-04220	BOLT, HEX SOCKET	2							
18	3	1A8400-04210	BOLT, HEX SOCKET	2							
19	2	1A8400-56600	GAUGE ASSY, FUEL	1							
20	2	198200-56630	GASKET, FUEL GAUGE	1							
21	2	1A7180-04180	SCREW, M5X14	5							
22	1	1A8420-04211	SUMP, FO	1							
25	1	1A8420-04261	GASKET, DRIP PAN	1							
26	1	1A8425-88970	HOSE, DRAIN RL	1							
27	1	1A8420-04320	HOSE, FUEL	1							
28	1	1A8470-04600	HOSE, FUEL 250	2							
29	1	1A7180-04850	JOINT, FUEL HOSE	1							
30	1	29622-250001	BAND, RF250	1							
31	1	194990-22140	NUT, M8	4							
32	1	194990-22140	NUT, M8	2							
33	1	194170-51210	GROMMET, 25/13	3							
34	1	101504-55101	STRAINER, FUEL	1							
35	1	114270-59010	CLAMP, HOSE 12	6							
36	1	114270-59010	CLAMP, HOSE 12	1							
37	1	114270-59010	CLAMP, HOSE 12	1							
38	1	129461-59580	CAP, FUEL	1							
39	1	119629-59910	JOINT, 3-WAY	1							
40	1	22190-060000	WASHER, SEAL 6	6							
41	1	24311-000850	O-RING, 1AP85.0	1							
42	1	26106-060302	BOLT, M6X 30 PLATED	3							
43	1	29622-250001	BAND, RF250	1							
44	1	26216-060252	STUD, M6X 25	3							
45	1	26667-060002	NUT, CAP M6	3							
46	1	1A8426-04110	COVER, FO TANK LOWER	1							
47	1	1A8426-04130	SEAL, COVER TANK	1							

Remarks
* This item is applicable to [(A)=F100335] or previous machines(Refer to Fig.231).

N:Old ←Yes/No→ New, Q:Old ←No/Yes→ New, R:Old ←Yes/Yes→ New, S:Old ←No/No→ New, W:Add, Z:Discontinued, F:Interchangeable by set, K:Q'ty Change

Copyright (C) 2017 YANMAR GLOBAL CS CO., LTD. All RightsReserved.

Fig.231. (8A)FUEL TANK

(A)=YT235Y, EU
(B)=
(C)=
(D)=
(E)=
(F)=

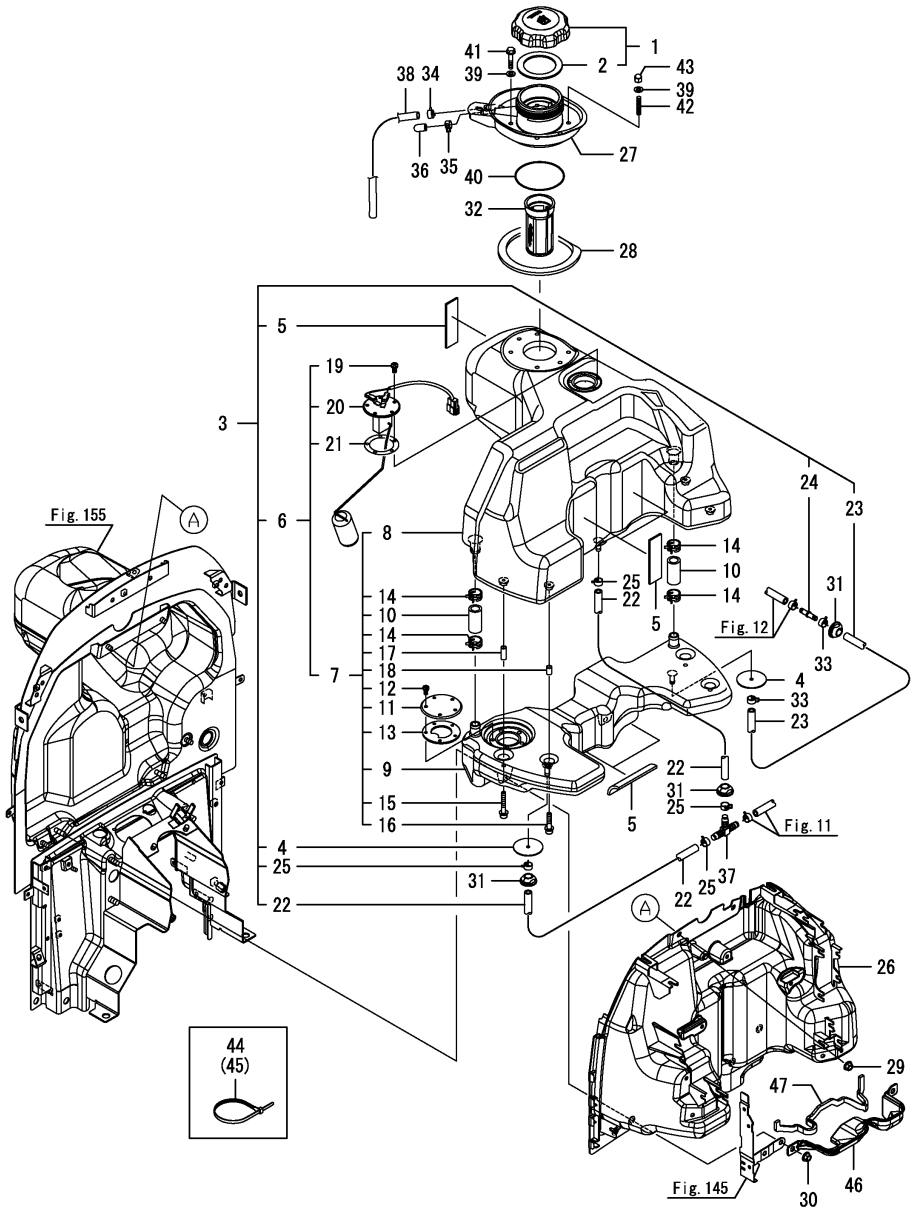

No.	Lev.	Parts No.	Description	Q'ty (A)	(B)	(C)	(D)	(E)	(F)	I	R
1	1	1A8330-04030	CAP ASSY,FILLER	1							
2	2	198200-04040	GASKET, FUEL CAP	1							
3	1	1A8420-04080	TANK KIT, FUEL	1							
4	2	198200-04020	INSULATOR, TANK LOW	2							
5	2	198200-04090	CUSHION, TANK F	5							
6	2	1A8420-04101	TANK KIT, FUEL	1							
7	3	1A8420-04111	TANK ASSY, FO	1							
8	4	1A8420-04121	TANK ASSY, FO A	1							
9	4	1A8400-04140	TANK ASSY, FO B	1							
10	4	1A8400-04160	HOSE, FO	2							
11	4	1A7180-04170	COVER	1							
12	4	1A7180-04180	SCREW, M5X14	5							
13	4	1A8060-04180	PACKING	1							
14	4	1A8420-04200	CLIP,HOSE	4							
15	4	1A8400-04210	BOLT, HEX SOCKET	2							
16	4	1A8400-04220	BOLT, HEX SOCKET	2							
17	4	1A8400-04240	COLLAR, 7X10X25	2							
18	4	1A8400-04250	COLLAR, 7X10X15	2							
19	3	1A7180-04180	SCREW, M5X14	5							
20	3	1A8400-56600	GAUGE ASSY, FUEL	1							
21	3	198200-56630	GASKET, FUEL GAUGE	1							
22	2	1A8400-04300	HOSE, FUEL 250	2							
23	2	1A8420-04320	HOSE, FUEL	1							
24	2	1A7180-04850	JOINT, FUEL HOSE	1							
25	2	114270-59010	CLAMP, HOSE 12	4							
26	1	1A8420-04093	COVER, FO TANK	1							
27	1	1A8420-04211	SUMP, FO	1							
28	1	1A8420-04261	GASKET, DRIP PAN	1							
29	1	194990-22140	NUT, M8	4							
30	1	194990-22140	NUT, M8	2							
31	1	194170-51210	GROMMET, 25/13	3							
32	1	101504-55101	STRAINER, FUEL	1							
33	1	114270-59010	CLAMP, HOSE 12	1							
34	1	114270-59010	CLAMP, HOSE 12	2							
35	1	114270-59010	CLAMP, HOSE 12	1							
36	1	129461-59580	CAP, FUEL	1							
37	1	119629-59910	JOINT, 3-WAY	1							
38	1	1A8425-88970	HOSE, DRAIN RL	1							
39	1	22190-060000	WASHER, SEAL 6	6							
40	1	24311-000850	O-RING, 1AP85.0	1							
41	1	26106-060302	BOLT, M6X 30 PLATED	3							
42	1	26216-060252	STUD, M6X 25	3							
43	1	26667-060002	NUT, CAP M6	3							
44	1	29622-250001	BAND, RF250	1							
45	1	29622-250001	BAND, RF250	1							
46	1	1A8426-04110	COVER, FO TANK LOWER	1							
47	1	1A8426-04130	SEAL, COVER TANK	1							

Remarks
* This item is applicable to [(A)=F100336] or following machines(Refer to Fig.8).

N:Old ◄Yes/No► New, Q:Old ◄No/Yes► New, R:Old ◄Yes/Yes► New, S:Old ◄No/No► New, W:Add, Z:Discontinued, F:Interchangeable by set, K:Q'ty Change

Copyright (C) 2017 YANMAR GLOBAL CS CO., LTD. All RightsReserved.

Fig.9. FUEL TANK(CABIN)

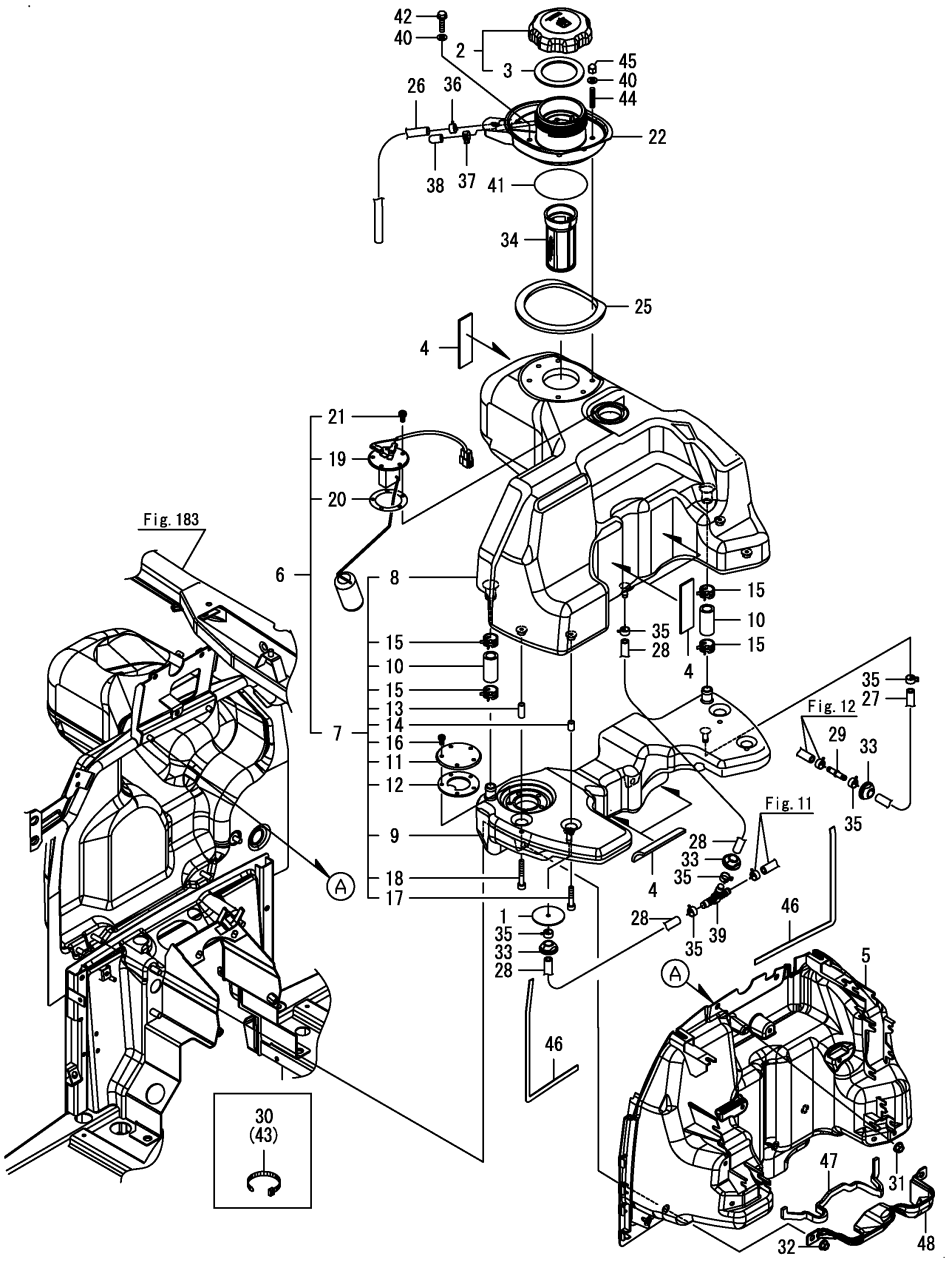

(A)=YT235Y, EU (D)=
(B)= (E)=
(C)= (F)=

No.	Lev.	Parts No.	Description	Q'ty (A)	(B)	(C)	(D)	(E)	(F)	I	R
1	1	198200-04020	INSULATOR, TANK LOW	2							
2	1	1A8330-04030	CAP ASSY,FILLER	1							
3	2	198200-04040	GASKET, FUEL CAP	1							
4	1	198200-04090	CUSHION, TANK F	5							
5	1	1A8420-04093	COVER, FO TANK	1							
6	1	1A8420-04101	TANK KIT, FUEL	1							
7	2	1A8420-04111	TANK ASSY, FO	1							
8	3	1A8420-04121	TANK ASSY, FO A	1							
9	3	1A8400-04140	TANK ASSY, FO B	1							
10	3	1A8400-04160	HOSE, FO	2							
11	3	1A7180-04170	COVER	1							
12	3	1A8060-04180	PACKING	1							
13	3	1A8400-04240	COLLAR, 7X10X25	2							
14	3	1A8400-04250	COLLAR, 7X10X15	2							
15	3	1A8420-04200	CLIP,HOSE	4							
16	3	1A7180-04180	SCREW, M5X14	5							
17	3	1A8400-04220	BOLT, HEX SOCKET	2							
18	3	1A8400-04210	BOLT, HEX SOCKET	2							
19	2	1A8400-56600	GAUGE ASSY, FUEL	1							
20	2	198200-56630	GASKET, FUEL GAUGE	1							
21	2	1A7180-04180	SCREW, M5X14	5							
22	1	1A8421-04211	SUMP, FO	1							
25	1	1A8420-04261	GASKET, DRIP PAN	1							
26	1	1A8425-88970	HOSE, DRAIN RL	1							
27	1	1A8420-04320	HOSE, FUEL	1							
28	1	1A8470-04600	HOSE, FUEL 250	2							
29	1	1A7180-04850	JOINT, FUEL HOSE	1							
30	1	29622-250001	BAND, RF250	1							
31	1	194990-22140	NUT, M8	4							
32	1	194990-22140	NUT, M8	2							
33	1	194170-51210	GROMMET, 25/13	3							
34	1	101504-55101	STRAINER, FUEL	1							
35	1	114270-59010	CLAMP, HOSE 12	6							
36	1	114270-59010	CLAMP, HOSE 12	1							
37	1	114270-59010	CLAMP, HOSE 12	1							
38	1	129461-59580	CAP, FUEL	1							
39	1	119629-59910	JOINT, 3-WAY	1							
40	1	22190-060000	WASHER, SEAL 6	6							
41	1	24311-000850	O-RING, 1AP85.0	1							
42	1	26106-060302	BOLT, M6X 30 PLATED	3							
43	1	29622-250001	BAND, RF250	1							
44	1	26216-060252	STUD, M6X 25	3							
45	1	26667-060002	NUT, CAP M6	3							
46	1	1A8426-04130	SEAL, COVER TANK	2							
47	1	1A8426-04110	COVER, FO TANK LOWER	1							
48	1	1A8426-04130	SEAL, COVER TANK	1							

Remarks
* This item is applicable to [(A)=F100335] or previous machines(Refer to Fig.232).

N:Old $\xleftrightarrow[\text{No}]{\text{Yes}}$ New, Q:Old $\xleftrightarrow[\text{Yes}]{\text{No}}$ New, R:Old $\xleftrightarrow[\text{Yes}]{\text{Yes}}$ New, S:Old $\xleftrightarrow[\text{No}]{\text{No}}$ New, W:Add, Z:Discontinued, F:Interchangeable by set, K:Q'ty Change

Copyright (C) 2017 YANMAR GLOBAL CS CO., LTD. All RightsReserved.

Fig.232. (9A)FUEL TANK(CABIN)

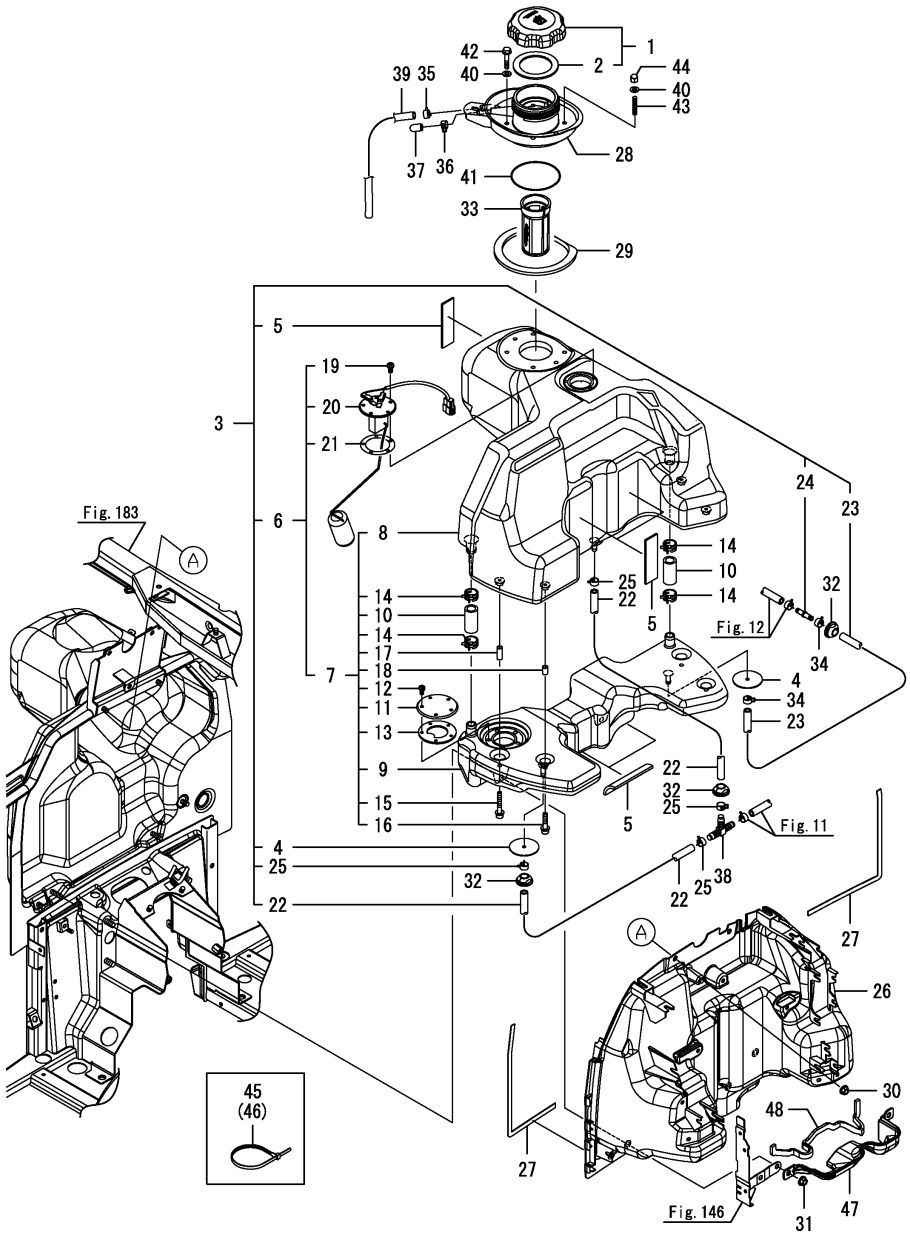

(A)=YT235Y, EU
(B)=
(C)=
(D)=
(E)=
(F)=

No.	Lev.	Parts No.	Description	Q'ty (A)	(B)	(C)	(D)	(E)	(F)	I	R
1	1	1A8330-04030	CAP ASSY,FILLER	1							
2	2	198200-04040	GASKET, FUEL CAP	1							
3	1	1A8420-04080	TANK KIT, FUEL	1							
4	2	198200-04020	INSULATOR, TANK LOW	2							
5	2	198200-04090	CUSHION, TANK F	5							
6	2	1A8420-04101	TANK KIT, FUEL	1							
7	3	1A8420-04111	TANK ASSY, FO	1							
8	4	1A8420-04121	TANK ASSY, FO A	1							
9	4	1A8400-04140	TANK ASSY, FO B	1							
10	4	1A8400-04160	HOSE, FO	2							
11	4	1A7180-04170	COVER	1							
12	4	1A7180-04180	SCREW, M5X14	5							
13	4	1A8060-04180	PACKING	1							
14	4	1A8420-04200	CLIP,HOSE	4							
15	4	1A8400-04210	BOLT, HEX SOCKET	2							
16	4	1A8400-04220	BOLT, HEX SOCKET	2							
17	4	1A8400-04240	COLLAR, 7X10X25	2							
18	4	1A8400-04250	COLLAR, 7X10X15	2							
19	3	1A7180-04180	SCREW, M5X14	5							
20	3	1A8400-56600	GAUGE ASSY, FUEL	1							
21	3	198200-56630	GASKET, FUEL GAUGE	1							
22	2	1A8400-04300	HOSE, FUEL 250	2							
23	2	1A8420-04320	HOSE, FUEL	1							
24	2	1A7180-04850	JOINT, FUEL HOSE	1							
25	2	114270-59010	CLAMP, HOSE 12	4							
26	1	1A8420-04093	COVER, FO TANK	1							
27	1	1A8426-04130	SEAL, COVER TANK	2							
28	1	1A8421-04211	SUMP, FO	1							
29	1	1A8420-04261	GASKET, DRIP PAN	1							
30	1	194990-22140	NUT, M8	2							
31	1	194990-22140	NUT, M8	4							
32	1	194170-51210	GROMMET, 25/13	3							
33	1	101504-55101	STRAINER, FUEL	1							
34	1	114270-59010	CLAMP, HOSE 12	1							
35	1	114270-59010	CLAMP, HOSE 12	1							
36	1	114270-59010	CLAMP, HOSE 12	2							
37	1	129461-59580	CAP, FUEL	1							
38	1	119629-59910	JOINT, 3-WAY	1							
39	1	1A8425-88970	HOSE, DRAIN RL	1							
40	1	22190-060000	WASHER, SEAL 6	6							
41	1	24311-000850	O-RING, 1AP85.0	1							
42	1	26106-060302	BOLT, M6X 30 PLATED	3							
43	1	26216-060252	STUD, M6X 25	3							
44	1	26667-060002	NUT, CAP M6	3							
45	1	29622-250001	BAND, RF250	1							
46	1	29622-250001	BAND, RF250	1							
47	1	1A8426-04110	COVER, FO TANK LOWER	1							
48	1	1A8426-04130	SEAL, COVER TANK	1							

Remarks
* This item is applicable to [(A)=F100336] or following machines(Refer to Fig.9).

N:Old ←Yes/No→ New, Q:Old ←No/Yes→ New, R:Old ←Yes/Yes→ New, S:Old ←No/No→ New, W:Add, Z:Discontinued, F:Interchangeable by set, K:Q'ty Change

Copyright (C) 2017 YANMAR GLOBAL CS CO., LTD. All RightsReserved.

Fig.10. FUEL COOLER

(A)=YT235Y, EU
(B)=
(C)=
(D)=
(E)=
(F)=

No.	Lev.	Parts No.	Description	Q'ty (A)	(B)	(C)	(D)	(E)	(F)	I	R
1	1	1A7601-00650	COOLER, FO H40	1							
2	1	194990-22140	NUT, M8	2							

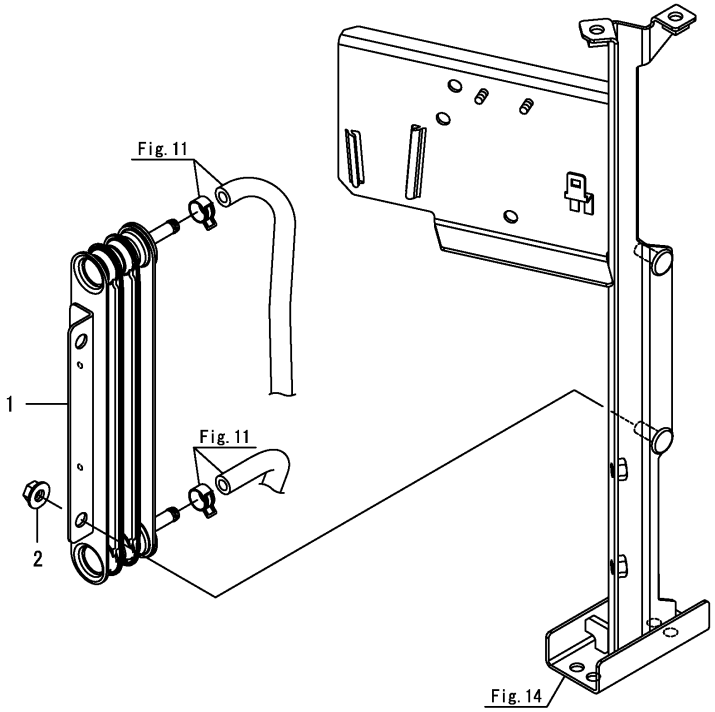

N:Old $\xleftrightarrow[\text{No}]{\text{Yes}}$ New, Q:Old $\xleftrightarrow[\text{Yes}]{\text{No}}$ New, R:Old $\xleftrightarrow[\text{Yes}]{\text{Yes}}$ New, S:Old $\xleftrightarrow[\text{No}]{\text{No}}$ New, W:Add, Z:Discontinued, F:Interchangeable by set, K:Q'ty Change

Copyright (C) 2017 YANMAR GLOBAL CS CO., LTD. All RightsReserved.

Fig.11. FUEL HOSE(1)

(A)=YT235Y, EU
(B)=
(C)=
(D)=
(E)=
(F)=

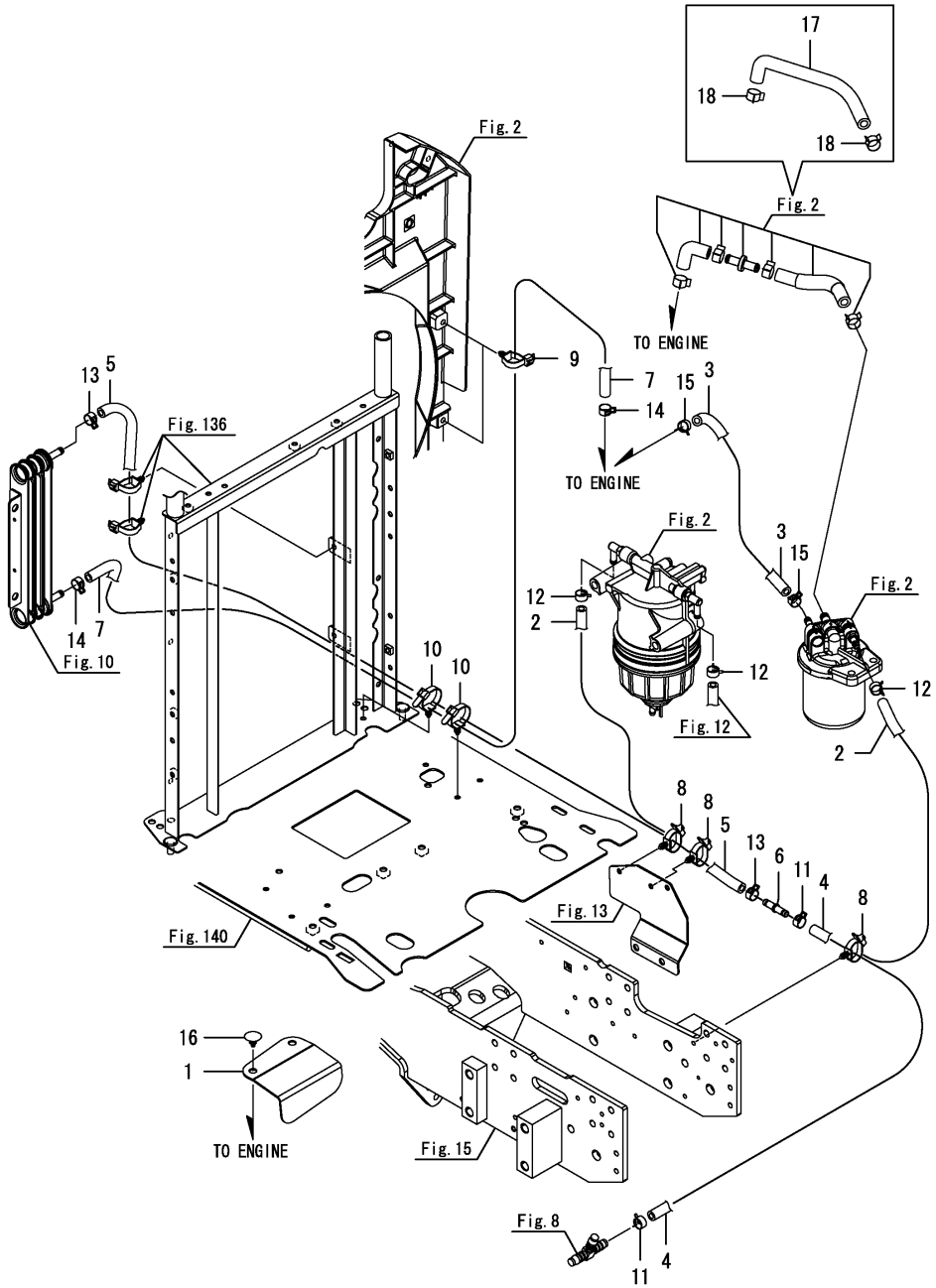

No.	Lev.	Parts No.	Description	Q'ty (A)	(B)	(C)	(D)	(E)	(F)	I	R
1	1	1A8420-04350	COVER, HOSE	1							
2	1	1A8060-04530	HOSE, FUEL 1000	1							
3	1	1A8042-04540	HOSE, FUEL 360	1							
4	1	1A8470-04650	HOSE, FUEL 850	1							
5	1	1A8470-04660	HOSE, FUEL 950	1							
6	1	1A7180-04850	JOINT, FUEL HOSE	1							
7	1	1A8066-04920	HOSE, FUEL 1100	1							
8	1	1A8275-51670	CLIP, M8 HOLE	3							
9	1	1A8275-51670	CLIP, M8 HOLE	2							
10	1	1A8275-51670	CLIP, M8 HOLE	2							
11	1	114270-59010	CLAMP, HOSE 12	2							
12	1	114270-59010	CLAMP, HOSE 12	3							
13	1	114270-59010	CLAMP, HOSE 12	2							
14	1	114270-59010	CLAMP, HOSE 12	2							
15	1	114270-59010	CLAMP, HOSE 12	2							
16	1	1E6760-74150	CAP, HOLE 8	2							
17	1	1A8420-04610	HOSE, FUEL	1						W	
	(A=F100238)										
18	1	23080-015000	CLAMP, 15	2						W	
	(A=F100238)										

N:Old $\xleftarrow[\text{No}]{\text{Yes}}$ New, Q:Old $\xleftarrow[\text{Yes}]{\text{No}}$ New, R:Old $\xleftarrow[\text{Yes}]{\text{Yes}}$ New, S:Old $\xleftarrow[\text{No}]{\text{No}}$ New, W:Add, Z:Discontinued, F:Interchangeable by set, K:Q'ty Change

Copyright (C) 2017 YANMAR GLOBAL CS CO., LTD. All RightsReserved.

Fig.12. FUEL HOSE(2)

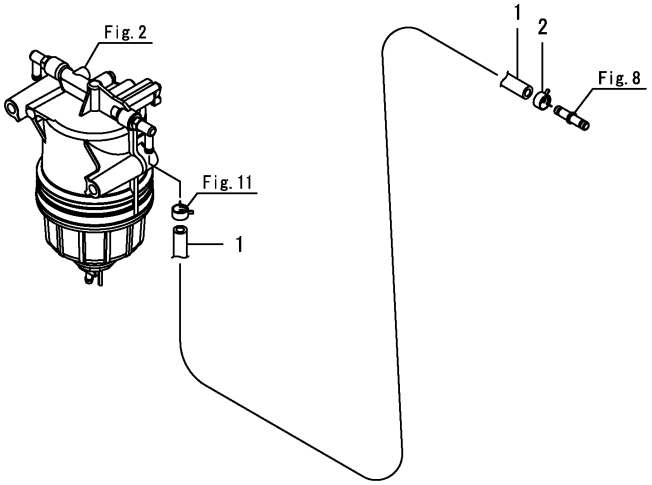

(A)=YT235Y, EU
(B)=
(C)=
(D)=
(E)=
(F)=

No.	Lev.	Parts No.	Description	Q'ty (A)	(B)	(C)	(D)	(E)	(F)	I	R
1	1	1A8420-04940	HOSE, FUEL 800	1							
2	1	114270-59010	CLAMP, HOSE 12	1							

N:Old ◄Yes/No► New, Q:Old ◄No/Yes► New, R:Old ◄Yes/Yes► New, S:Old ◄No/No► New, W:Add, Z:Discontinued, F:Interchangeable by set, K:Q'ty Change

Copyright (C) 2017 YANMAR GLOBAL CS CO., LTD. All RightsReserved.

Fig.13. FUEL FILTER

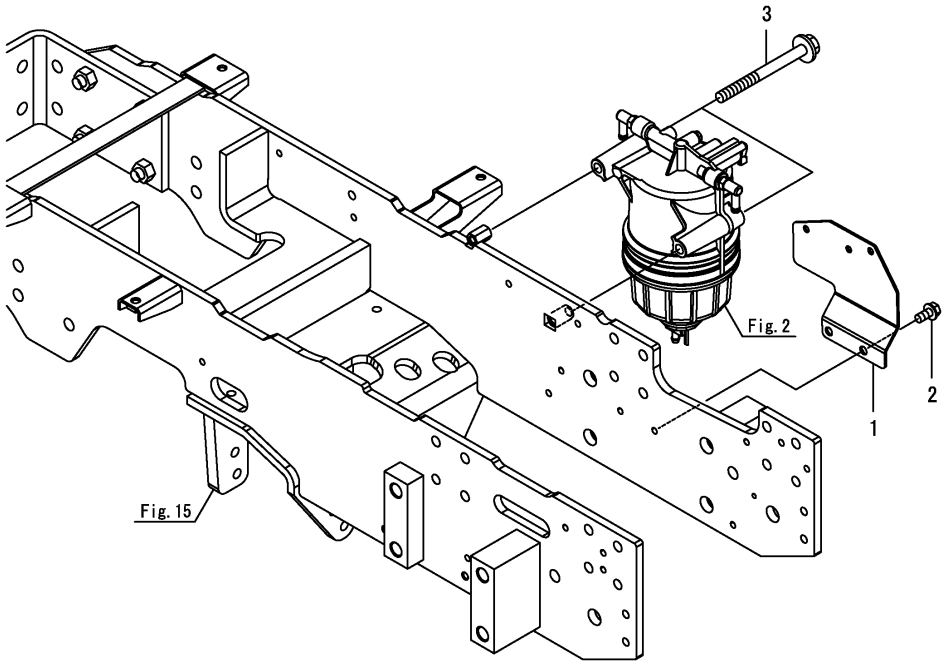

(A)=YT235Y, EU (D)=
(B)= (E)=
(C)= (F)=

No.	Lev.	Parts No.	Description	Q'ty (A)	(B)	(C)	(D)	(E)	(F)	I	R
1	1	1A8425-11450	STAY, FUEL HOSE	1							
2	1	26106-080162	BOLT, M8X 16 PLATED	2							
3	1	26106-080902	BOLT, M8X 90 PLATED	2							

N:Old $\xleftarrow[\text{No}]{\text{Yes}}$ New, Q:Old $\xleftarrow[\text{Yes}]{\text{No}}$ New, R:Old $\xleftarrow[\text{Yes}]{\text{Yes}}$ New, S:Old $\xleftarrow[\text{No}]{\text{No}}$ New, W:Add, Z:Discontinued, F:Interchangeable by set, K:Q'ty Change

Copyright (C) 2017 YANMAR GLOBAL CS CO., LTD. All RightsReserved.

Fig.14. AIR CLEANER

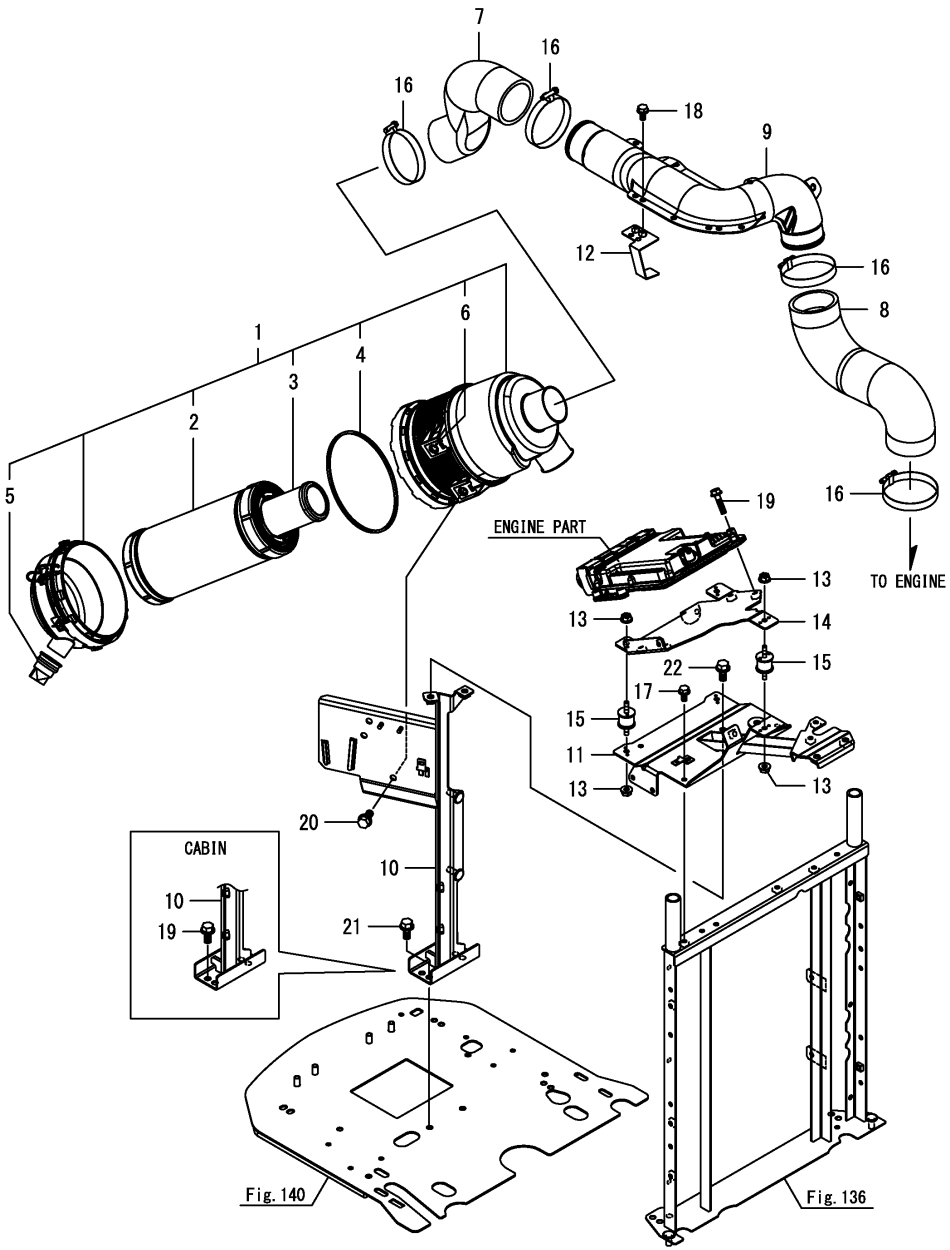

(A)=YT235Y, EU (D)=
(B)= (E)=
(C)= (F)=

No.	Lev.	Parts No.	Description	Q'ty (A)	(B)	(C)	(D)	(E)	(F)	I	R
1	1	1A8425-05100	CLEANER ASSY,5.5IN D	1							
2	2	1A8240-05110	ELEMENT ASSY, OUTER	1							
3	2	1A8240-05120	ELEMENT ASSY, INNER	1							
4	2	1A8240-05130	GASKET, AIR CLEANOR	1							
5	2	1A8240-05170	VALVE, UNLOADER	1							
6	2	1A8240-05180	NUT, CLIP M8	2							
7	1	1A8420-06010	HOSE, AIR INTAKE A	1							
8	1	1A8420-06020	HOSE, AIR INTAKE B	1							
9	1	1A8420-06150	PIPE, INTAKE	1							
10	1	1A8420-06202	BRACKET ASSY,CLEANER	1							
11	1	1A8420-06354	BRACKET ASSY, CR-ECU	1							
12	1	1A8420-06400	STAY ASSY, GUARD	1							
13	1	194990-22130	NUT, M6	6							
14	1	1A8420-58102	BRACKET ASSY, CR-ECU	1							
15	1	1A8420-58151	RUBBER, MOUNT	3							
16	1	23000-080000	CLAMP, 80	4							
17	1	26106-060122	BOLT, M6X 12 PLATED	2							
18	1	26106-060122	BOLT, M6X 12 PLATED	2							
19	1	26106-060252	BOLT, M6X 25 PLATED	4							
20	1	26106-080162	BOLT, M8X 16 PLATED	2							
21	1	26106-080162	BOLT, M8X 16 PLATED	2							
22	1	26106-080162	BOLT, M8X 16 PLATED	2							

N:Old $\xleftrightarrow[\text{No}]{\text{Yes}}$ New, Q:Old $\xleftrightarrow[\text{Yes}]{\text{No}}$ New, R:Old $\xleftrightarrow[\text{Yes}]{\text{Yes}}$ New, S:Old $\xleftrightarrow[\text{No}]{\text{No}}$ New, W:Add, Z:Discontinued, F:Interchangeable by set, K:Q'ty Change

Copyright (C) 2017 YANMAR GLOBAL CS CO., LTD. All RightsReserved.

Fig.15. FRONT BRACKET

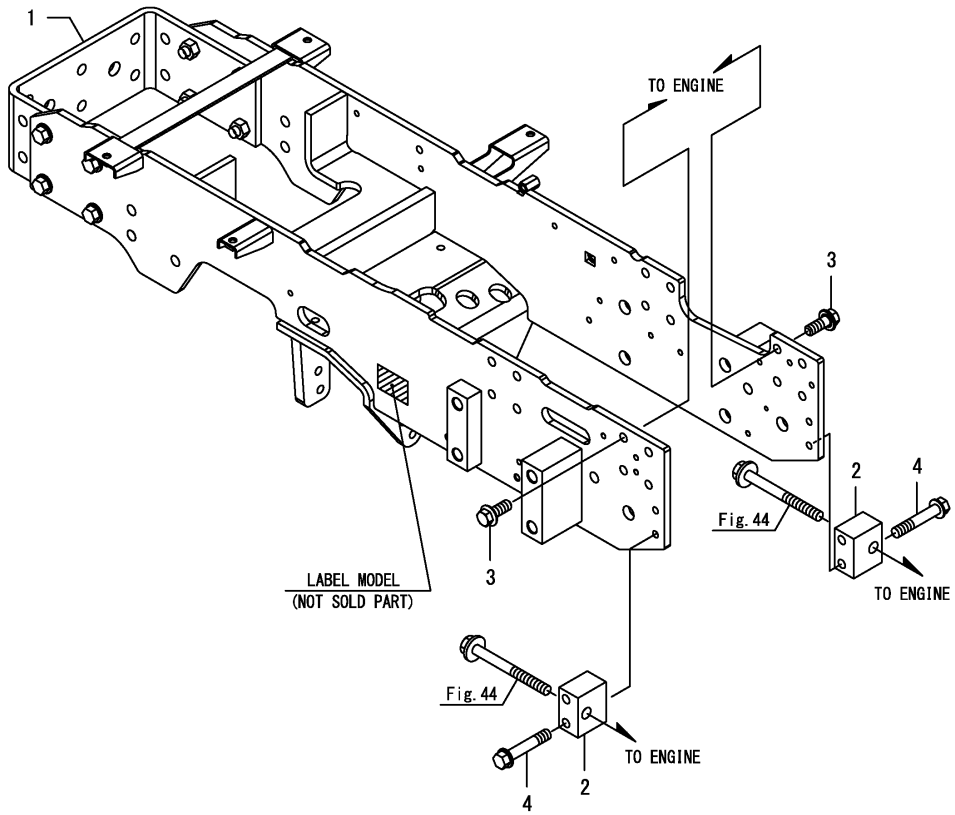

(A)=YT235Y, EU (D)=
(B)= (E)=
(C)= (F)=

No.	Lev.	Parts No.	Description	Q'ty (A)	(B)	(C)	(D)	(E)	(F)	I	R
1	1	1A8426-11010	M ASSY, BRACKET AXLE	1							
2	1	1A8420-11210	STAY, MOUNTING FLANG	2							
3	1	198208-11310	BOLT, M10X25	16							
4	1	26106-100552	BOLT, M10X 55 PLATED	4							

N:Old $\xleftarrow[\text{No}]{\text{Yes}}$ New, Q:Old $\xleftarrow[\text{Yes}]{\text{No}}$ New, R:Old $\xleftarrow[\text{Yes}]{\text{Yes}}$ New, S:Old $\xleftarrow[\text{No}]{\text{No}}$ New, W:Add, Z:Discontinued, F:Interchangeable by set, K:Q'ty Change

Copyright (C) 2017 YANMAR GLOBAL CS CO., LTD. All RightsReserved.

Fig.16. CENTER PIN SUPPORT

(A)=YT235Y, EU
(B)=
(C)=
(D)=
(E)=
(F)=

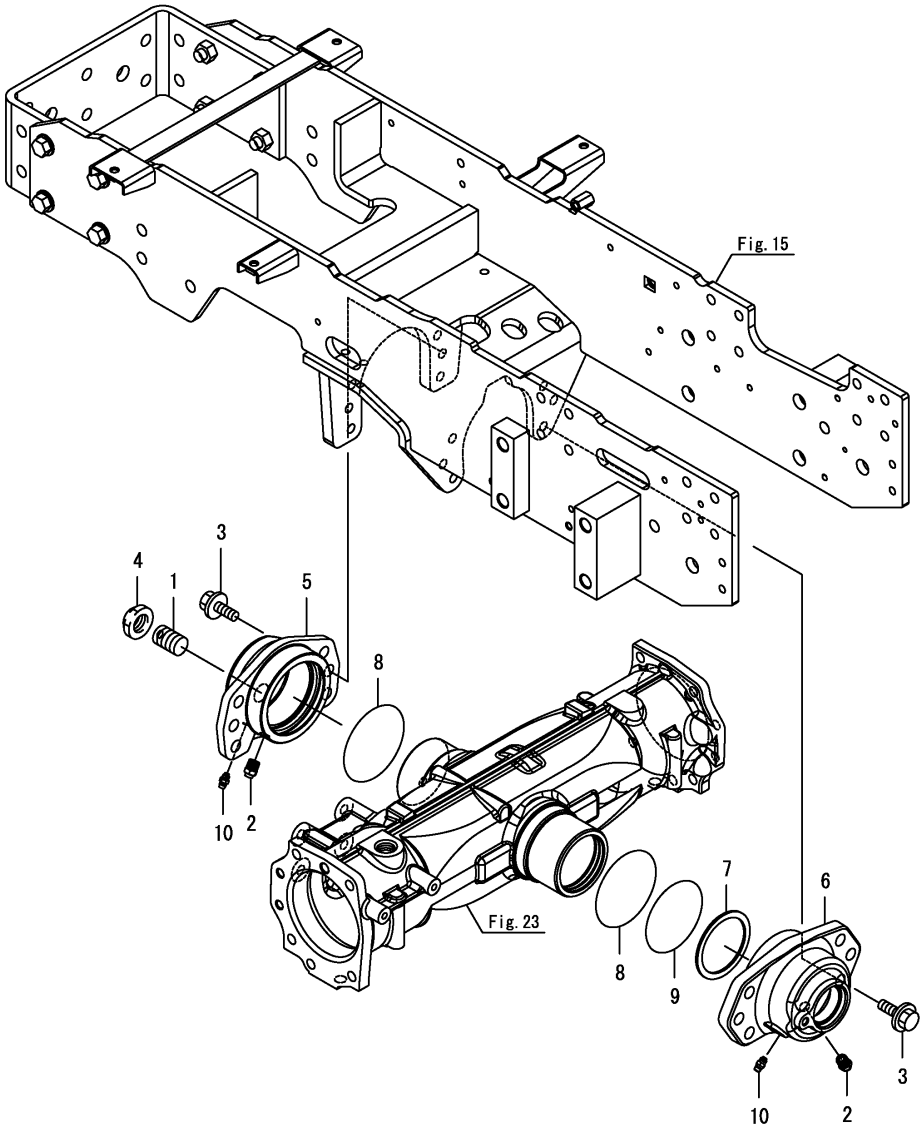

No.	Lev.	Parts No.	Description	Q'ty (A)	(B)	(C)	(D)	(E)	(F)	I	R
1	1	1A8071-13450	BOLT, ADJUST	1							
2	1	1A7815-32810	BREATHER, GREASE	2							
3	1	26106-120252	BOLT, M12X 25 PLATED	12							
4	1	26776-200002	NUT, LOCK M20	1							
5	1	1A8400-13150	SUPPORT ASSY, CENTER	1							
6	1	1A8400-13161	SUPPORT ASSY, CENTER	1							
7	1	1A8400-13480	WASHER, 62X75X2.3	1							
8	1	24311-000800	O-RING, 1AP80.0	2							
9	1	24321-000750	O-RING, 1AG75.0	1							
10	1	24761-010000	NIPPLE, GREASE M6F	2							

N:Old $\xleftarrow[\text{No}]{\text{Yes}}$ New, Q:Old $\xleftarrow[\text{Yes}]{\text{No}}$ New, R:Old $\xleftarrow[\text{Yes}]{\text{Yes}}$ New, S:Old $\xleftarrow[\text{No}]{\text{No}}$ New, W:Add, Z:Discontinued, F:Interchangeable by set, K:Q'ty Change

Copyright (C) 2017 YANMAR GLOBAL CS CO., LTD. All RightsReserved.

Fig.17. TIE ROD

(A)=YT235Y, EU
(B)=
(C)=
(D)=
(E)=
(F)=

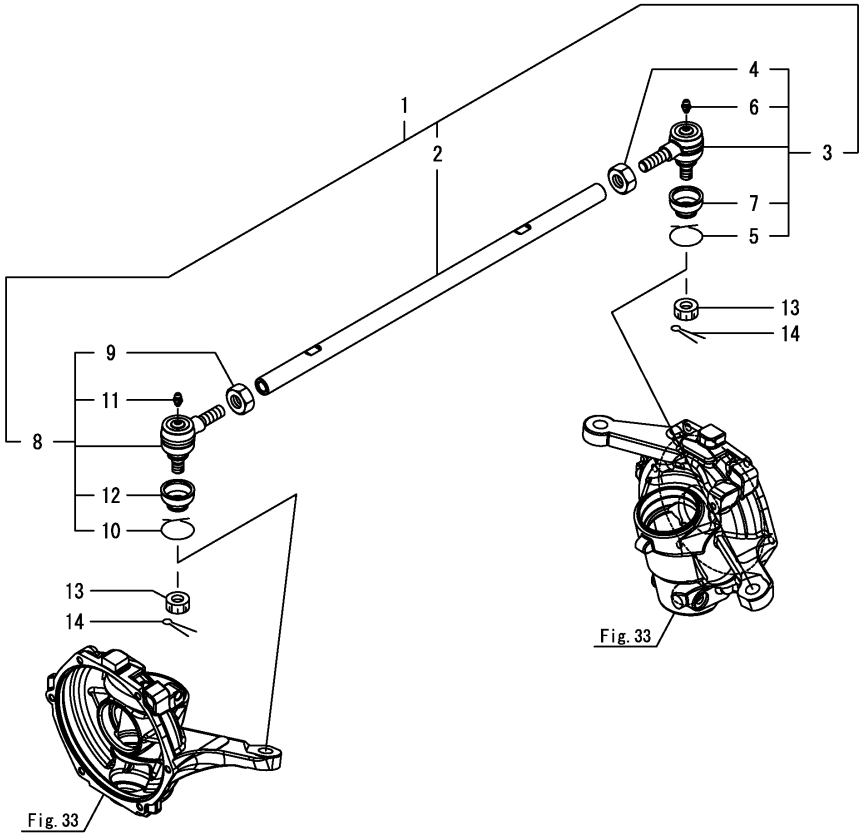

No.	Lev.	Parts No.	Description	Q'ty (A)	(B)	(C)	(D)	(E)	(F)	I	R
1	1	1A8310-12330	TIE-ROD ASSY	1							
2	2	1A8310-12310	TIE-ROD	1							
3	2	1A8310-12510	END ASSY, RH-A	1							
4	3	1A8310-12540	NUT, 16 R	1							
5	3	1A8310-12610	BAND, BOOTS	1							
6	3	1A8310-12620	NIPPLE, GREASE	1							
7	3	1A8310-12630	COVER, DUST	1							
8	2	1A8310-12550	END ASSY, LH	1							
9	3	1A8310-12580	NUT, 16 L	1							
10	3	1A8310-12610	BAND, BOOTS	1							
11	3	1A8310-12620	NIPPLE, GREASE	1							
12	3	1A8310-12630	COVER, DUST	1							
13	1	194180-12471	NUT, CASTLE M16	2							
14	1	22417-400400	PIN, COTTER 4.0X40	2							

N:Old $\xleftarrow[\text{No}]{\text{Yes}}$ New, Q:Old $\xleftarrow[\text{Yes}]{\text{No}}$ New, R:Old $\xleftarrow[\text{Yes}]{\text{Yes}}$ New, S:Old $\xleftarrow[\text{No}]{\text{No}}$ New, W:Add, Z:Discontinued, F:Interchangeable by set, K:Q'ty Change

Copyright (C) 2017 YANMAR GLOBAL CS CO., LTD. All RightsReserved.

Fig.18. RING GEAR

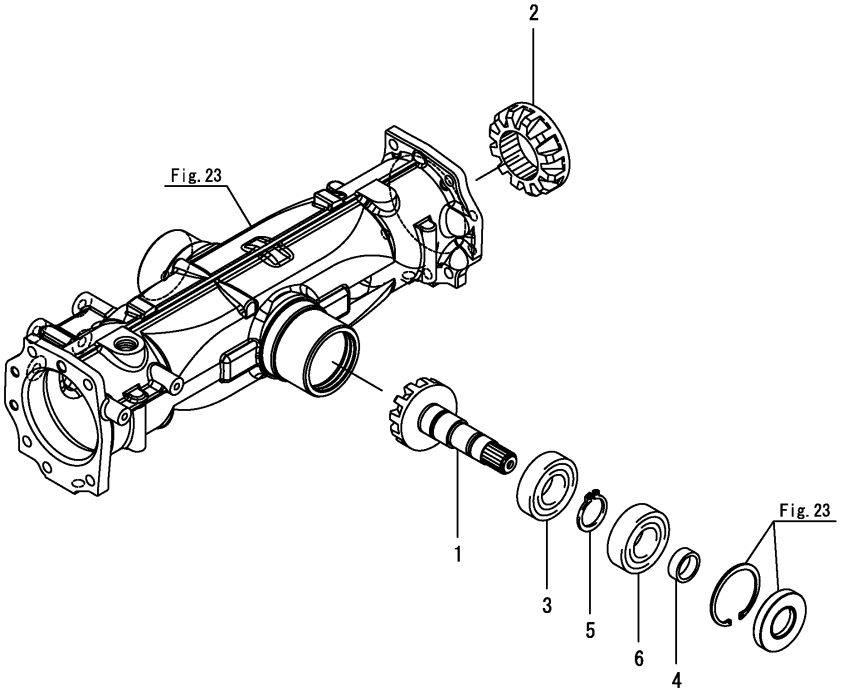

(A)=YT235Y, EU
(B)=
(C)=
(D)=
(E)=
(F)=

No.	Lev.	Parts No.	Description	Q'ty (A)	(B)	(C)	(D)	(E)	(F)	I	R
1	1	1A8310-13110	PINION, DRIVE 17	1							
2	1	1A8310-13120	GEAR, RING 25	1							
3	1	194555-25870	BEARING, TMB206CC3	1							
4	1	1E6190-54080	SLEEVE, SI 25X30X13	1							
5	1	22242-000300	RING, 30	1							
6	1	24101-063054	BEARING, BALL 6305	1							

N:Old $\xleftrightarrow[\text{No}]{\text{Yes}}$ New, Q:Old $\xleftrightarrow[\text{Yes}]{\text{No}}$ New, R:Old $\xleftrightarrow[\text{Yes}]{\text{Yes}}$ New, S:Old $\xleftrightarrow[\text{No}]{\text{No}}$ New, W:Add, Z:Discontinued, F:Interchangeable by set, K:Q'ty Change

Copyright (C) 2017 YANMAR GLOBAL CS CO., LTD. All RightsReserved.

Fig.19. DIFFERENTIAL GEAR

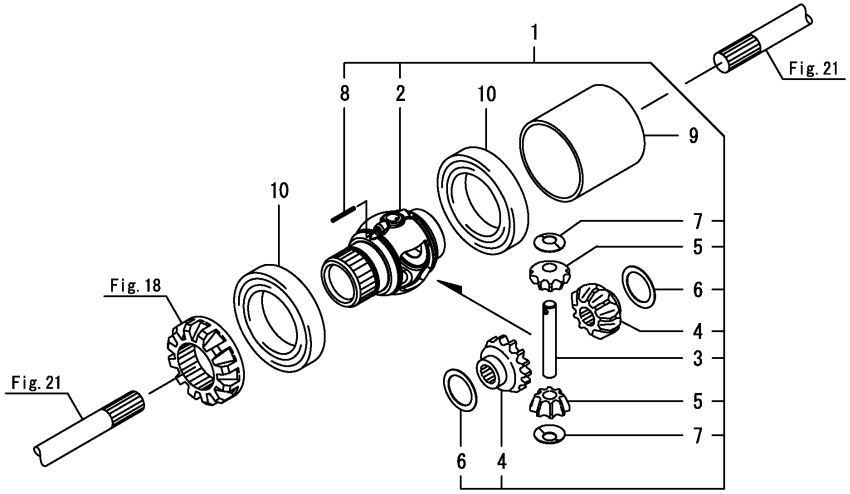

(A)=YT235Y, EU
(B)=
(C)=
(D)=
(E)=
(F)=

No.	Lev.	Parts No.	Description	Q'ty (A)	(B)	(C)	(D)	(E)	(F)	I	R
1	1	1A8310-13200	DIFFERENTIAL, FRONT	1							
2	2	1A8310-13210	CASE, DIFFERENTIAL	1							
3	2	198200-13220	SHAFT, DIFF.PINION	1							
4	2	1A8310-13230	GEAR, DIFF.SIDE	2							
5	2	1A8310-13240	GEAR, DIFF.PINION 10	2							
6	2	1A8310-13260	LINER, SIDE GEAR	2							
7	2	1A8310-13270	LINER, DIFF.PINION	2							
8	2	22351-040040	PIN, SPRING 4.0X40	1							
9	1	1A8310-13250	COLLAR, DIFFERENTIAL	1							
10	1	24101-060114	BEARING, BALL 6011	2							

N:Old $\xleftarrow[\text{No}]{\text{Yes}}$ New, Q:Old $\xleftarrow[\text{Yes}]{\text{No}}$ New, R:Old $\xleftarrow[\text{Yes}]{\text{Yes}}$ New, S:Old $\xleftarrow[\text{No}]{\text{No}}$ New, W:Add, Z:Discontinued, F:Interchangeable by set, K:Q'ty Change

Copyright (C) 2017 YANMAR GLOBAL CS CO., LTD. All RightsReserved.

Fig.20. PROPELLER SHAFT

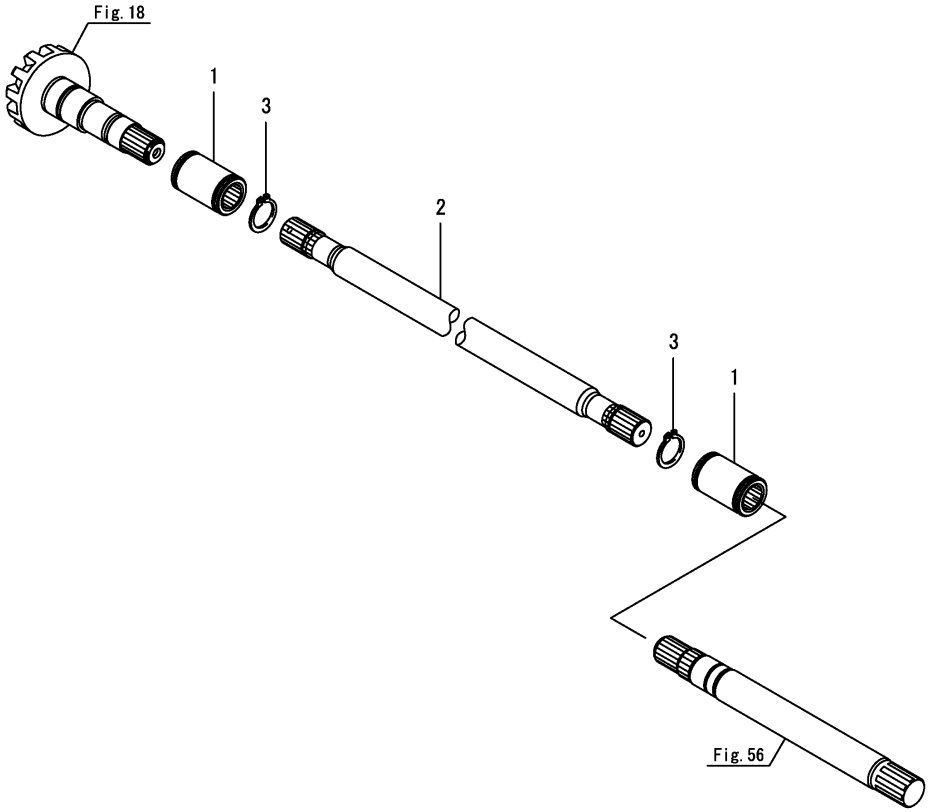

(A)=YT235Y, EU
(B)=
(C)=
(D)=
(E)=
(F)=

No.	Lev.	Parts No.	Description	Q'ty (A)	(B)	(C)	(D)	(E)	(F)	I	R
1	1	1A8310-13280	COUPLING	2							
2	1	1A8405-13310	SHAFT, PROPELLER	1							
3	1	22242-000220	RING, 22	2							

N:Old $\xleftrightarrow[\text{No}]{\text{Yes}}$ New, Q:Old $\xleftrightarrow[\text{Yes}]{\text{No}}$ New, R:Old $\xleftrightarrow[\text{Yes}]{\text{Yes}}$ New, S:Old $\xleftrightarrow[\text{No}]{\text{No}}$ New, W:Add, Z:Discontinued, F:Interchangeable by set, K:Q'ty Change

Copyright (C) 2017 YANMAR GLOBAL CS CO., LTD. All RightsReserved.

Fig.21. FRONT SHAFT(1)

(A)=YT235Y, EU
(B)=
(C)=
(D)=
(E)=
(F)=

No.	Lev.	Parts No.	Description	Q'ty (A)	(B)	(C)	(D)	(E)	(F)	I	R
1	1	1A8310-13510	SHAFT, FRONT 1ST R	1							
2	1	1A8310-13520	PINION, 1ST SHAFT 14	2							
3	1	1A8310-13530	SHAFT, FRONT 1ST L	1							
4	1	24101-062074	BEARING, BALL 6207	2							

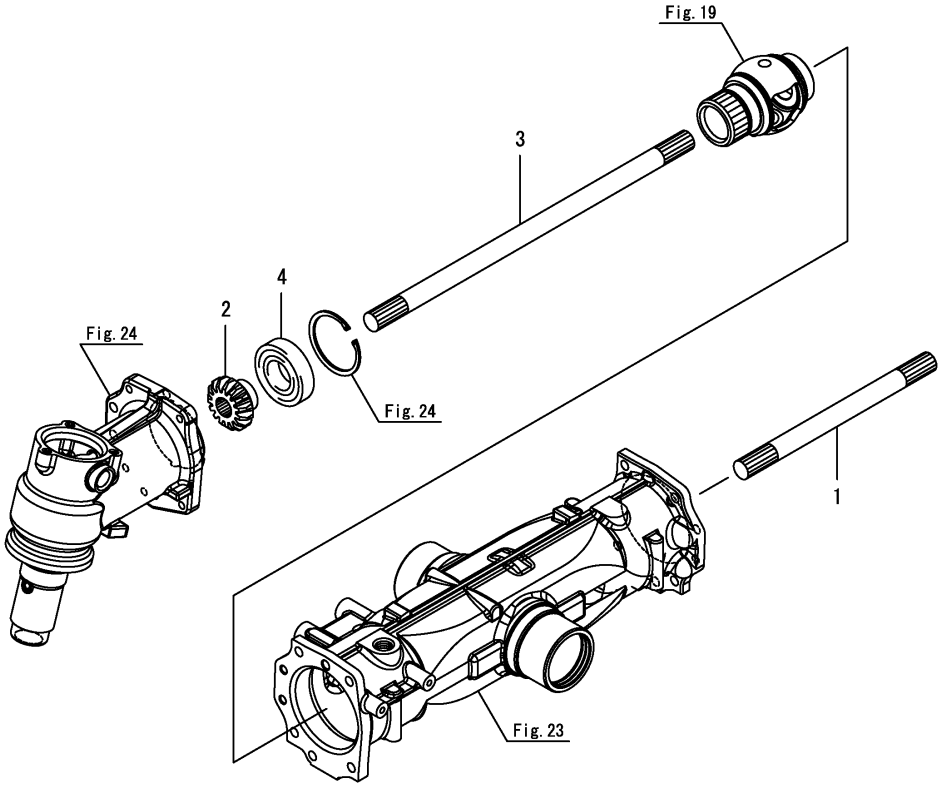

N:Old $\xleftarrow[\text{No}]{\text{Yes}}$ New, Q:Old $\xleftarrow[\text{Yes}]{\text{No}}$ New, R:Old $\xleftarrow[\text{Yes}]{\text{Yes}}$ New, S:Old $\xleftarrow[\text{No}]{\text{No}}$ New, W:Add, Z:Discontinued, F:Interchangeable by set, K:Q'ty Change

Copyright (C) 2017 YANMAR GLOBAL CS CO., LTD. All RightsReserved.

Fig.22. DIPSTICK

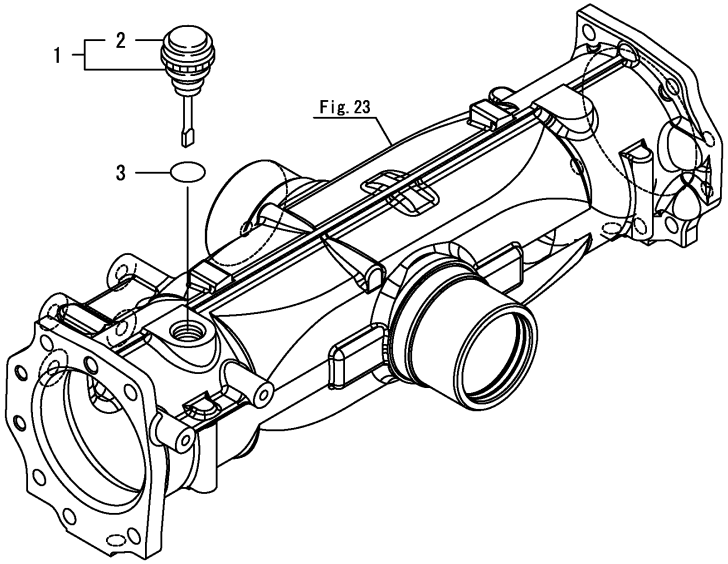

(A)=YT235Y, EU
(B)=
(C)=
(D)=
(E)=
(F)=

No.	Lev.	Parts No.	Description	Q'ty (A)	(B)	(C)	(D)	(E)	(F)	I	R
1	1	1C6900-23020	BREATHER, KNOCK	1							
2	2	1E8660-53100	BREATHER	1							
3	1	24341-000180	O-RING, 1AS18.0	1							

N:Old $\xleftarrow[\text{No}]{\text{Yes}}$ New, Q:Old $\xleftarrow[\text{Yes}]{\text{No}}$ New, R:Old $\xleftarrow[\text{Yes}]{\text{Yes}}$ New, S:Old $\xleftarrow[\text{No}]{\text{No}}$ New, W:Add, Z:Discontinued, F:Interchangeable by set, K:Q'ty Change

Copyright (C) 2017 YANMAR GLOBAL CS CO., LTD. All RightsReserved.

Fig.23. FRONT AXLE CASE

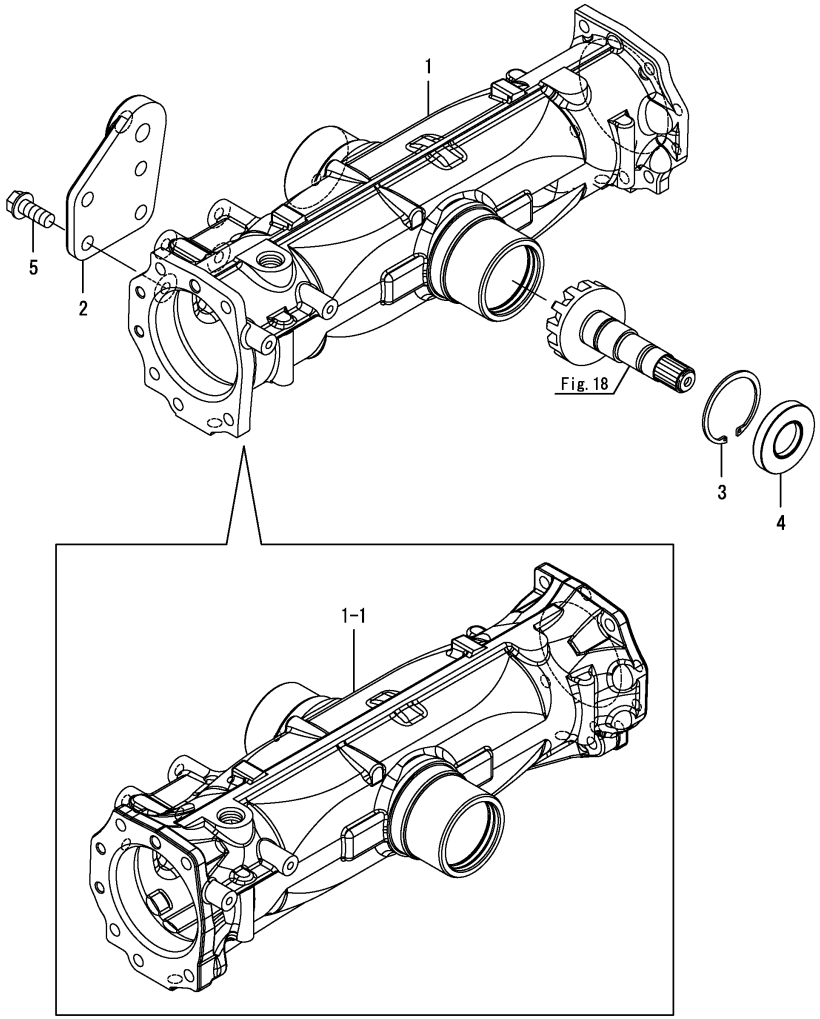

(A)=YT235Y, EU
(B)=
(C)=
(D)=
(E)=
(F)=

No.	Lev.	Parts No.	Description	Q'ty (A)	(B)	(C)	(D)	(E)	(F)	I	R
1	1	1A8400-13610	CASE, FRONT AXLE	1							
1-1	1	1A8446-13610	CASE, FRONT AXLE	1						F	1
	(A=F200026)										
2	1	1A8405-17210	BRACKET,PST CYLINDER	1							
3	1	22252-000620	RING, 62	1							
4	1	24421-306210	SEAL, OIL TC306210	1							
5	1	26106-120302	BOLT, M12X 30 PLATED	4							

Remarks
(1)No.1-1 is interchangeable with a set of Fig.24 No.7-1, 17.

N:Old $\frac{\text{Yes}}{\text{No}}$ New, Q:Old $\frac{\text{No}}{\text{Yes}}$ New, R:Old $\frac{\text{Yes}}{\text{Yes}}$ New, S:Old $\frac{\text{No}}{\text{No}}$ New, W:Add, Z:Discontinued, F:Interchangeable by set, K:Q'ty Change

Copyright (C) 2017 YANMAR GLOBAL CS CO., LTD. All RightsReserved.

Fig.24. FRONT GEAR CASE

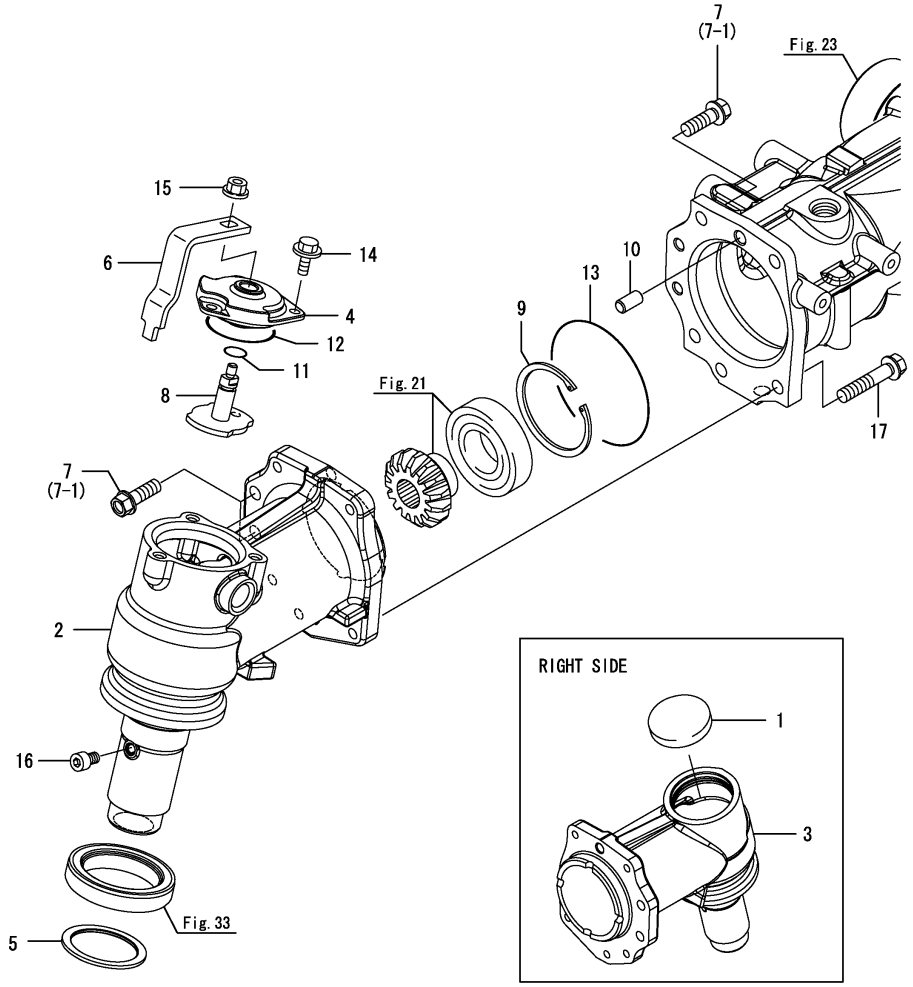

(A)=YT235Y, EU (D)=
(B)= (E)=
(C)= (F)=

No.	Lev.	Parts No.	Description	Q'ty (A)	(B)	(C)	(D)	(E)	(F)	I	R
1	1	177432-03450	PLUG	1							
2	1	1A8406-13710	CASE, FRONT GEAR L	1							
3	1	1A8430-13720	CASE, FRONT GEAR	1							
4	1	198200-13730	COVER, GEAR CASE	1							
5	1	1A8310-13730	WASHER, 50X63X2.5	2							
6	1	198200-13911	LINK, HI-GRIP	1							
7	1	1A8310-13910	BOLT, TENSION 10X30	14							
7-1	1	1A8310-13910	BOLT, TENSION 10X30	8						K	1
	(A=F200026)										
8	1	198280-13920	ARM, SWITCH	1							
9	1	22252-000720	RING, 72	2							
10	1	22312-100180	PIN, PARALLEL M10X18	2							
11	1	24311-000110	O-RING, 1AP11.0	1							
12	1	24321-000600	O-RING, 1AG60.0	1							
13	1	24321-000950	O-RING, 1AG95.0	2							
14	1	26106-080162	BOLT, M8X 16 PLATED	3							
15	1	26366-080002	NUT, M8	1							
16	1	26450-080122	BOLT, M8X 12	2							
17	1	1A8446-13620	BOLT, FLANGE M10X50	6						W	1
	(A=F200026)										

Remarks
(1)No.7-1, 17 is interchangeable with a set of Fig.23 No.1-1.

N:Old $\xleftarrow[\text{No}]{\text{Yes}}$ New, Q:Old $\xleftarrow[\text{Yes}]{\text{No}}$ New, R:Old $\xleftarrow[\text{Yes}]{\text{Yes}}$ New, S:Old $\xleftarrow[\text{No}]{\text{No}}$ New, W:Add, Z:Discontinued, F:Interchangeable by set, K:Q'ty Change

Copyright (C) 2017 YANMAR GLOBAL CS CO., LTD. All RightsReserved.

Fig.25. FRONT SHAFT(2)

(A)=YT235Y, EU
(B)=
(C)=
(D)=
(E)=
(F)=

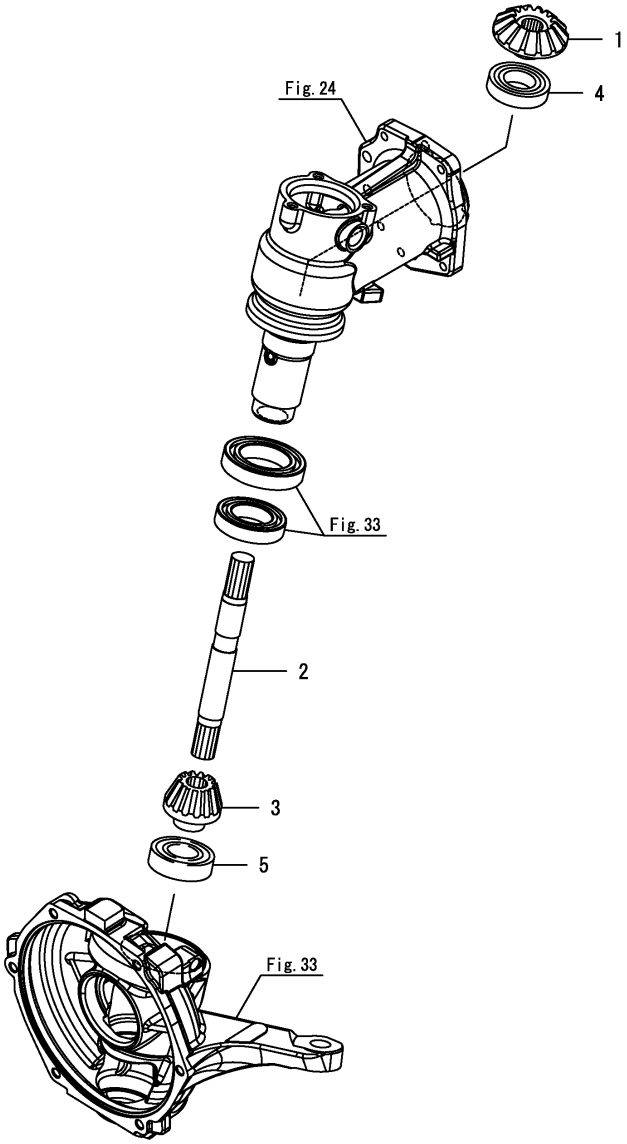

No.	Lev.	Parts No.	Description	Q'ty (A)	(B)	(C)	(D)	(E)	(F)	I	R
1	1	1A8310-13820	GEAR,FRONT 2ND SHAFT	2							
2	1	1A8310-14270	SHAFT, FRONT 2ND	2							
3	1	1A8310-14320	PINION, FRONT FINAL	2							
4	1	24101-062064	BEARING, BALL 6206	2							
5	1	24104-062064	BEARING, BALL 6206UU	2							

N:Old $\xleftarrow[\text{No}]{\text{Yes}}$ New, Q:Old $\xleftarrow[\text{Yes}]{\text{No}}$ New, R:Old $\xleftarrow[\text{Yes}]{\text{Yes}}$ New, S:Old $\xleftarrow[\text{No}]{\text{No}}$ New, W:Add, Z:Discontinued, F:Interchangeable by set, K:Q'ty Change

Copyright (C) 2017 YANMAR GLOBAL CS CO., LTD. All RightsReserved.

Fig.26. FRONT SPINDLE

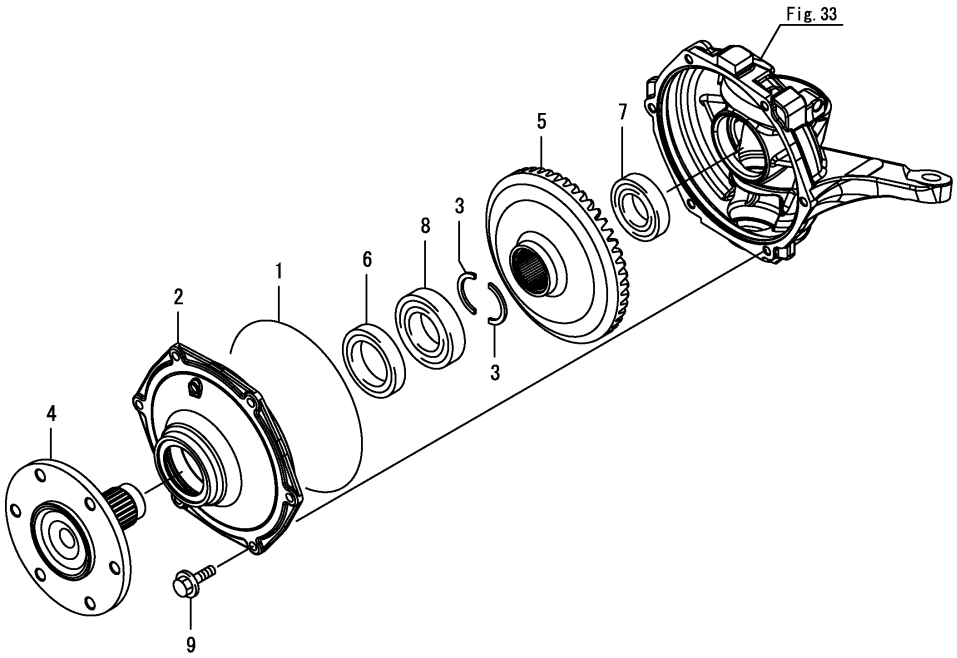

(A)=YT235Y, EU (D)=
(B)= (E)=
(C)= (F)=

No.	Lev.	Parts No.	Description	Q'ty (A)	(B)	(C)	(D)	(E)	(F)	I	R
1	1	194556-13790	O-RING, 190X2.7	2							
2	1	198200-14130-1	COVER, GEAR BOX	2							
3	1	198200-14210	RING, HALF	4							
4	1	198283-14311	SPINDLE, FRONT	2							
5	1	1A8310-14330	GEAR, FRONT FINAL 51	2							
6	1	198475-32660	SEAL, QLNY527514.5	2							
7	1	24101-062074	BEARING, BALL 6207	2							
8	1	24101-062094	BEARING, BALL 6209	2							
9	1	26106-100252	BOLT, M10X 25 PLATED	12							

N:Old $\xleftrightarrow[\text{No}]{\text{Yes}}$ New, Q:Old $\xleftrightarrow[\text{Yes}]{\text{No}}$ New, R:Old $\xleftrightarrow[\text{Yes}]{\text{Yes}}$ New, S:Old $\xleftrightarrow[\text{No}]{\text{No}}$ New, W:Add, Z:Discontinued, F:Interchangeable by set, K:Q'ty Change

Copyright (C) 2017 YANMAR GLOBAL CS CO., LTD. All RightsReserved.

Fig.27. SHAFT COVER

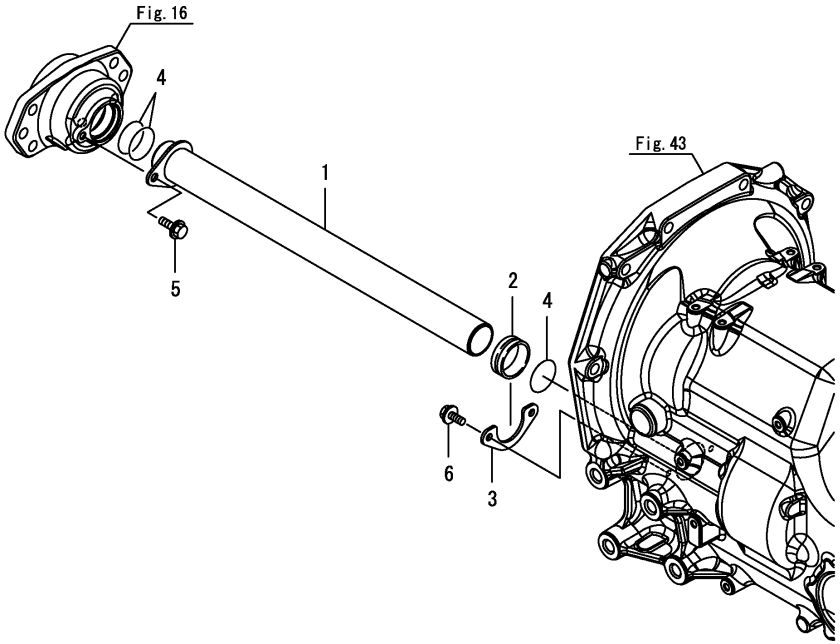

(A)=YT235Y, EU (D)=
(B)= (E)=
(C)= (F)=

No.	Lev.	Parts No.	Description	Q'ty (A)	(B)	(C)	(D)	(E)	(F)	I	R
1	1	1A8405-14630	COVER ASSY, SHAFT	1							
2	1	1A8310-14650	COLLAR	1							
3	1	1A8310-14660	PLATE	1							
4	1	24311-000400	O-RING, 1AP40.0	3							
5	1	26106-080162	BOLT, M8X 16 PLATED	1							
6	1	26106-080162	BOLT, M8X 16 PLATED	2							

N:Old $\xleftrightarrow[\text{No}]{\text{Yes}}$ New, Q:Old $\xleftrightarrow[\text{Yes}]{\text{No}}$ New, R:Old $\xleftrightarrow[\text{Yes}]{\text{Yes}}$ New, S:Old $\xleftrightarrow[\text{No}]{\text{No}}$ New, W:Add, Z:Discontinued, F:Interchangeable by set, K:Q'ty Change

Copyright (C) 2017 YANMAR GLOBAL CS CO., LTD. All RightsReserved.

Fig.28. FRONT WHEEL TIRE(6-14)

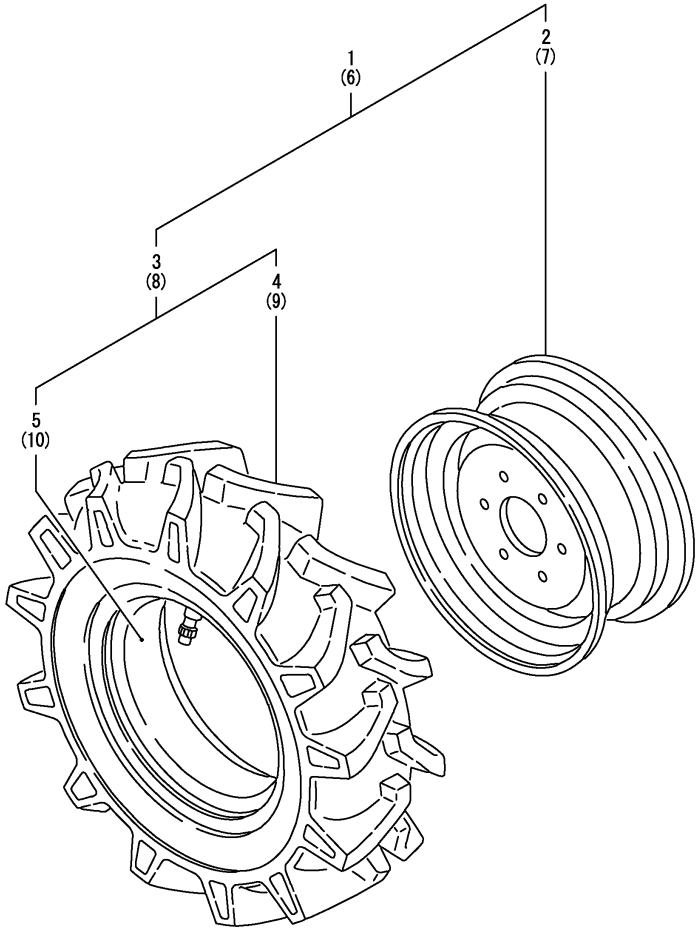

(A)=YT235Y, EU
(B)=
(C)=
(D)=
(E)=
(F)=

No.	Lev.	Parts No.	Description	Q'ty (A)	(B)	(C)	(D)	(E)	(F)	I	R
1	2	198031-14701-1	TIRE KIT, FRONT L	1							
2	3	1A8071-14710-1	WHEEL ASSY, 5JAX14	1							
3	3	194166-14800	TIRE ASSY, F 6X14	1							
4	4	194166-14810	TIRE, F 6-14 4 FSLM	1							
5	4	194166-14820	TUBE, 6-14	1							
6	2	198031-14801-1	TIRE ASSY, 6-14 R	1							
7	3	1A8071-14710-1	WHEEL ASSY, 5JAX14	1							
8	3	194166-14800	TIRE ASSY, F 6X14	1							
9	4	194166-14810	TIRE, F 6-14 4 FSLM	1							
10	4	194166-14820	TUBE, 6-14	1							

Remarks
* This figure is incorporated in the Fig.72 No.1.

N:Old $\frac{\text{Yes}}{\text{No}}$ New, Q:Old $\frac{\text{No}}{\text{Yes}}$ New, R:Old $\frac{\text{Yes}}{\text{Yes}}$ New, S:Old $\frac{\text{No}}{\text{No}}$ New, W:Add, Z:Discontinued, F:Interchangeable by set, K:Q'ty Change

Copyright (C) 2017 YANMAR GLOBAL CS CO., LTD. All RightsReserved.

Fig.29. FRONT WHEEL TIRE(24X8.5-12)

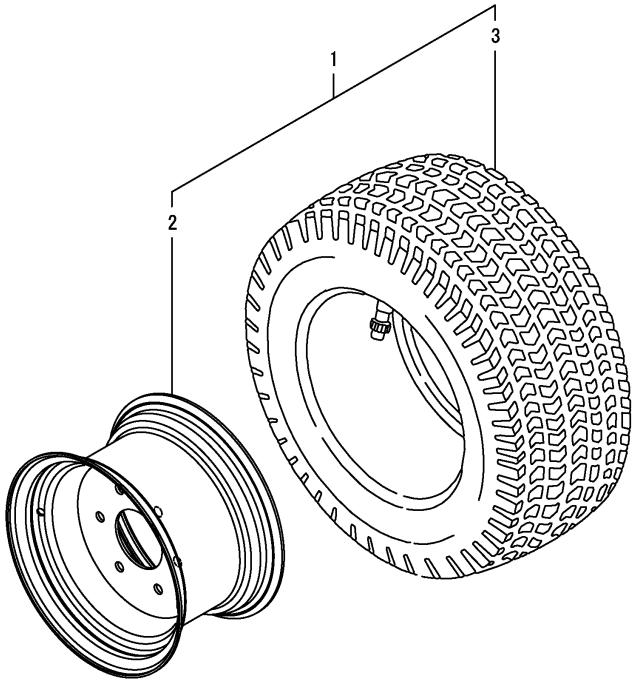

(A)=YT235Y, EU
(B)=
(C)=
(D)=
(E)=
(F)=

No.	Lev.	Parts No.	Description	Q'ty (A)	(B)	(C)	(D)	(E)	(F)	I	R
1	2	198280-14740-1	TIRE, F 24X8.50-12	2							
2	3	198200-14741-1	WHEEL, 12X7JA	2							
3	3	198280-14760	TIRE, 24X8.50-12-6	2							

Remarks
* This figure is incorporated in the Fig.74 No.1.

N:Old $\xleftrightarrow[\text{No}]{\text{Yes}}$ New, Q:Old $\xleftrightarrow[\text{Yes}]{\text{No}}$ New, R:Old $\xleftrightarrow[\text{Yes}]{\text{Yes}}$ New, S:Old $\xleftrightarrow[\text{No}]{\text{No}}$ New, W:Add, Z:Discontinued, F:Interchangeable by set, K:Q'ty Change

Copyright (C) 2017 YANMAR GLOBAL CS CO., LTD. All RightsReserved.

Fig.30. FRONT WHEEL TIRE(25X8.5-14)

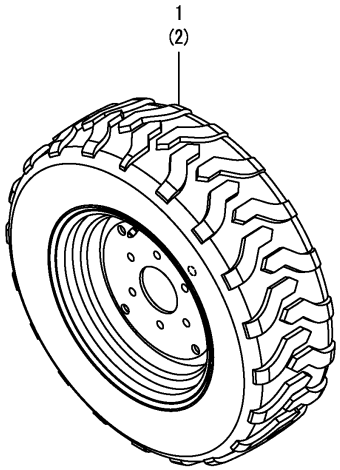

Remarks
* This figure is incorporated in the Fig.73 No.1.

(A)=YT235Y, EU
(B)=
(C)=
(D)=
(E)=
(F)=

No.	Lev.	Parts No.	Description	Q'ty (A)	(B)	(C)	(D)	(E)	(F)	I	R
1	2	1A8425-14700	TIRE KIT,FRONT R4 L	1							
2	2	1A8425-14800	TIRE KIT, FRONT R4 R	1							

N:Old $\frac{\text{Yes}}{\text{No}}$ New, Q:Old $\frac{\text{No}}{\text{Yes}}$ New, R:Old $\frac{\text{Yes}}{\text{Yes}}$ New, S:Old $\frac{\text{No}}{\text{No}}$ New, W:Add, Z:Discontinued, F:Interchangeable by set, K:Q'ty Change

Copyright (C) 2017 YANMAR GLOBAL CS CO., LTD. All RightsReserved.

Fig.31. FRONT WHEEL TIRE(200/70R16)

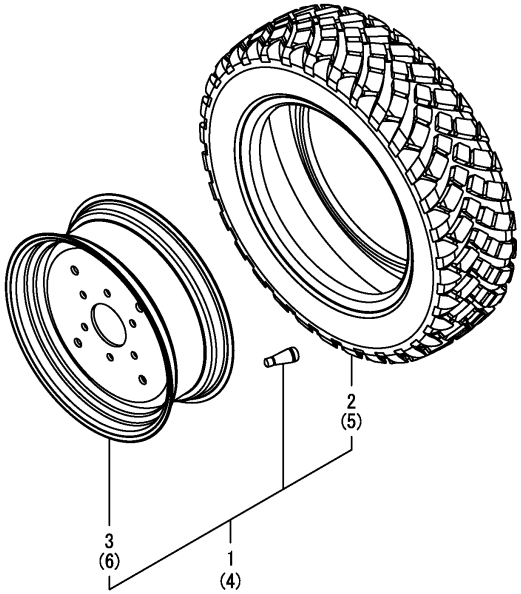

(A)=YT235Y, EU
(B)=
(C)=
(D)=
(E)=
(F)=

No.	Lev.	Parts No.	Description	Q'ty (A)	(B)	(C)	(D)	(E)	(F)	I	R
1	2	1A8426-14780	TIRE UNIT,L GARDEN	1							
2	3	1A8426-14790	TIRE, FRONT G-PRO	1							
3	3	1A8426-14810	WHEEL ASSY, F G-PRO	1							
4	2	1A8426-14880	TIRE UNIT,R GARDEN	1							
5	3	1A8426-14790	TIRE, FRONT G-PRO	1							
6	3	1A8426-14810	WHEEL ASSY, F G-PRO	1							

Remarks
* This figure is incorporated in the Fig.75 No.1.

N:Old $\overset{\text{Yes}}{\underset{\text{No}}{\leftrightarrows}}$ New, Q:Old $\overset{\text{No}}{\underset{\text{Yes}}{\leftrightarrows}}$ New, R:Old $\overset{\text{Yes}}{\underset{\text{Yes}}{\leftrightarrows}}$ New, S:Old $\overset{\text{No}}{\underset{\text{No}}{\leftrightarrows}}$ New, W:Add, Z:Discontinued, F:Interchangeable by set, K:Q'ty Change

Copyright (C) 2017 YANMAR GLOBAL CS CO., LTD. All RightsReserved.

Fig.32. HUB BOLT

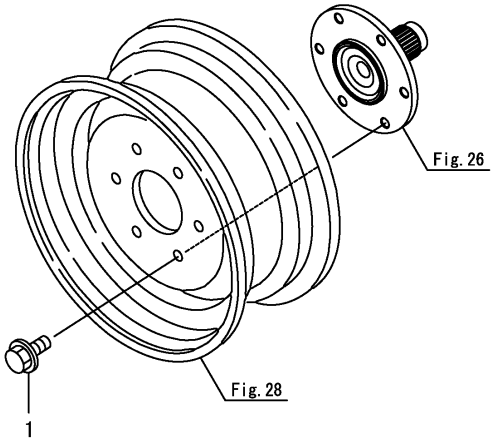

(A)=YT235Y, EU
(B)=
(C)=
(D)=
(E)=
(F)=

No.	Lev.	Parts No.	Description	Q'ty (A)	(B)	(C)	(D)	(E)	(F)	I	R
1	1	198133-34130	BOLT, M14X30	12							

N:Old $\xleftrightarrow[\text{No}]{\text{Yes}}$ New, Q:Old $\xleftrightarrow[\text{Yes}]{\text{No}}$ New, R:Old $\xleftrightarrow[\text{Yes}]{\text{Yes}}$ New, S:Old $\xleftrightarrow[\text{No}]{\text{No}}$ New, W:Add, Z:Discontinued, F:Interchangeable by set, K:Q'ty Change

Copyright (C) 2017 YANMAR GLOBAL CS CO., LTD. All RightsReserved.

Fig.33. FRONT GEAR BOX

(A)=YT235Y, EU
(B)=
(C)=
(D)=
(E)=
(F)=

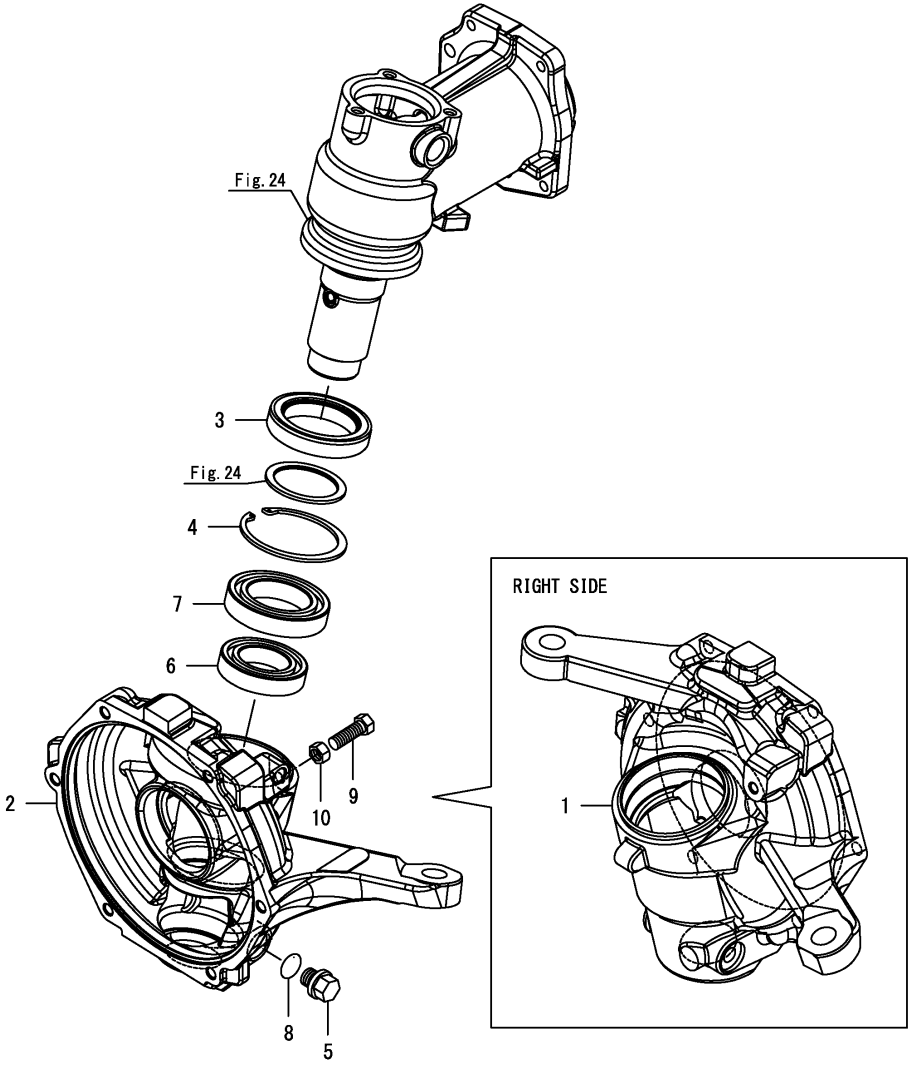

No.	Lev.	Parts No.	Description	Q'ty (A)	(B)	(C)	(D)	(E)	(F)	I	R
1	1	1A8430-14240	GEARBOX, FRONT R	1							
2	1	1A8406-14250	GEARBOX, FRONT L	1							
3	1	198483-32660	SEAL, OIL QLNY578015	2							
4	1	22252-000800	RING, 80	2							
5	1	23491-140002	PLUG, 14	2							
6	1	24101-060084	BEARING, BALL 6008	2							
7	1	24101-060104	BEARING, BALL 6010	2							
8	1	24311-000160	O-RING, 1AP16.0	2							
9	1	26116-100302	BOLT, M10X 30 PLATED	2							
10	1	26716-100002	NUT, M10	2							

N:Old $\overset{\text{Yes}}{\underset{\text{No}}{\leftrightarrows}}$ New, Q:Old $\overset{\text{No}}{\underset{\text{Yes}}{\leftrightarrows}}$ New, R:Old $\overset{\text{Yes}}{\underset{\text{Yes}}{\leftrightarrows}}$ New, S:Old $\overset{\text{No}}{\underset{\text{No}}{\leftrightarrows}}$ New, W:Add, Z:Discontinued, F:Interchangeable by set, K:Q'ty Change

Copyright (C) 2017 YANMAR GLOBAL CS CO., LTD. All RightsReserved.

Fig.34. STEERING COLUMN

(A)=YT235Y, EU
(B)=
(C)=
(D)=
(E)=
(F)=

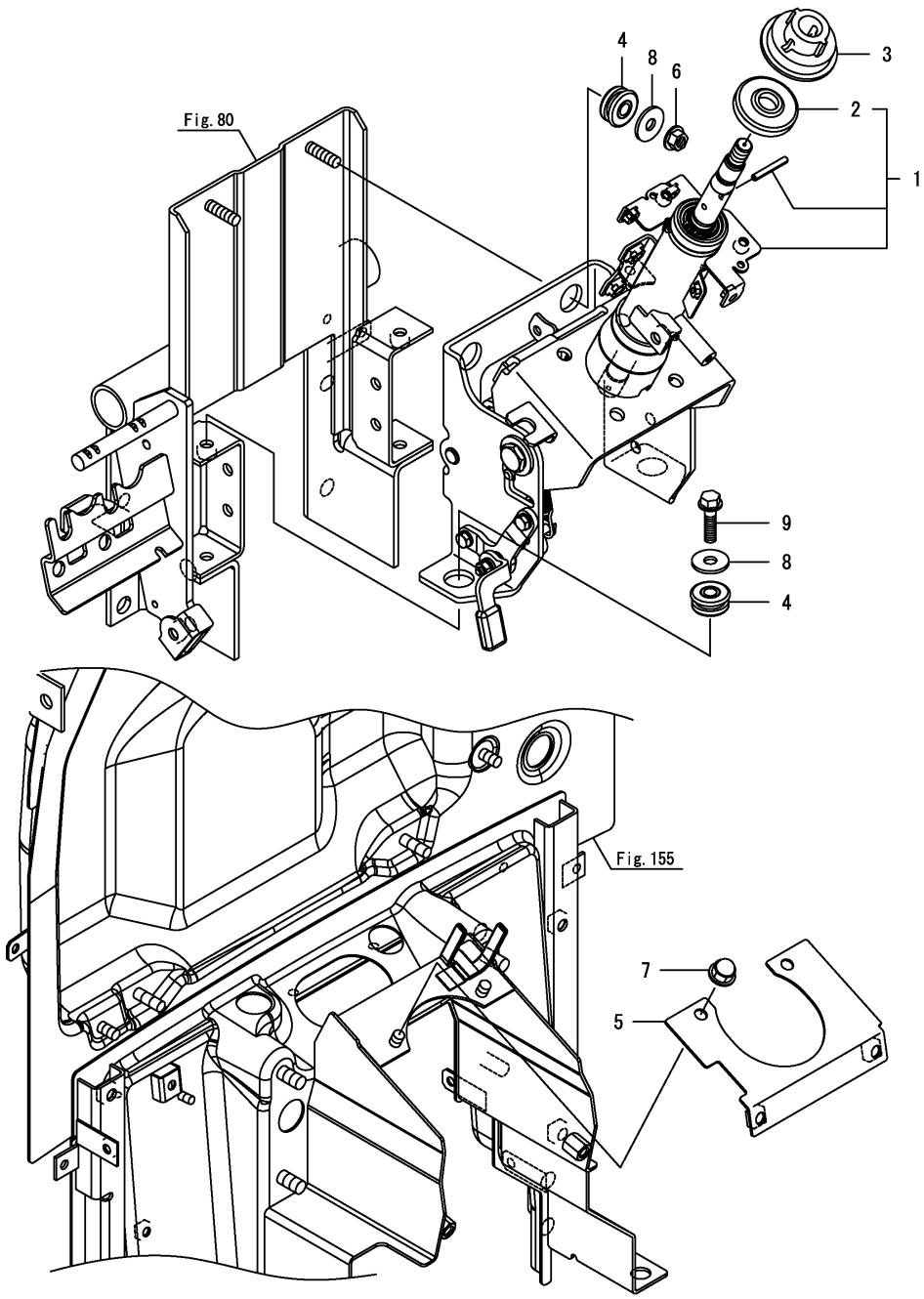

No.	Lev.	Parts No.	Description	Q'ty (A)	(B)	(C)	(D)	(E)	(F)	I	R
1	1	1A8405-15101	COLUMN ASSY, STR	1							
2	2	1A8470-15200	COVER, STEERING	1							
3	1	1A8060-15410	CAM, CANCEL	1							
4	1	1A8400-17660	MOUNT ASSY,ST-COLUMN	4							
5	1	1A8400-17760	COVER ASSY,PST VAL B	1							
6	1	194990-22140	NUT, M8	2							
7	1	1A8110-83730	NUT, CAP M8	2							
8	1	22157-080000	WASHER, 8	4							
9	1	26106-080302	BOLT, M8X 30 PLATED	2							

N:Old $\xleftrightarrow[\text{No}]{\text{Yes}}$ New, Q:Old $\xleftrightarrow[\text{Yes}]{\text{No}}$ New, R:Old $\xleftrightarrow[\text{Yes}]{\text{Yes}}$ New, S:Old $\xleftrightarrow[\text{No}]{\text{No}}$ New, W:Add, Z:Discontinued, F:Interchangeable by set, K:Q'ty Change

Copyright (C) 2017 YANMAR GLOBAL CS CO., LTD. All RightsReserved.

Fig.35. JOINT(STEERING)

(A)=YT235Y, EU
(B)=
(C)=
(D)=
(E)=
(F)=

No.	Lev.	Parts No.	Description	Q'ty (A)	(B)	(C)	(D)	(E)	(F)	I	R
1	1	1A8405-15300	JOINT ASSY,SHAFT	1							
2	1	26106-080302	BOLT, M8X 30 PLATED	2							
3	1	22217-080000	WASHER, SPRING 8	2							

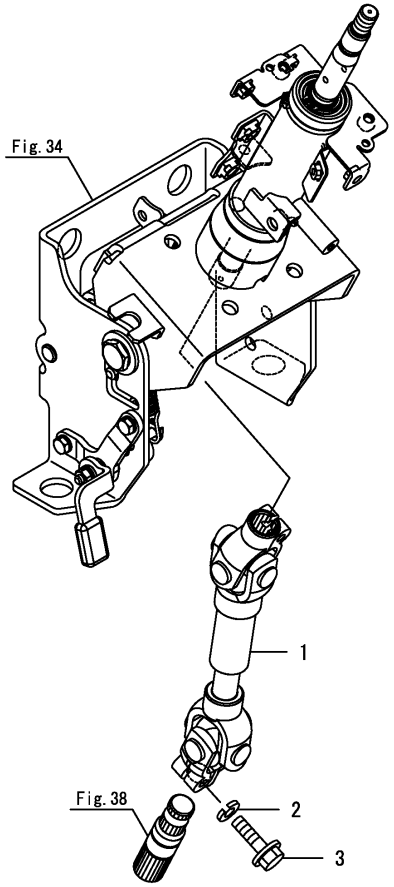

N:Old $\xleftarrow[\text{No}]{\text{Yes}}$ New, Q:Old $\xleftarrow[\text{Yes}]{\text{No}}$ New, R:Old $\xleftarrow[\text{Yes}]{\text{Yes}}$ New, S:Old $\xleftarrow[\text{No}]{\text{No}}$ New, W:Add, Z:Discontinued, F:Interchangeable by set, K:Q'ty Change

Copyright (C) 2017 YANMAR GLOBAL CS CO., LTD. All RightsReserved.

Fig.36. STEERING WHEEL

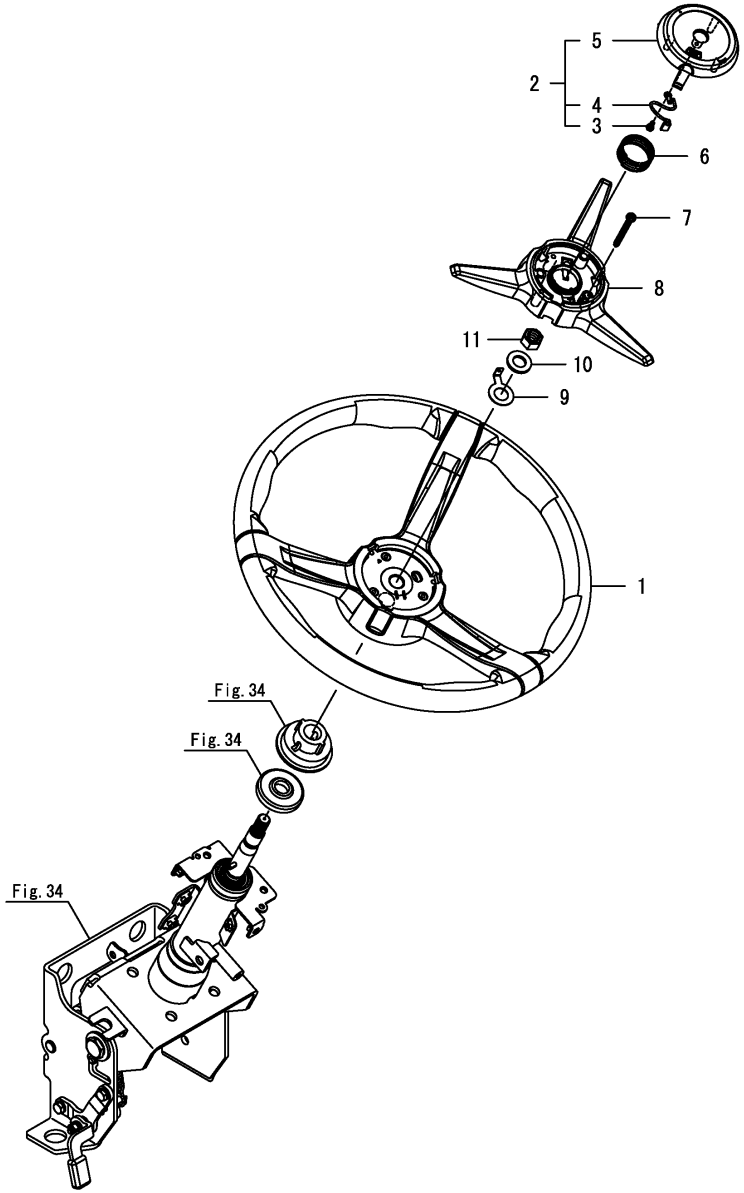

(A)=YT235Y, EU
(B)=
(C)=
(D)=
(E)=
(F)=

No.	Lev.	Parts No.	Description	Q'ty (A)	(B)	(C)	(D)	(E)	(F)	I	R
1	1	1A8400-15710	WHEEL,STEERING D360	1							
2	1	1A8060-15721	CAP ASSY,STR WHEEL	1							
3	2	1A8060-15791	CONTACT, HORN	1							
4	2	1A8060-15801	HARNESS, HORN	1							
5	2	1A8060-15840	CAP ASSY,HORN	1							
6	1	1A8060-15741	SPRING,STR WHEEL	1							
7	1	1A8060-15751	SCREW,STR WHEEL	3							
8	1	1A8060-15761	COVER ASSY,STR WHEEL	1							
9	1	1A8060-15780	TERMINAL,RING	1							
10	1	22137-120000	WASHER, 12	1							
11	1	26356-120002	NUT, M12	1							

N:Old $\xleftarrow[\text{No}]{\text{Yes}}$ New, Q:Old $\xleftarrow[\text{Yes}]{\text{No}}$ New, R:Old $\xleftarrow[\text{Yes}]{\text{Yes}}$ New, S:Old $\xleftarrow[\text{No}]{\text{No}}$ New, W:Add, Z:Discontinued, F:Interchangeable by set, K:Q'ty Change

Copyright (C) 2017 YANMAR GLOBAL CS CO., LTD. All RightsReserved.

Fig.37. P.S.T. CYLINDER

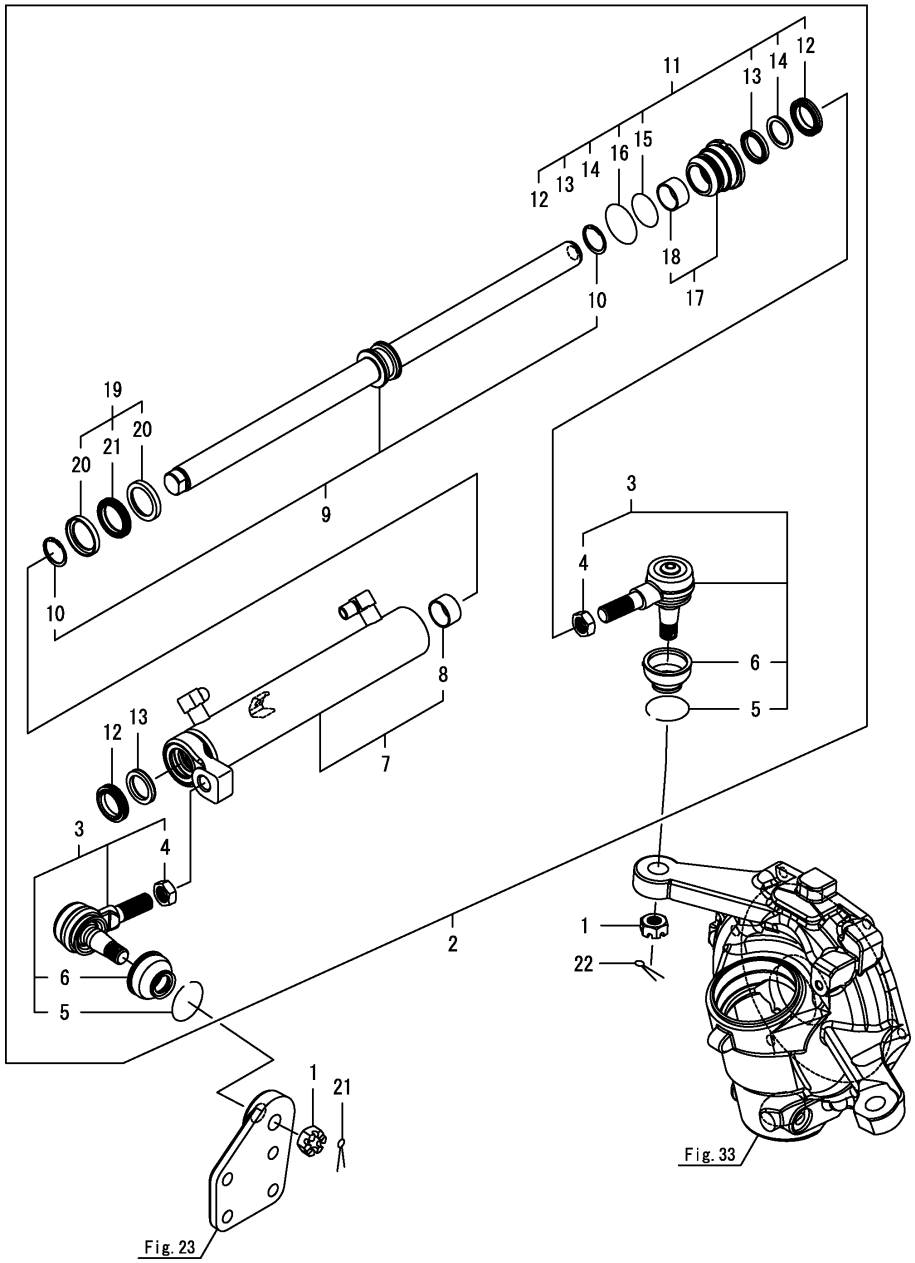

(A)=YT235Y, EU
(B)=
(C)=
(D)=
(E)=
(F)=

No.	Lev.	Parts No.	Description	Q'ty (A)	(B)	(C)	(D)	(E)	(F)	I	R
1	1	194180-12471	NUT, CASTLE M16	2							
2	1	1A8405-17301	CYLINDER ASSY, PST	1							
3	2	1A8310-12651	END ASSY, RH-B	2							
4	3	1A8310-12540	NUT, 16 R	2							
5	3	1A8310-12610	BAND, BOOTS	2							
6	3	1A8310-12640	COVER, DUST	2							
7	2	1A8400-17021	TUBE ASSY, CYLINDER	1							
8	3	24550-025150	BUSH, 25X15	1							
9	2	1A8400-17050	ROD ASSY, STEERING	1							
10	3	22292-000250	RING, S-25	2							
11	2	1A8410-17100	SEAL KIT, A	1							
12	3	1A8400-17140	SCRAPER, 25	2							
13	3	1A8410-17160	PACKING, 25	2							
14	3	1A8410-17170	RING, BACK UP G33	2							
15	3	24315-000350	O-RING, 1BP35.0	1							
16	3	24341-000420	O-RING, 1AS42.0	1							
17	2	1A8410-17110	CAP ASSY	1							
18	3	24550-025150	BUSH, 25X15	1							
19	2	1A8400-17200	SEAL KIT, B	1							
20	3	172156-72340	BEARING, PWL 40	2							
21	3	1A8400-72810	SEAL, PACKING 40	1							
22	1	22417-400400	PIN, COTTER 4.0X40	2							

N:Old $\frac{\text{Yes}}{\text{No}}$ New, Q:Old $\frac{\text{No}}{\text{Yes}}$ New, R:Old $\frac{\text{Yes}}{\text{Yes}}$ New, S:Old $\frac{\text{No}}{\text{No}}$ New, W:Add, Z:Discontinued, F:Interchangeable by set, K:Q'ty Change

Copyright (C) 2017 YANMAR GLOBAL CS CO., LTD. All RightsReserved.

Fig.38. P.S.T. VALVE

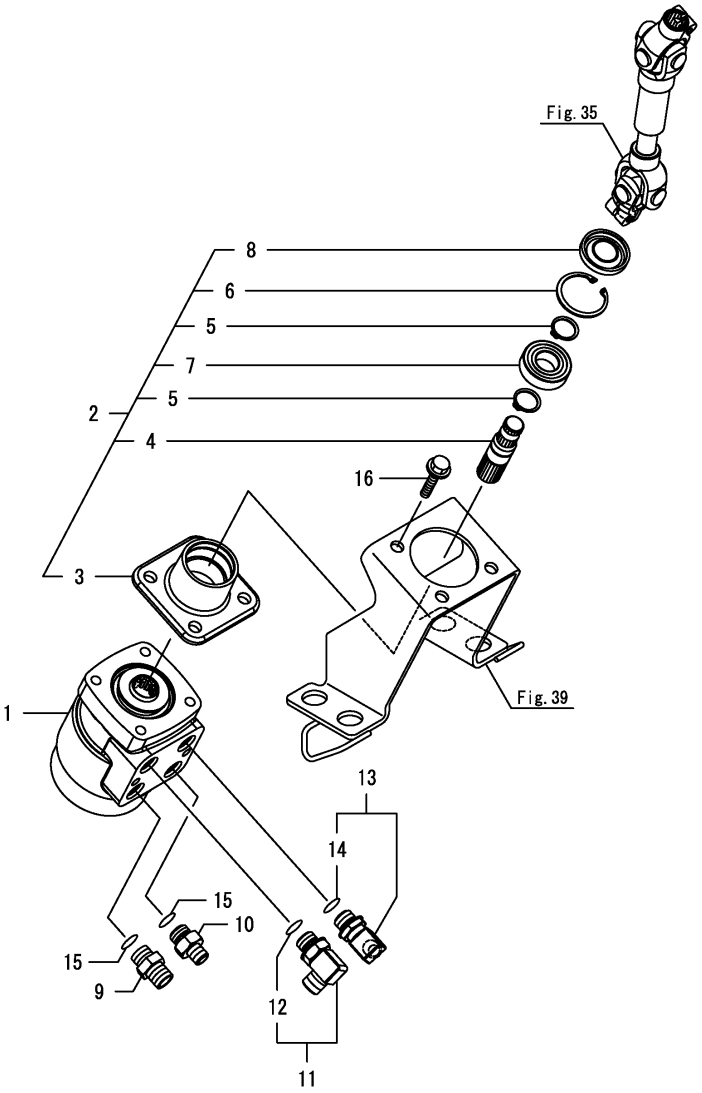

(A)=YT235Y, EU
(B)=
(C)=
(D)=
(E)=
(F)=

No.	Lev.	Parts No.	Description	Q'ty (A)	(B)	(C)	(D)	(E)	(F)	I	R
1	1	1A8400-17500-1	VALVE ASSY, STEERING	1							
2	1	1A8060-17601	SHAFT UNIT, PST	1							
3	2	1A8060-17610	BRACKET, PST VALVE	1							
4	2	1A8060-17631	SHAFT, PST VALVE	1							
5	2	22242-000200	RING, 20	2							
6	2	22252-000420	RING, 42	1							
7	2	24104-060040	BEARING, 6004UUC3	1							
8	2	24430-204206	SEAL, OIL VC204206	1							
9	1	172730-75141	ADAPTER, M/M C	1							
10	1	172124-76160	CONNECTOR	1							
11	1	172142-76181	JOINT, 90-3/8	1							
12	2	24315-000140	O-RING, 1BP14.0	1							
13	1	172141-76920	CONNECTOR ASSY	1							
14	2	24315-000140	O-RING, 1BP14.0	1							
15	1	24315-000140	O-RING, 1BP14.0	2							
16	1	26106-100252	BOLT, M10X 25 PLATED	3							

N:Old $\frac{\text{Yes}}{\text{No}}$ New, Q:Old $\frac{\text{No}}{\text{Yes}}$ New, R:Old $\frac{\text{Yes}}{\text{Yes}}$ New, S:Old $\frac{\text{No}}{\text{No}}$ New, W:Add, Z:Discontinued, F:Interchangeable by set, K:Q'ty Change

Copyright (C) 2017 YANMAR GLOBAL CS CO., LTD. All RightsReserved.

Fig.39. BRACKET(P.S.T. VALVE)

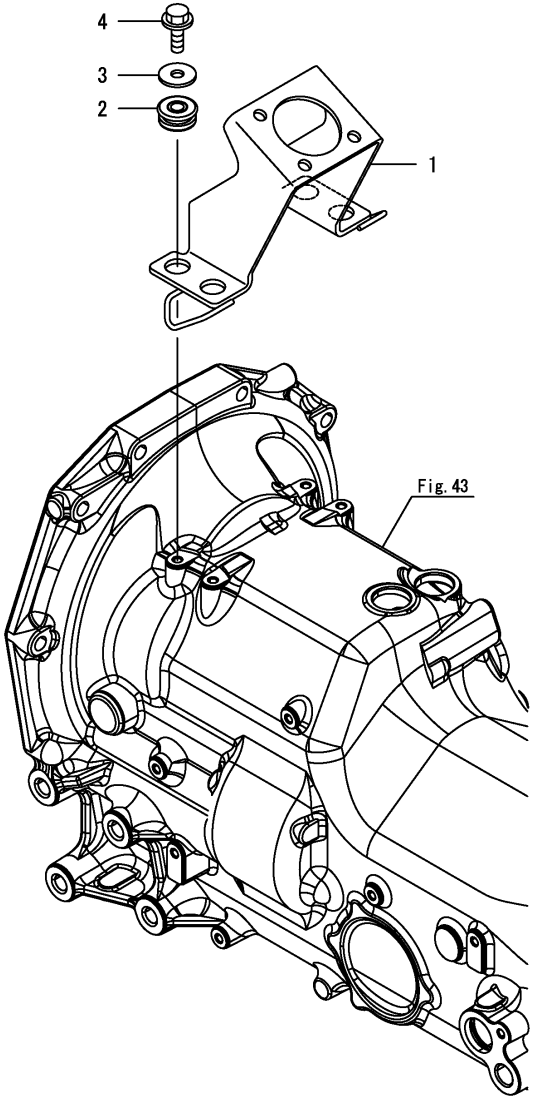

(A)=YT235Y, EU (D)=
(B)= (E)=
(C)= (F)=

No.	Lev.	Parts No.	Description	Q'ty (A)	(B)	(C)	(D)	(E)	(F)	I	R
1	1	1A8400-17612	BRACKET ASSY,PST VA.	1							
2	1	1A8400-17660	MOUNT ASSY,ST-COLUMN	4							
3	1	22157-080000	WASHER, 8	4							
4	1	26106-080252	BOLT, M8X 25 PLATED	4							

N:Old $\xleftrightarrow[\text{No}]{\text{Yes}}$ New, Q:Old $\xleftrightarrow[\text{Yes}]{\text{No}}$ New, R:Old $\xleftrightarrow[\text{Yes}]{\text{Yes}}$ New, S:Old $\xleftrightarrow[\text{No}]{\text{No}}$ New, W:Add, Z:Discontinued, F:Interchangeable by set, K:Q'ty Change

Copyright (C) 2017 YANMAR GLOBAL CS CO., LTD. All RightsReserved.

Fig.40. COVER(P.S.T. VALVE)

(A)=YT235Y, EU
(B)=
(C)=
(D)=
(E)=
(F)=

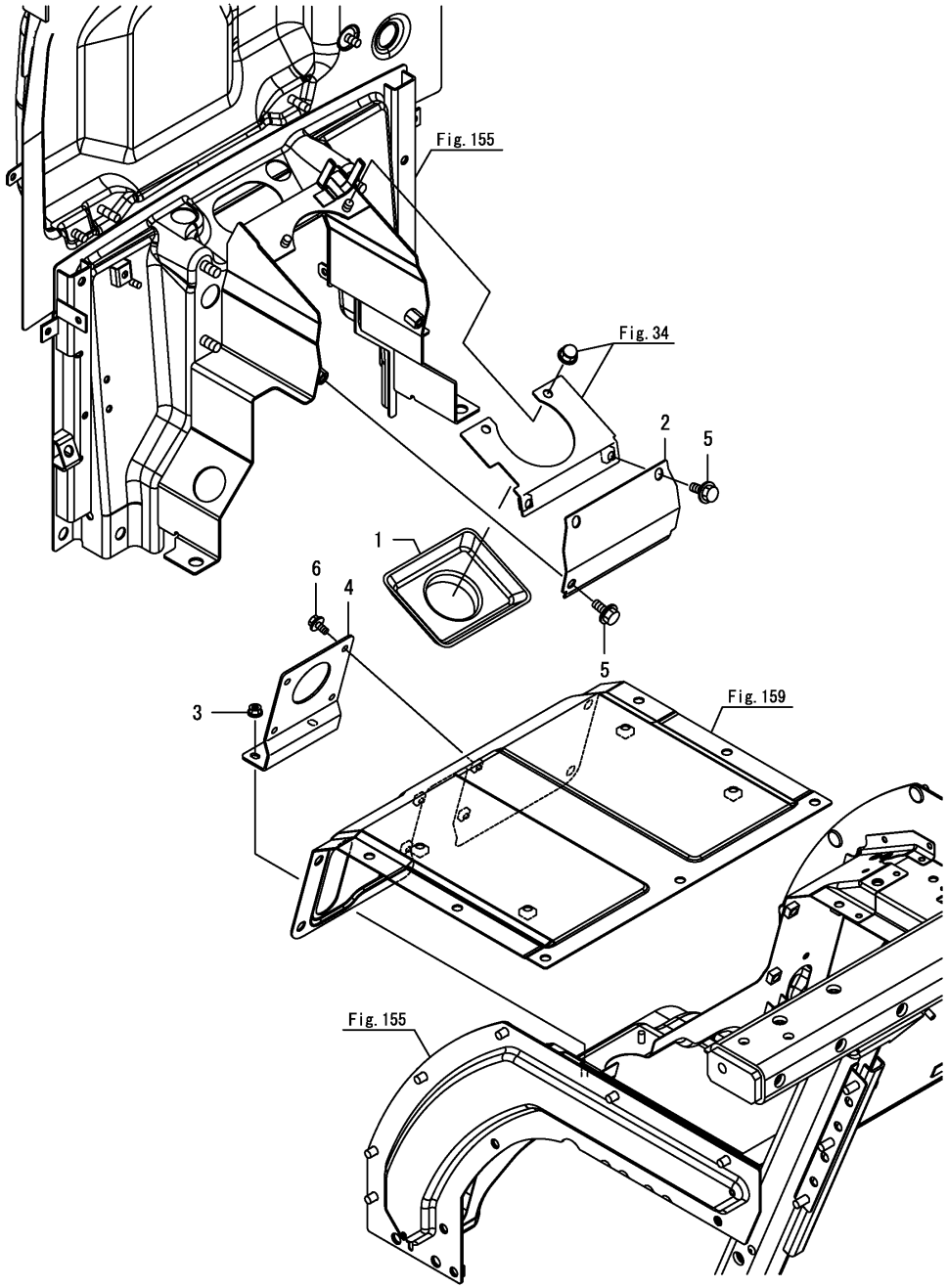

No.	Lev.	Parts No.	Description	Q'ty (A)	(B)	(C)	(D)	(E)	(F)	I	R
1	1	1A8400-17711	SEAL, PST VALVE	1							
2	1	1A8400-17721	COVER,PST VALVE A	1							
3	1	194990-22130	NUT, M6	2							
4	1	1A8400-62950	COVER, SEAT B	1							
5	1	198460-83350	BOLT, M8X16	3							
6	1	26106-060122	BOLT, M6X 12 PLATED	4							

N:Old $\xleftrightarrow[\text{No}]{\text{Yes}}$ New, Q:Old $\xleftrightarrow[\text{Yes}]{\text{No}}$ New, R:Old $\xleftrightarrow[\text{Yes}]{\text{Yes}}$ New, S:Old $\xleftrightarrow[\text{No}]{\text{No}}$ New, W:Add, Z:Discontinued, F:Interchangeable by set, K:Q'ty Change

Copyright (C) 2017 YANMAR GLOBAL CS CO., LTD. All RightsReserved.

Fig.41. COVER(P.S.T. VALVE)(CABIN)

(A)=YT235Y, EU
(B)=
(C)=
(D)=
(E)=
(F)=

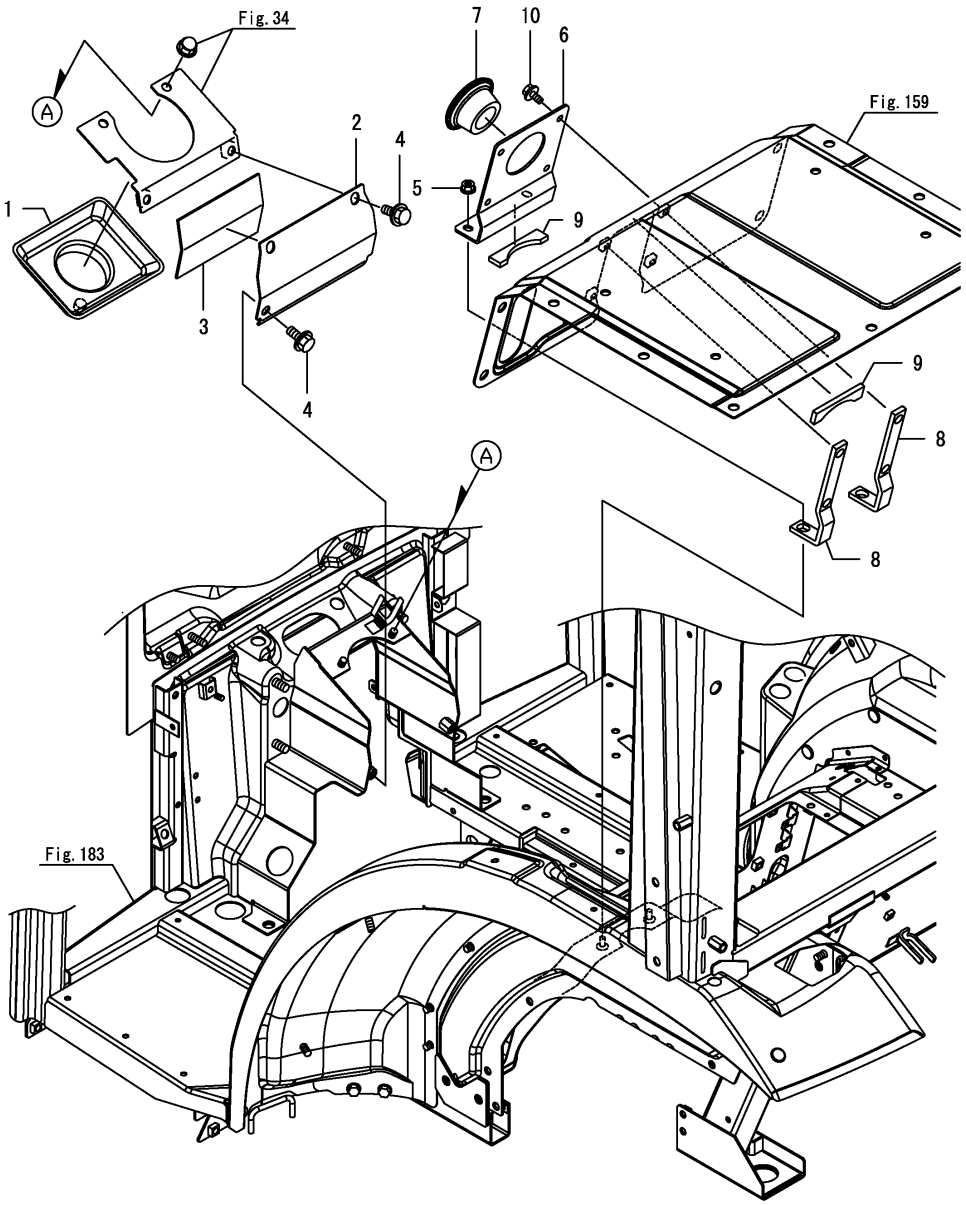

No.	Lev.	Parts No.	Description	Q'ty (A)	(B)	(C)	(D)	(E)	(F)	I	R
1	1	1A8400-17711	SEAL, PST VALVE	1							
2	1	1A8400-17721	COVER,PST VALVE A	1							
3	1	1A8400-17741	RUBBER, PST COVER	1							
4	1	198460-83350	BOLT, M8X16	3							
5	1	194990-22130	NUT, M6	2							
6	1	1A8400-62950	COVER, SEAT B	1							
7	1	1A8420-63111	BOOT, STOP LEVER	1							
8	1	1A8420-84420	SEAL, SEAT COVER BA	2							
9	1	1A8420-84430	SEAL, SEAT COVER BB	2							
10	1	26106-060122	BOLT, M6X 12 PLATED	4							

N:Old $\overset{\text{Yes}}{\underset{\text{No}}{\leftrightarrows}}$ New, Q:Old $\overset{\text{No}}{\underset{\text{Yes}}{\leftrightarrows}}$ New, R:Old $\overset{\text{Yes}}{\underset{\text{Yes}}{\leftrightarrows}}$ New, S:Old $\overset{\text{No}}{\underset{\text{No}}{\leftrightarrows}}$ New, W:Add, Z:Discontinued, F:Interchangeable by set, K:Q'ty Change

Copyright (C) 2017 YANMAR GLOBAL CS CO., LTD. All RightsReserved.

Fig.42. P.S.T. HOSE

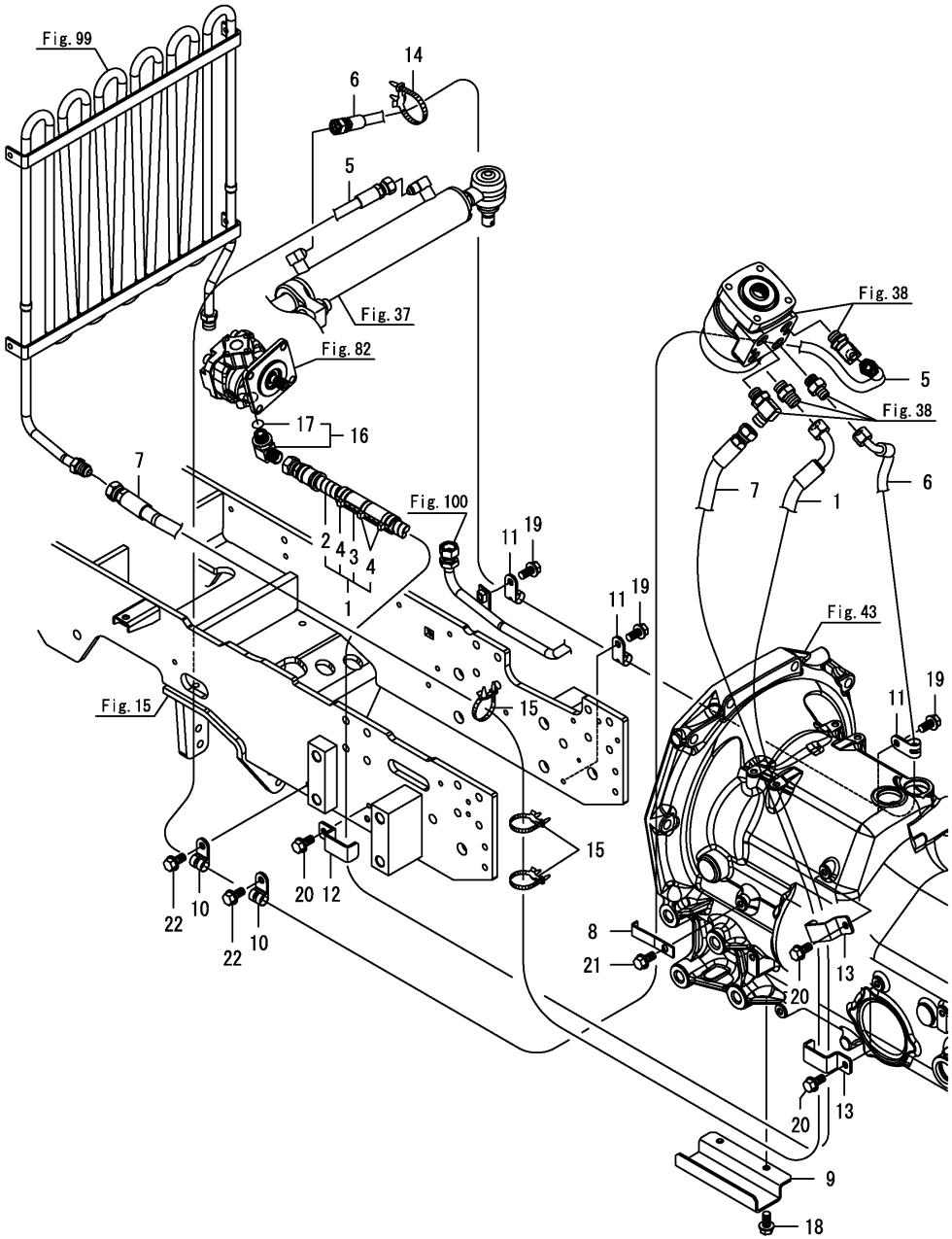

(A)=YT235Y, EU (D)=
(B)= (E)=
(C)= (F)=

No.	Lev.	Parts No.	Description	Q'ty (A)	(B)	(C)	(D)	(E)	(F)	I	R
1	1	1A8400-17801	HOSE ASSY, PUMP	1							
1-1	1	1A8405-17800	HOSE ASSY, PUMP	1						N	
	(A=F200008)										
2	2	1A8400-17832	HOSE, PUMP	1							
3	2	1A8400-17870	RUBBER, GUARD	1							
4	2	29621-200001	BAND, TR200	3							
5	1	1A8405-17812	HOSE, CYLINDER L	1							
6	1	1A8405-17822	HOSE, CYLINDER R	1							
7	1	1A8401-17842	HOSE, TANK	1							
8	1	1A8400-17861	CLAMP	1							
9	1	1A8400-17900	BRACKET, HOSE	1							
10	1	1A8310-17910	CLAMP, RUBBER	2							
11	1	1A8310-17910	CLAMP, RUBBER	3							
12	1	1A8400-17950	CLAMP, HOSE	1							
13	1	1A8400-17950	CLAMP, HOSE	2							
14	1	194680-51670	BAND, CLIP	1							
15	1	1A8275-51670	CLIP, M8 HOLE	3							
16	1	172142-76181	JOINT, 90-3/8	1							
17	2	24315-000140	O-RING, 1BP14.0	1							
18	1	26106-080162	BOLT, M8X 16 PLATED	2							
19	1	26106-080162	BOLT, M8X 16 PLATED	3							
20	1	26106-080162	BOLT, M8X 16 PLATED	3							
21	1	26106-080162	BOLT, M8X 16 PLATED	1							
22	1	26106-080162	BOLT, M8X 16 PLATED	2							

N:Old $\frac{\text{Yes}}{\text{No}}$ New, Q:Old $\frac{\text{No}}{\text{Yes}}$ New, R:Old $\frac{\text{Yes}}{\text{Yes}}$ New, S:Old $\frac{\text{No}}{\text{No}}$ New, W:Add, Z:Discontinued, F:Interchangeable by set, K:Q'ty Change

Copyright (C) 2017 YANMAR GLOBAL CS CO., LTD. All RightsReserved.

Fig.43. CLUTCH HOUSING

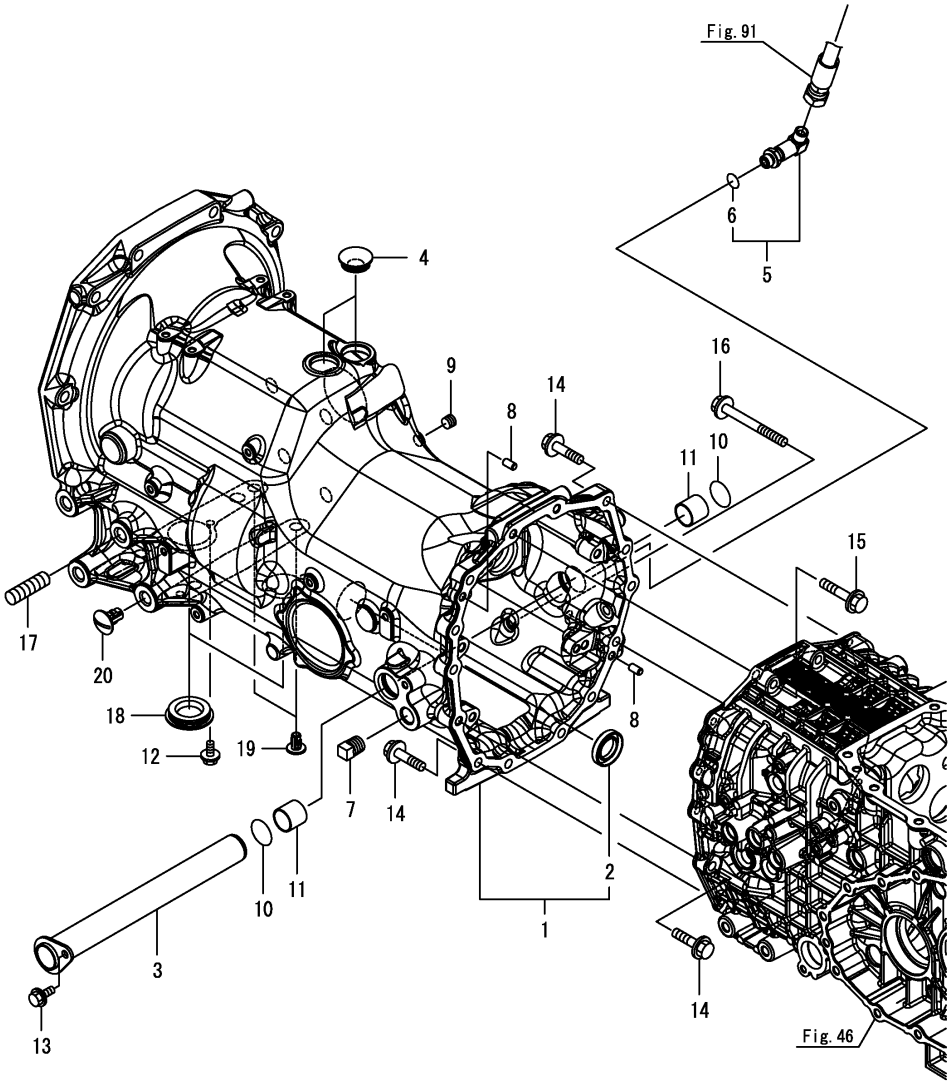

(A)=YT235Y, EU
(B)=
(C)=
(D)=
(E)=
(F)=

No.	Lev.	Parts No.	Description	Q'ty (A)	(B)	(C)	(D)	(E)	(F)	I	R
1	1	1A8416-21100	HOUSING ASSY, CLUTCH	1							
2	2	24423-254208	SEAL, OIL TC254208	1							
3	1	1A8415-21310	PIPE ASSY,MOWER LINK	1							
4	1	1A6660-24250	PLUG, BORE 32	2							
5	1	1D4220-22870	ELBOW ASSY, 3/8-3/8	1							
6	2	24315-000140	O-RING, 1BP14.0	1							
7	1	194322-24980	PLUG, 1-2NPT	1							
8	1	22312-080140	PIN, PARALLEL M8X14	2							
9	1	23871-020000	PLUG, R02	1							
10	1	24311-000320	O-RING, 1AP32.0	2							
11	1	24550-025250	BUSH, 25X25	2							
12	1	26106-080162	BOLT, M8X 16 PLATED	2							
13	1	26106-080162	BOLT, M8X 16 PLATED	1							
14	1	26106-100402	BOLT, M10X 40 PLATED	11							
15	1	26106-100502	BOLT, M10X 50 PLATED	2							
16	1	26106-100952	BOLT, M10X 95 PLATED	1							
17	1	26216-160352	STUD, M16X 35	1							
18	1	27260-470002	PLUG, 47	2							
19	1	41810-000120	CAP, BOLT M12	4							
20	1	41810-000160	CAP, BOLT M16	2							

N:Old $\xleftarrow[\text{No}]{\text{Yes}}$ New, Q:Old $\xleftarrow[\text{Yes}]{\text{No}}$ New, R:Old $\xleftarrow[\text{Yes}]{\text{Yes}}$ New, S:Old $\xleftarrow[\text{No}]{\text{No}}$ New, W:Add, Z:Discontinued, F:Interchangeable by set, K:Q'ty Change

Copyright (C) 2017 YANMAR GLOBAL CS CO., LTD. All RightsReserved.

Fig.44. DOCKING BOLT

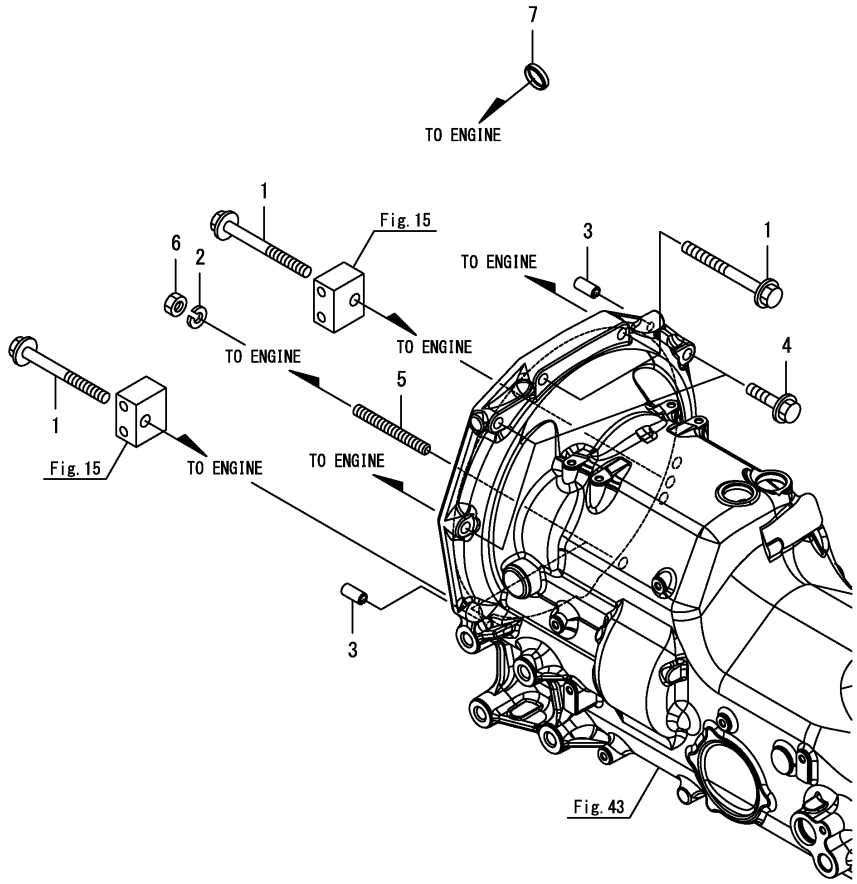

(A)=YT235Y, EU
(B)=
(C)=
(D)=
(E)=
(F)=

No.	Lev.	Parts No.	Description	Q'ty (A)	(B)	(C)	(D)	(E)	(F)	I	R
1	1	1A8420-21250	BOLT, 12X120	4							
2	1	22217-120000	WASHER, SPRING 12	2							
3	1	22351-080018	PIN, SPRING 8.0X18	2							
4	1	26106-120502	BOLT, M12X 50 PLATED	3							
5	1	26216-120902	STUD, M12X 90	2							
6	1	26716-120002	NUT, M12	2							
7	1	27260-300000	PLUG, 30	1							

N:Old $\xleftrightarrow[\text{No}]{\text{Yes}}$ New, Q:Old $\xleftrightarrow[\text{Yes}]{\text{No}}$ New, R:Old $\xleftrightarrow[\text{Yes}]{\text{Yes}}$ New, S:Old $\xleftrightarrow[\text{No}]{\text{No}}$ New, W:Add, Z:Discontinued, F:Interchangeable by set, K:Q'ty Change

Copyright (C) 2017 YANMAR GLOBAL CS CO., LTD. All RightsReserved.

Fig.45. COUPLING(FLYWHEEL)

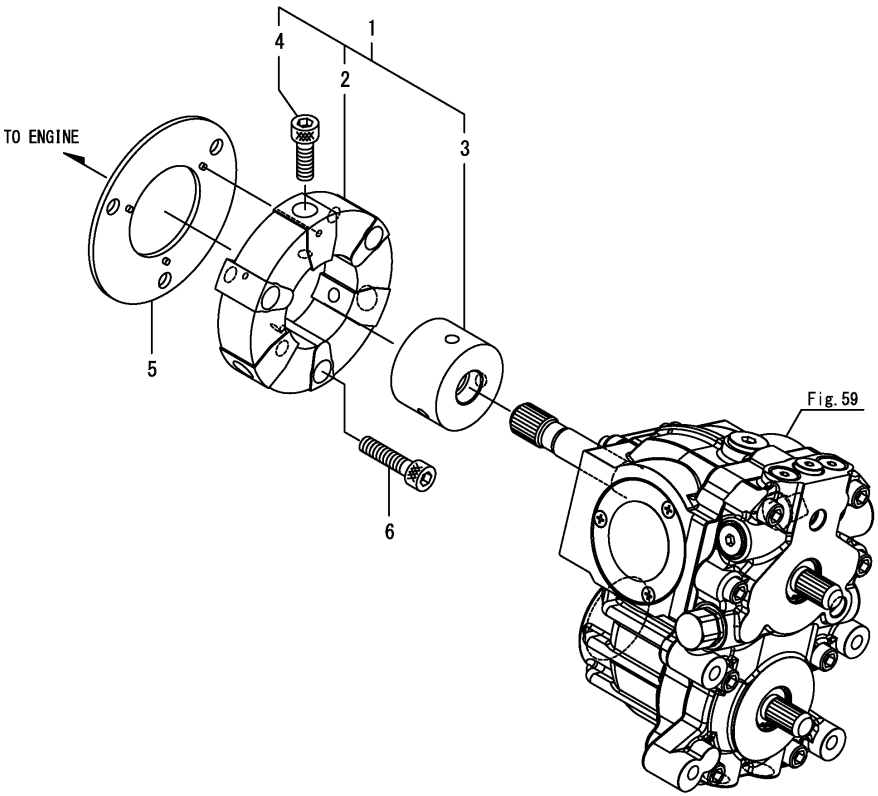

(A)=YT235Y, EU
(B)=
(C)=
(D)=
(E)=
(F)=

No.	Lev.	Parts No.	Description	Q'ty (A)	(B)	(C)	(D)	(E)	(F)	I	R
1	1	1A8415-22160	COUPLING, FLYWHEEL	1							
2	2	1A8415-22180	OUTER	1							
3	2	1A8415-22190	HUB	1							
4	2	26450-120352	BOLT, M12X 35	3							
5	1	1A8415-22170	PLATE, FLYWHEEL	1							
6	1	26450-120452	BOLT, M12X 45	3							

N:Old $\xleftrightarrow[\text{No}]{\text{Yes}}$ New, Q:Old $\xleftrightarrow[\text{Yes}]{\text{No}}$ New, R:Old $\xleftrightarrow[\text{Yes}]{\text{Yes}}$ New, S:Old $\xleftrightarrow[\text{No}]{\text{No}}$ New, W:Add, Z:Discontinued, F:Interchangeable by set, K:Q'ty Change

Copyright (C) 2017 YANMAR GLOBAL CS CO., LTD. All RightsReserved.

Fig.46. TRANSMISSION CASE

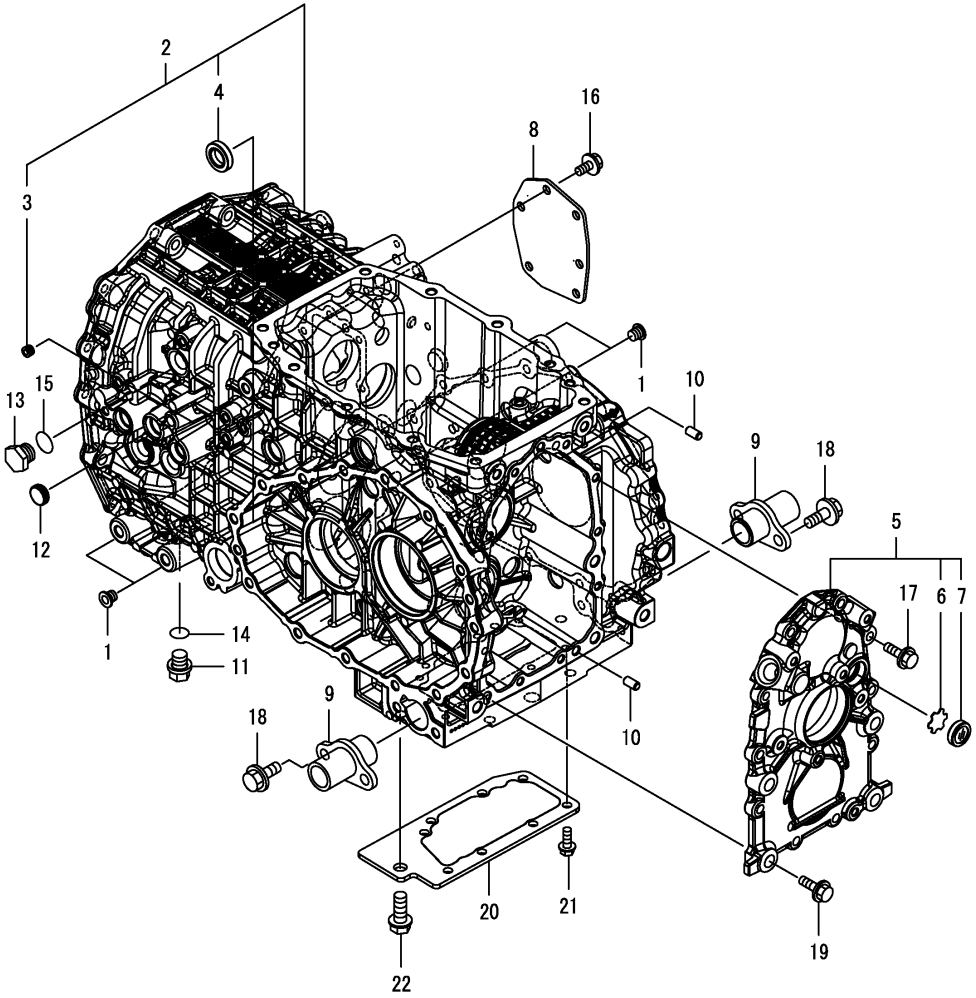

(A)=YT235Y, EU (D)=
(B)= (E)=
(C)= (F)=

No.	Lev.	Parts No.	Description	Q'ty (A)	(B)	(C)	(D)	(E)	(F)	I	R
1	1	194150-21910	PLUG, SCREW 11.2	4							
2	1	1A8416-24100	HOUSING ASSY, T/M	1							
3	2	23871-010000	PLUG, R01	1							
4	2	24421-173007	SEAL, OIL TC173007	1							
5	1	1A8415-24150	COVER ASSY, REAR	1							
6	2	198071-24350	PLATE, WINDOW	1							
7	2	1A1040-28470	WINDOW, OIL CHECK 25	1							
8	1	1A8100-24180	COVER, MISSION SIDE	1							
9	1	198200-73170-1	SUPPORT, LOWER LINK	2							
10	1	22312-080140	PIN, PARALLEL M8X14	2							
11	1	23491-140002	PLUG, 14	1							
12	1	27260-220000	PLUG, 22	1							
13	1	23887-180002	PLUG, 18	1							
14	1	24311-000160	O-RING, 1AP16.0	1							
15	1	24311-000180	O-RING, 1AP18.0	1							
16	1	26106-080162	BOLT, M8X 16 PLATED	6							
17	1	26106-080252	BOLT, M8X 25 PLATED	10							
18	1	26106-100252	BOLT, M10X 25 PLATED	4							
19	1	26106-120452	BOLT, M12X 45 PLATED	4							
20	1	1A8416-24190	COVER, MISSION CASE	1							
21	1	26106-080202	BOLT, M8X 20 PLATED	8							
22	1	26106-120302	BOLT, M12X 30 PLATED	1							

N:Old $\xleftarrow[\text{No}]{\text{Yes}}$ New, Q:Old $\xleftarrow[\text{Yes}]{\text{No}}$ New, R:Old $\xleftarrow[\text{Yes}]{\text{Yes}}$ New, S:Old $\xleftarrow[\text{No}]{\text{No}}$ New, W:Add, Z:Discontinued, F:Interchangeable by set, K:Q'ty Change

Copyright (C) 2017 YANMAR GLOBAL CS CO., LTD. All RightsReserved.

Fig.47. CENTER CASE

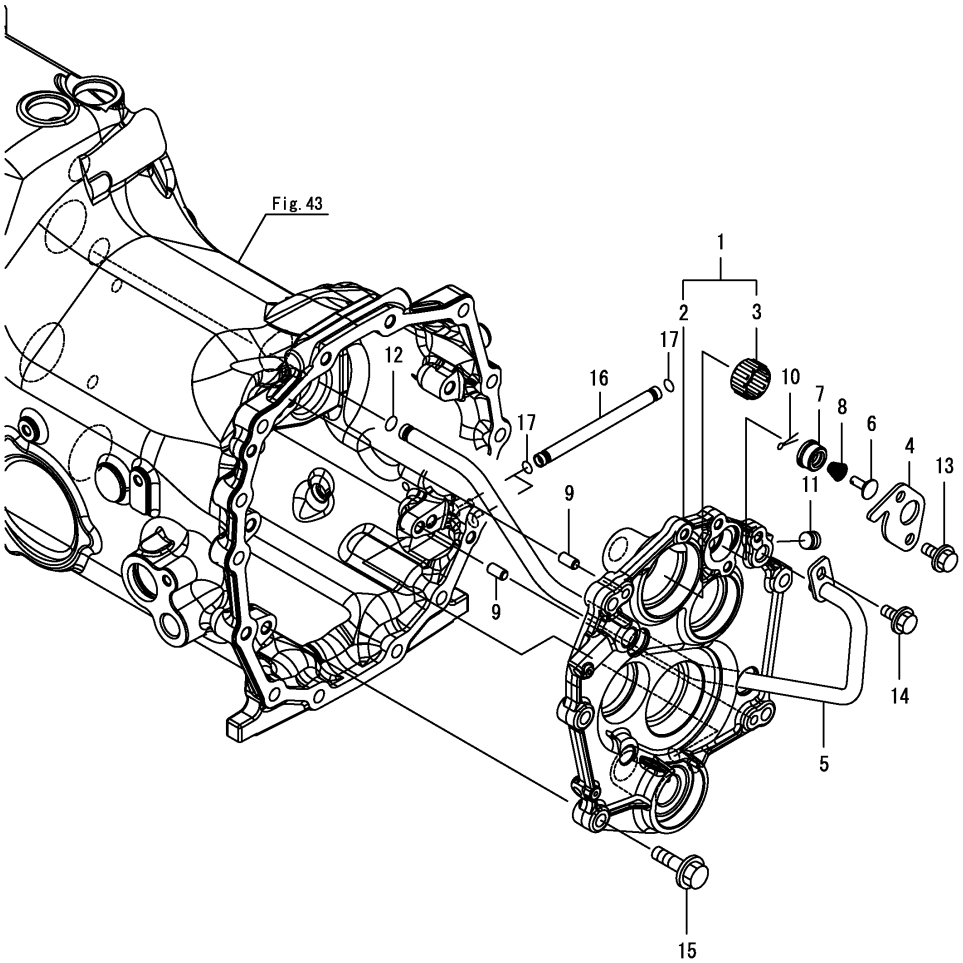

(A)=YT235Y, EU (D)=
(B)= (E)=
(C)= (F)=

No.	Lev.	Parts No.	Description	Q'ty (A)	(B)	(C)	(D)	(E)	(F)	I	R
1	1	1A8410-24320	RETAINER ASSY, BEAR.	1							
2	2	1A8410-24330	RETAINER, BEARING	1							
3	2	24162-222915	NEEDLE, 222915	1							
4	1	1A8415-24370	PLATE, RETAINER	1							
5	1	1A8410-25050	PIPE ASSY, TANK	1							
6	1	1E6190-55660	VALVE, 2ND RELIEF	1							
7	1	1E6190-55710	SHEET, 2ND RELIEF	1							
8	1	1E6480-56410	SPRING, 2ND RELIEF	1							
9	1	22312-080140	PIN, PARALLEL M8X14	2							
10	1	22417-200100	COTTER PIN 2.0X10	1							
11	1	23871-020000	PLUG, R02	1							
12	1	24341-000100	O-RING, 1AS10.0	1							
13	1	26106-080162	BOLT, M8X 16 PLATED	2							
14	1	26106-080162	BOLT, M8X 16 PLATED	1							
15	1	26106-100352	BOLT, M10X 35 PLATED	4							
16	1	1A8400-24360	PIPE, FWD	2							
17	1	24341-000080	O-RING, 1AS8.0	4							

N:Old $\xleftrightarrow[\text{No}]{\text{Yes}}$ New, Q:Old $\xleftrightarrow[\text{Yes}]{\text{No}}$ New, R:Old $\xleftrightarrow[\text{Yes}]{\text{Yes}}$ New, S:Old $\xleftrightarrow[\text{No}]{\text{No}}$ New, W:Add, Z:Discontinued, F:Interchangeable by set, K:Q'ty Change

Copyright (C) 2017 YANMAR GLOBAL CS CO., LTD. All RightsReserved.

Fig.48. REDUCTION SHAFT

(A)=YT235Y, EU
(B)=
(C)=
(D)=
(E)=
(F)=

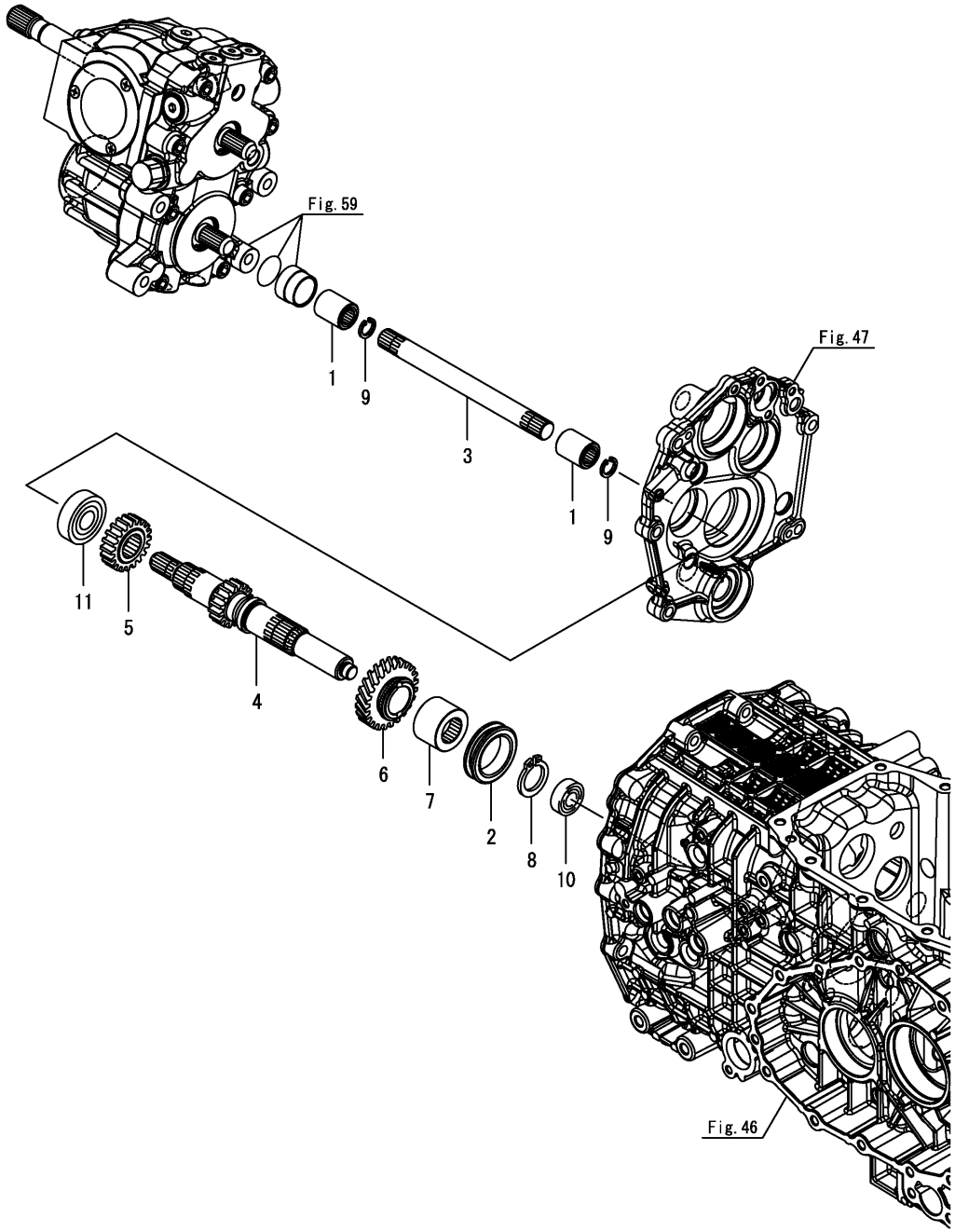

No.	Lev.	Parts No.	Description	Q'ty (A)	(B)	(C)	(D)	(E)	(F)	I	R
1	1	194310-25100	JOINT, INNER	2							
2	1	1A8400-25150	SHIFTER	1							
3	1	1A8410-25410	SHAFT, CONECT.	1							
4	1	1A8415-25510	SHAFT, REDUCTION	1							
5	1	1A8415-25660	GEAR, REDUCTION	1							
6	1	1A8416-25650	GEAR, REDUCTION	1							
7	1	1A8410-25790	COLLAR, SPLINE	1							
8	1	22242-000290	RING, 29	1							
9	1	22252-000170	RING, 17	2							
10	1	24101-062024	BEARING, BALL 6202	1							
11	1	24101-063044	BEARING, BALL 6304	1							

N:Old $\xleftarrow[\text{No}]{\text{Yes}}$ New, Q:Old $\xleftarrow[\text{Yes}]{\text{No}}$ New, R:Old $\xleftarrow[\text{Yes}]{\text{Yes}}$ New, S:Old $\xleftarrow[\text{No}]{\text{No}}$ New, W:Add, Z:Discontinued, F:Interchangeable by set, K:Q'ty Change

Copyright (C) 2017 YANMAR GLOBAL CS CO., LTD. All RightsReserved.

Fig.49. COUNTER SHAFT

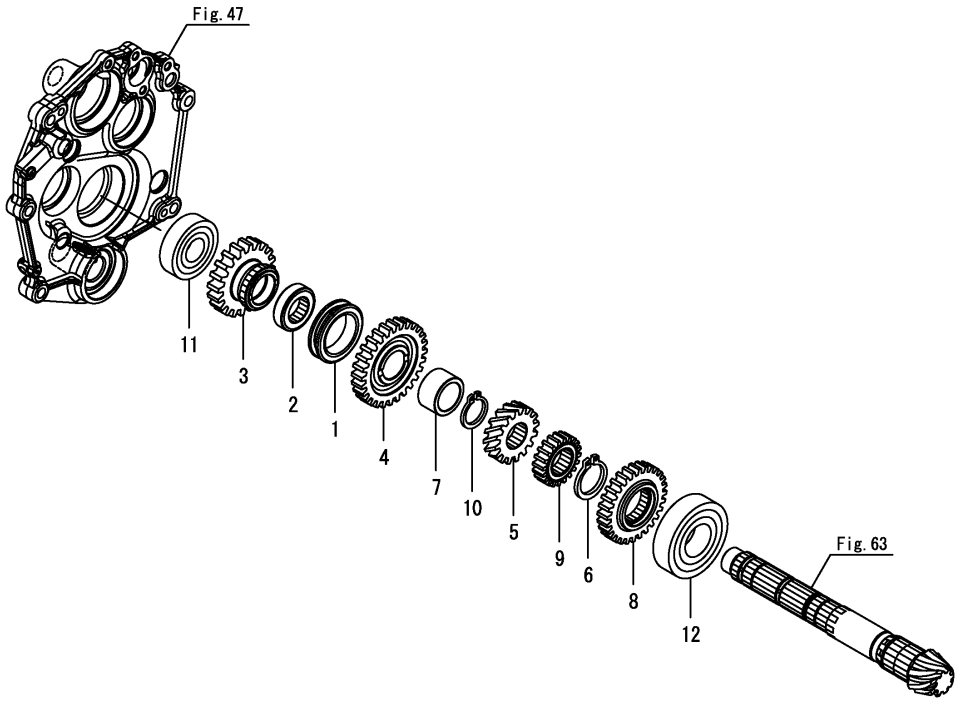

(A)=YT235Y, EU
(B)=
(C)=
(D)=
(E)=
(F)=

No.	Lev.	Parts No.	Description	Q'ty (A)	(B)	(C)	(D)	(E)	(F)	I	R
1	1	1A8400-25150	SHIFTER	1							
2	1	1A8400-25480	COLLAR, SPLINE	1							
3	1	1A8415-25530	GEAR, COUNTER	1							
4	1	1A8415-25540	GEAR, COUNTER	1							
5	1	1A8416-25520	GEAR, COUNTER	1							
6	1	1A8310-25810	CIRCLIP, C35X2	1							
7	1	1A8415-25820	COLLAR, 30X40X21.8	1							
8	1	1A8416-28260	GEAR, FRONT 24	1							
9	1	1A8400-28250	GEAR, FRONT 20	1							
10	1	22242-000290	RING, 29	1							
11	1	24101-063054	BEARING, BALL 6305	1							
12	1	24101-063074	BEARING, BALL 6307	1							

N:Old $\xleftarrow[\text{No}]{\text{Yes}}$ New, Q:Old $\xleftarrow[\text{Yes}]{\text{No}}$ New, R:Old $\xleftarrow[\text{Yes}]{\text{Yes}}$ New, S:Old $\xleftarrow[\text{No}]{\text{No}}$ New, W:Add, Z:Discontinued, F:Interchangeable by set, K:Q'ty Change

Copyright (C) 2017 YANMAR GLOBAL CS CO., LTD. All RightsReserved.

Fig.50. P.T.O. CLUTCH

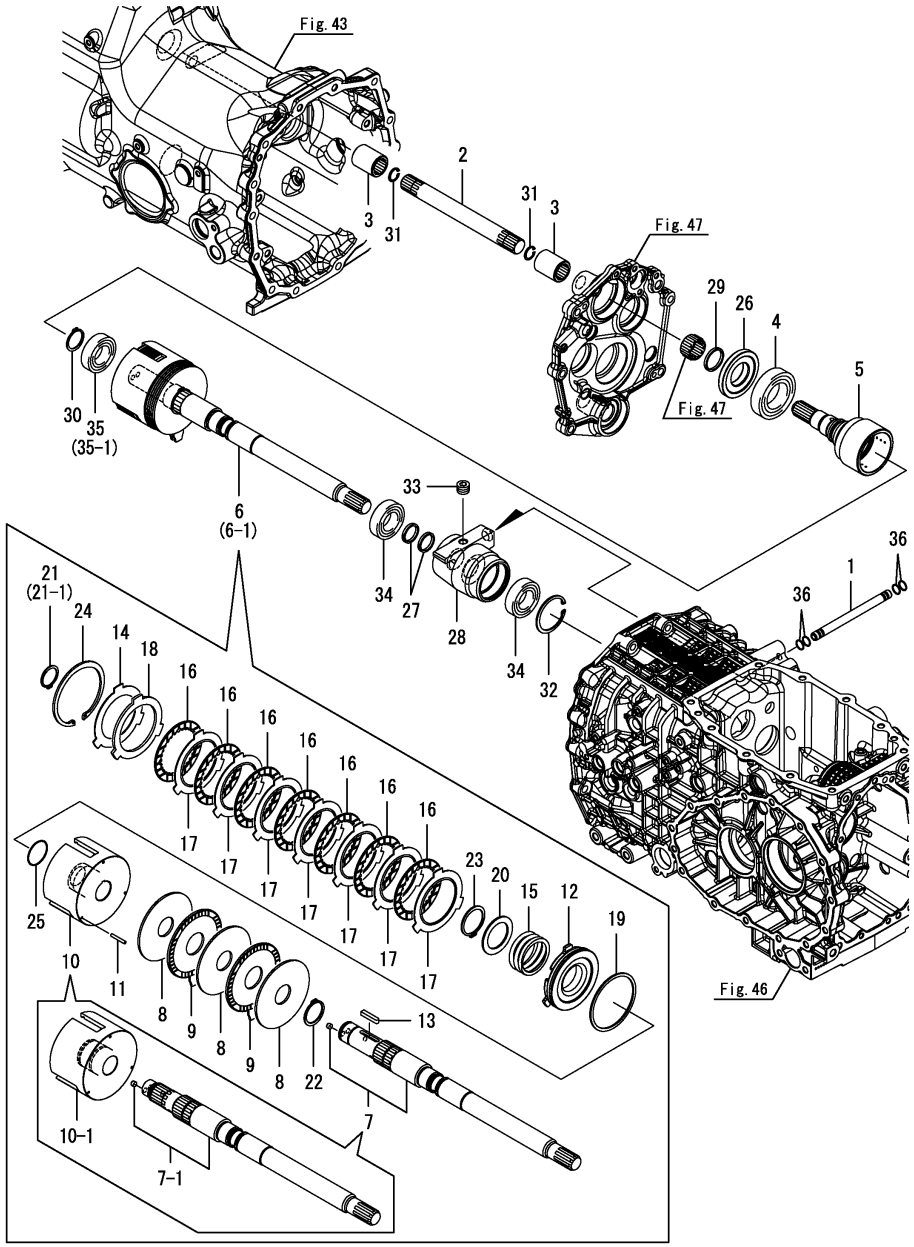

(A)=YT235Y, EU (D)=
(B)= (E)=
(C)= (F)=

No.	Lev.	Parts No.	Description	Q'ty (A)	(B)	(C)	(D)	(E)	(F)	I	R
1	1	1A8415-26670	PIPE, PTO	1							
2	1	1A8410-25090	SHAFT, CONECT.	1							
3	1	194310-25100	JOINT, INNER	2							
4	1	194454-25770	BEARING, BALL 16007	1							
5	1	1A8415-26020	HUB, SPLINE	1							
6	1	1A8415-26030	CLUTCH KIT, PTO	1							
6-1	1	1A8415-26010	CLUTCH KIT, PTO	1						F	1
	(A=F200008)										
7	2	1A8415-26050	SHAFT KIT, CLUTCH	1							
7-1	2	1A8415-26150	SHAFT KIT, CLUTCH	1						S	
	(A=F200008)										
8	2	1A8415-26070	PLATE, BRAKE	3							
9	2	1A8415-26080	DISK, BRAKE	2							
10	2	1A8415-26090	CASE, CLUTCH	1							
10-1	2	1A8415-26190	CASE, CLUTCH	1						S	
	(A=F200008)										
11	2	1A8415-26110	PIN, BRAKE	3							
12	2	1A8415-26120	PISTON, CLUTCH	1							
13	2	1A8415-26130	KEY	1						Z	
	(A=F200008)										
14	2	1A8415-26140	PLATE, STEEL 1.2	1							
15	2	1A8330-26240	SPRING, CLUTCH	1							
16	2	1A7540-26620	PLATE, FRICTION 80	7							
17	2	1A7540-26630	PLATE, STEEL 1.2	7							
18	2	1A7540-26640	PLATE, STEEL 3.18	1							
19	2	1A7540-26670	D-RING,69.5X4.5XT1.8	1							
20	2	1A8275-26790	COLLAR	1							
21	2	22242-000250	RING, 25	1							
21-1	2	22242-000240	RING, 24	1						S	
	(A=F200008)										
22	2	22242-000290	RING, 29	1							
23	2	22242-100350	RING, 35	1							
24	2	22252-000820	RING, 82	1							
25	2	24341-000320	O-RING, 1AS32.0	1							
26	1	1A8415-26040	COLLAR, PTO CLUTCH	1							
27	1	198167-26240	RING, SEAL 21X25X3	2							
28	1	1A8415-26680	CASE, SEAL	1							
29	1	198451-28750	RING, 26.27X30.07X3	1							
30	1	22242-000250	RING, 25	1						Z	1
	(A=F200008)										
31	1	22252-000170	RING, 17	2							
32	1	22252-000470	RING, 47	1							
33	1	23871-010000	PLUG, R01	1							
34	1	24101-060054	BEARING, BALL 6005	2							
35	1	24101-060054	BEARING, BALL 6005	1							
35-1	1	24101-062044	BEARING, BALL 6204	1						F	1
	(A=F200008)										
36	1	24341-000080	O-RING, 1AS8.0	4							

Remarks
(1)No.6-1, 30 & 35-1 are interchangeable by set.

N:Old $\xleftarrow[\text{No}]{\text{Yes}}$ New, Q:Old $\xleftarrow[\text{Yes}]{\text{No}}$ New, R:Old $\xleftarrow[\text{Yes}]{\text{Yes}}$ New, S:Old $\xleftarrow[\text{No}]{\text{No}}$ New, W:Add, Z:Discontinued, F:Interchangeable by set, K:Q'ty Change

Copyright (C) 2017 YANMAR GLOBAL CS CO., LTD. All RightsReserved.

Fig.51. P.T.O. DRIVE SHAFT

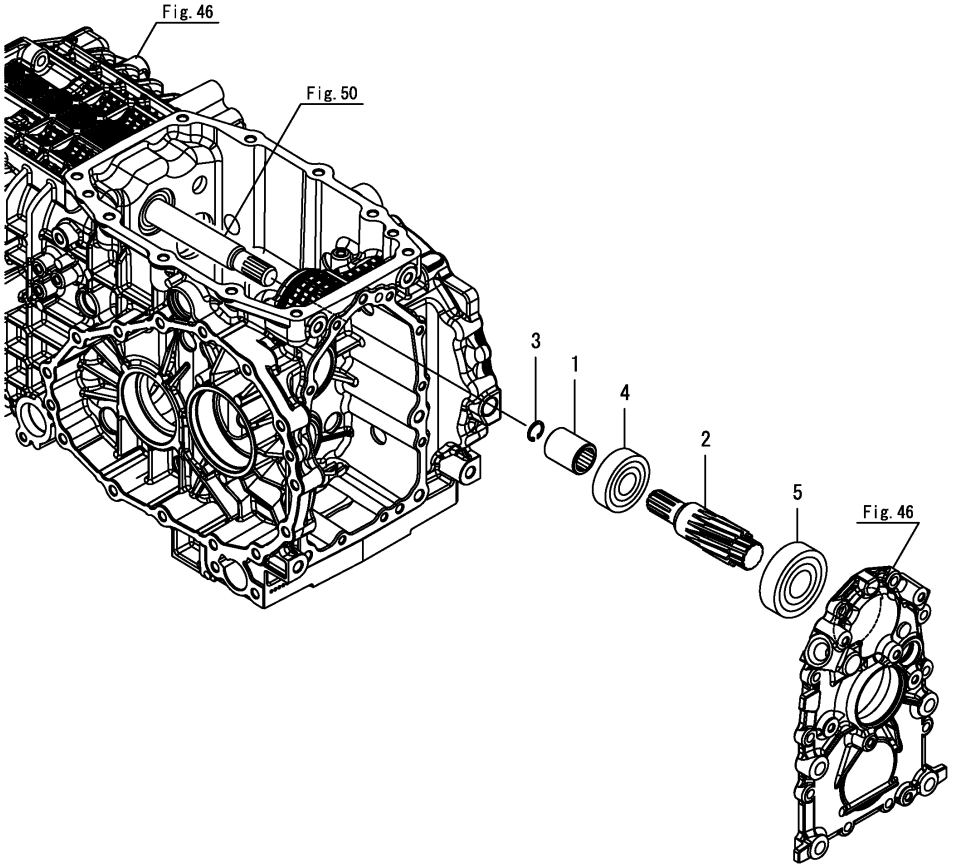

(A)=YT235Y, EU
(B)=
(C)=
(D)=
(E)=
(F)=

No.	Lev.	Parts No.	Description	Q'ty (A)	(B)	(C)	(D)	(E)	(F)	I	R
1	1	194310-25100	JOINT, INNER	1							
2	1	1A8415-26270	GEAR, PTO PINION	1							
3	1	22252-000170	RING, 17	1							
4	1	24101-063044	BEARING, BALL 6304	1							
5	1	24101-063054	BEARING, BALL 6305	1							

N:Old $\xleftarrow[\text{No}]{\text{Yes}}$ New, Q:Old $\xleftarrow[\text{Yes}]{\text{No}}$ New, R:Old $\xleftarrow[\text{Yes}]{\text{Yes}}$ New, S:Old $\xleftarrow[\text{No}]{\text{No}}$ New, W:Add, Z:Discontinued, F:Interchangeable by set, K:Q'ty Change

Copyright (C) 2017 YANMAR GLOBAL CS CO., LTD. All RightsReserved.

Fig.52. P.T.O. SHAFT

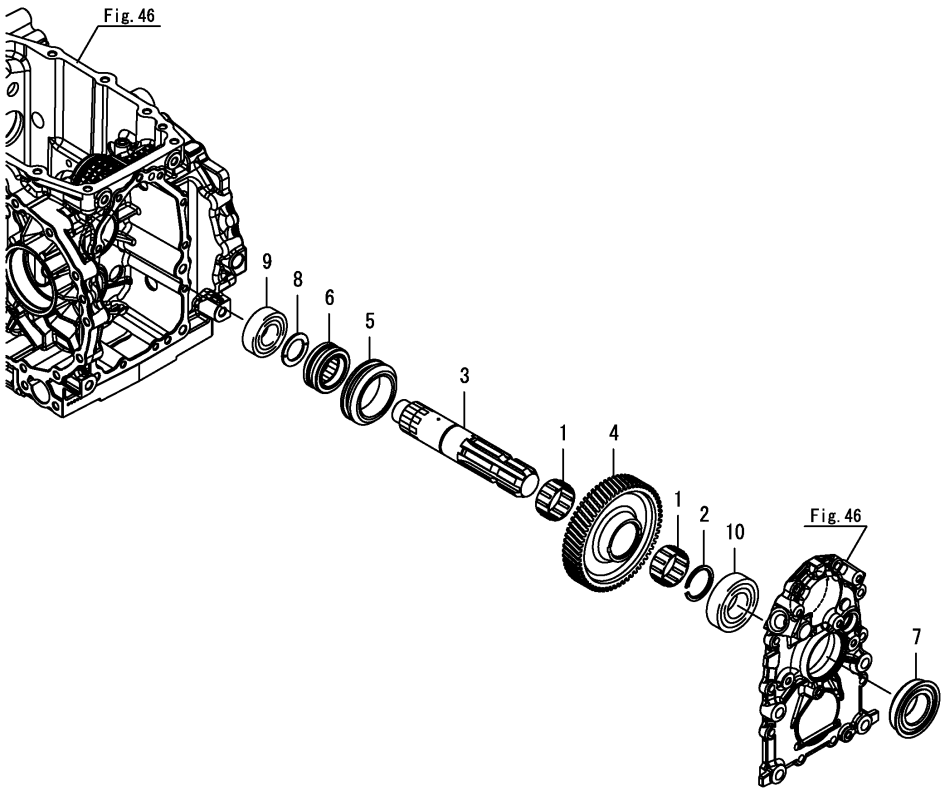

(A)=YT235Y, EU
(B)=
(C)=
(D)=
(E)=
(F)=

No.	Lev.	Parts No.	Description	Q'ty (A)	(B)	(C)	(D)	(E)	(F)	I	R
1	1	194250-25240	BEARING, 354019	2							
2	1	1A8310-25810	CIRCLIP, C35X2	1							
3	1	1A8415-26310	SHAFT, PTO	1							
4	1	1A8415-26320	GEAR, PTO 62	1							
5	1	1A8415-26330	SHIFTER, PTO	1							
6	1	1A8415-26340	COLLAR, SPLINE	1							
7	1	194370-26350	SEAL, OIL QLF356019	1							
8	1	1E6190-54430	WASHER, THRUST C	1							
9	1	24101-062054	BEARING, BALL 6205	1							
10	1	24101-062074	BEARING, BALL 6207	1							

N:Old $\xleftrightarrow[\text{No}]{\text{Yes}}$ New, Q:Old $\xleftrightarrow[\text{Yes}]{\text{No}}$ New, R:Old $\xleftrightarrow[\text{Yes}]{\text{Yes}}$ New, S:Old $\xleftrightarrow[\text{No}]{\text{No}}$ New, W:Add, Z:Discontinued, F:Interchangeable by set, K:Q'ty Change

Copyright (C) 2017 YANMAR GLOBAL CS CO., LTD. All RightsReserved.

Fig.53. P.T.O. VALVE

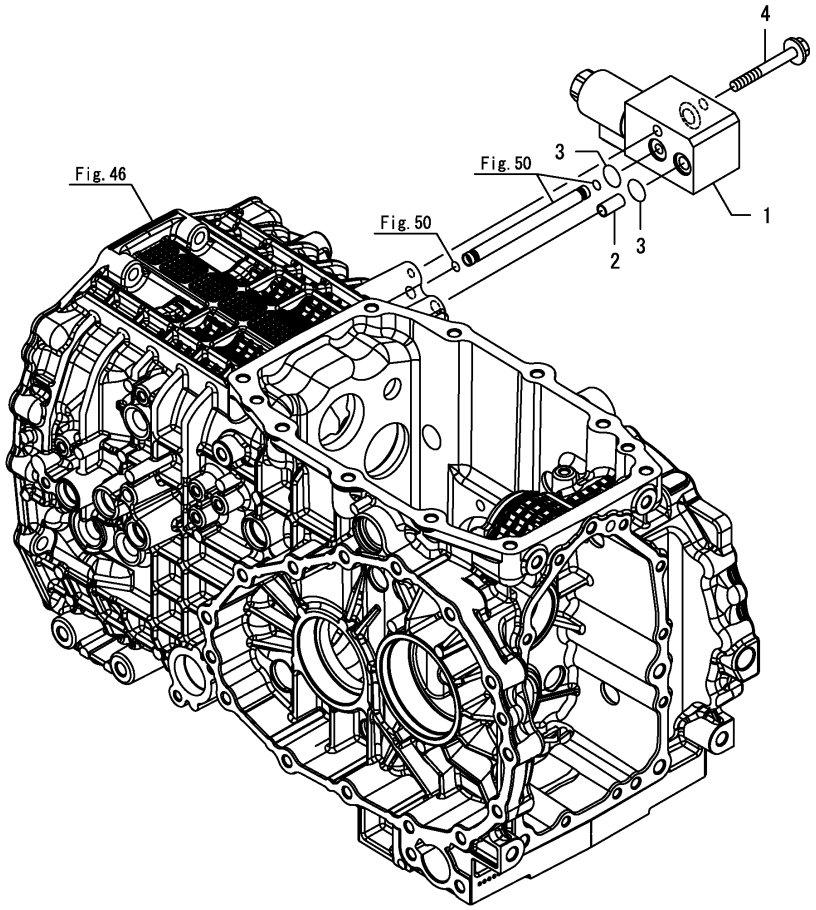

(A)=YT235Y, EU
(B)=
(C)=
(D)=
(E)=
(F)=

No.	Lev.	Parts No.	Description	Q'ty (A)	(B)	(C)	(D)	(E)	(F)	I	R
1	1	1A8415-26810	VALVE ASSY, PTO	1							
2	1	1A8415-26830	PIPE, PTO VALVE	1							
3	1	24311-000140	O-RING, 1AP14.0	2							
4	1	26106-080652	BOLT, M8X 65 PLATED	1							

N:Old $\overset{\text{Yes}}{\underset{\text{No}}{\leftrightarrows}}$ New, Q:Old $\overset{\text{No}}{\underset{\text{Yes}}{\leftrightarrows}}$ New, R:Old $\overset{\text{Yes}}{\underset{\text{Yes}}{\leftrightarrows}}$ New, S:Old $\overset{\text{No}}{\underset{\text{No}}{\leftrightarrows}}$ New, W:Add, Z:Discontinued, F:Interchangeable by set, K:Q'ty Change

Copyright (C) 2017 YANMAR GLOBAL CS CO., LTD. All RightsReserved.

Fig.54. SUB SHIFT

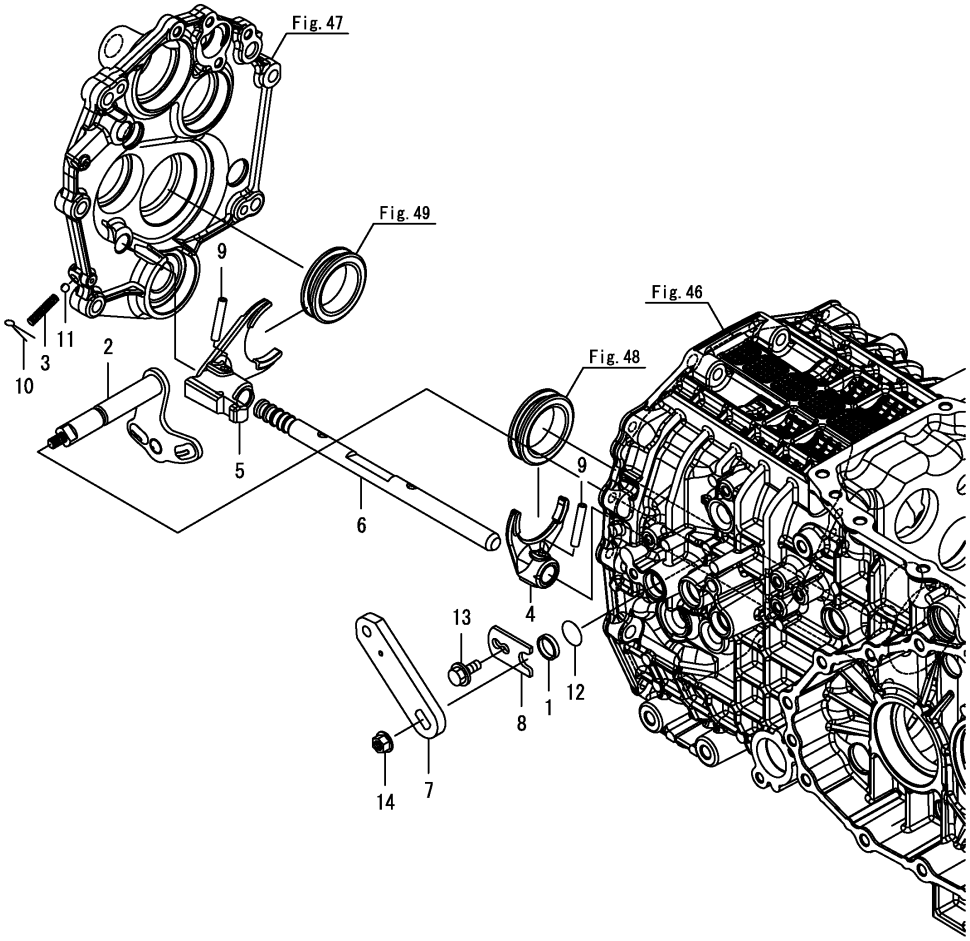

(A)=YT235Y, EU (D)=
(B)= (E)=
(C)= (F)=

No.	Lev.	Parts No.	Description	Q'ty (A)	(B)	(C)	(D)	(E)	(F)	I	R
1	1	198119-27150	COLLAR, SHIFT ARM A	1							
2	1	1A8410-27520	ARM, SHIFT RANGE	1							
3	1	194680-27540	SPRING, FORK LOCK	1							
4	1	1A8410-27550	FORK, SHIFT RANGE	1							
5	1	1A8410-27570	FORK, SHIFT RANGE	1							
6	1	1A8410-27580	SHAFT, FORK RANGE	1							
7	1	1A8410-27720	ARM, CHANGE RANGE	1							
8	1	1A8310-28560	PLATE, KEEP	1							
9	1	22351-060036	PIN, SPRING 6.0X36	2							
10	1	22417-320400	PIN, COTTER 3.2X40	1							
11	1	24190-080001	BALL, STEEL 1/4	1							
12	1	24311-000160	O-RING, 1AP16.0	1							
13	1	26106-080162	BOLT, M8X 16 PLATED	1							
14	1	26366-080002	NUT, M8	1							

N:Old $\overset{\text{Yes}}{\underset{\text{No}}{\leftrightarrows}}$ New, Q:Old $\overset{\text{No}}{\underset{\text{Yes}}{\leftrightarrows}}$ New, R:Old $\overset{\text{Yes}}{\underset{\text{Yes}}{\leftrightarrows}}$ New, S:Old $\overset{\text{No}}{\underset{\text{No}}{\leftrightarrows}}$ New, W:Add, Z:Discontinued, F:Interchangeable by set, K:Q'ty Change

Copyright (C) 2017 YANMAR GLOBAL CS CO., LTD. All RightsReserved.

Fig.55. P.T.O. SHIFT

(A)=YT235Y, EU
(B)=
(C)=
(D)=
(E)=
(F)=

No.	Lev.	Parts No.	Description	Q'ty (A)	(B)	(C)	(D)	(E)	(F)	I	R
1	1	194680-27540	SPRING, FORK LOCK	1							
2	1	198072-27650	ARM, SHIFT 50	1							
3	1	1A8415-27690	SHAFT, FORK PTO	1							
4	1	1A8415-27710	ARM ASSY, SHIFT PTO	1							
5	1	1A8415-27780	FORK, SHIFT PTO	1							
6	1	1A8415-27820	PLATE, SHIFT ARM	1							
7	1	1A8415-27830	COLLAR, 11X20X10	2							
8	1	1A8416-27840	COLLAR, 16X22X16	1							
9	1	22351-060036	PIN, SPRING 6.0X36	3							
10	1	24190-080001	BALL, STEEL 1/4	1							

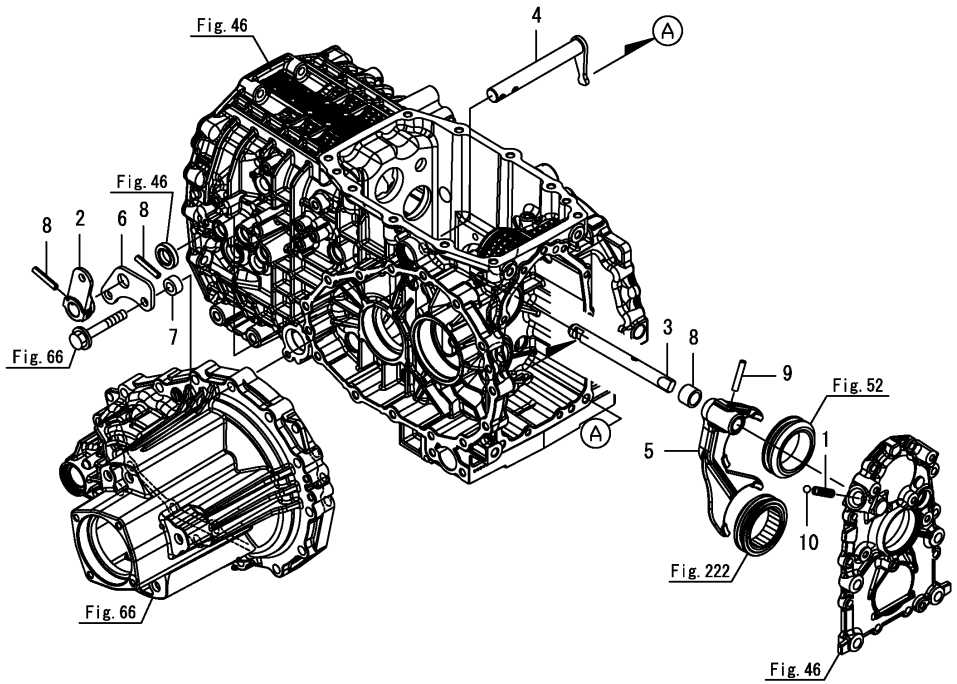

N:Old ←Yes/No→ New, Q:Old ←No/Yes→ New, R:Old ←Yes/Yes→ New, S:Old ←No/No→ New, W:Add, Z:Discontinued, F:Interchangeable by set, K:Q'ty Change

Copyright (C) 2017 YANMAR GLOBAL CS CO., LTD. All RightsReserved.

Fig.56. 4WD DRIVE

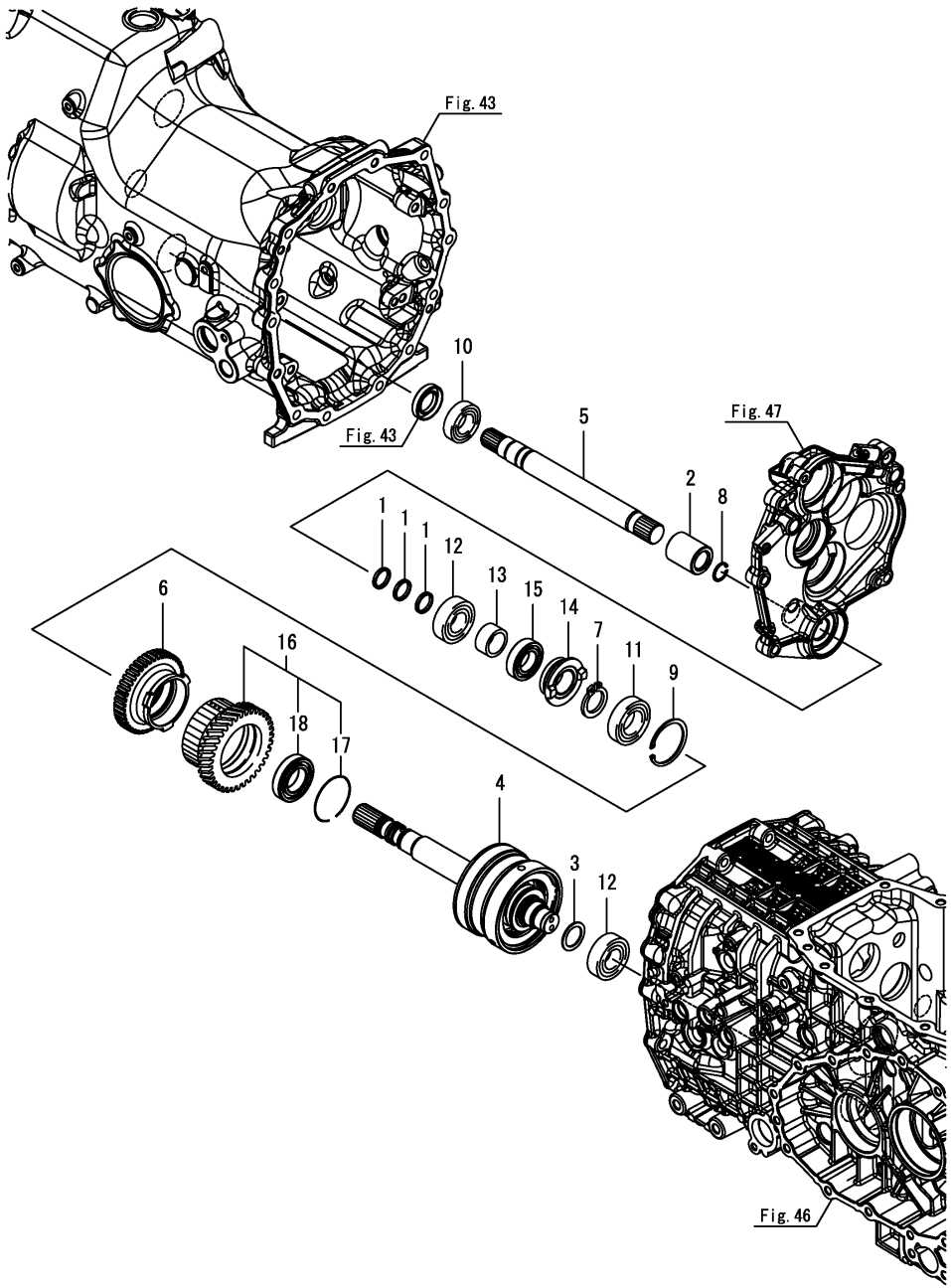

(A)=YT235Y, EU (D)=
(B)= (E)=
(C)= (F)=

No.	Lev.	Parts No.	Description	Q'ty (A)	(B)	(C)	(D)	(E)	(F)	I	R
1	1	198167-26240	RING, SEAL 21X25X3	3							
2	1	194555-26520	COUPLING, PTO	1							
3	1	194190-26840	SPACER, 25X35X1.6	1							
4	1	1A8416-28220	CLUTCH KIT, 4WD	1							
5	1	1A8400-28280	SHAFT, CONECT	1							
6	1	1A8416-28330	GEAR,CLUTCH43 FRONT	1							
7	1	22242-000300	RING, 30	1							
8	1	22252-000220	RING, 22	1							
9	1	22252-000550	RING, 55	1							
10	1	24101-060054	BEARING, BALL 6005	1							
11	1	24101-060064	BEARING, BALL 6006	1							
12	1	24101-062054	BEARING, BALL 6205	2							
13	1	1A8060-25450	COLLAR, 26X34X17	1							
14	1	1A8416-28270	SHIFTER	1							
15	1	24101-060054	BEARING, BALL 6005	1							
16	1	198280-28350	GEAR ASSY, CLUTCH	1							
17	2	198200-28340	CIRCLIP, 55	1							
18	2	24111-060064	BEARING, BALL 6006N	1							

N:Old $\xleftarrow[\text{No}]{\text{Yes}}$ New, Q:Old $\xleftarrow[\text{Yes}]{\text{No}}$ New, R:Old $\xleftarrow[\text{Yes}]{\text{Yes}}$ New, S:Old $\xleftarrow[\text{No}]{\text{No}}$ New, W:Add, Z:Discontinued, F:Interchangeable by set, K:Q'ty Change

Copyright (C) 2017 YANMAR GLOBAL CS CO., LTD. All RightsReserved.

Fig.57. 4WD SHIFT

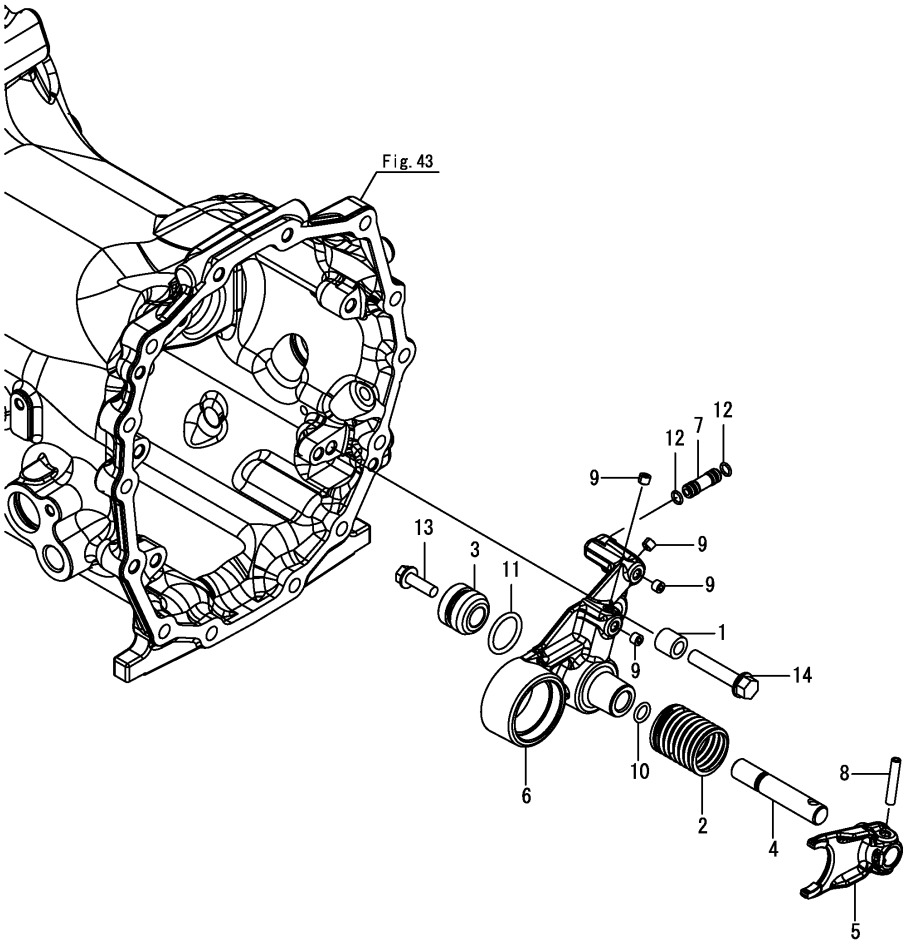

(A)=YT235Y, EU (D)=
(B)= (E)=
(C)= (F)=

No.	Lev.	Parts No.	Description	Q'ty (A)	(B)	(C)	(D)	(E)	(F)	I	R
1	1	1A8416-24360	COLLAR, 11X17X16	1							
2	1	1A8416-28470	SPRING, CLUTCH	1							
3	1	1A8416-28480	PISTON, FWD	1							
4	1	1A8416-28490	SHAFT, FORK FWD	1							
5	1	1A8416-28510	FORK, SHIFT 4WD	1							
6	1	1A8416-28730	HOLDER, FORK SHAFT	1							
7	1	1A8416-28770	PIPE, 4WD	1							
8	1	22351-060036	PIN, SPRING 6.0X36	1							
9	1	23871-005000	PLUG, R005	4							
10	1	24311-000110	O-RING, 1AP11.0	1							
11	1	24311-000260	O-RING, 1AP26.0	1							
12	1	24341-000080	O-RING, 1AS8.0	2							
13	1	26106-080252	BOLT, M8X 25 PLATED	1							
14	1	26106-100502	BOLT, M10X 50 PLATED	1							

N:Old $\overset{\text{Yes}}{\underset{\text{No}}{\leftrightarrows}}$ New, Q:Old $\overset{\text{No}}{\underset{\text{Yes}}{\leftrightarrows}}$ New, R:Old $\overset{\text{Yes}}{\underset{\text{Yes}}{\leftrightarrows}}$ New, S:Old $\overset{\text{No}}{\underset{\text{No}}{\leftrightarrows}}$ New, W:Add, Z:Discontinued, F:Interchangeable by set, K:Q'ty Change

Copyright (C) 2017 YANMAR GLOBAL CS CO., LTD. All RightsReserved.

Fig.58. 4WD VALVE

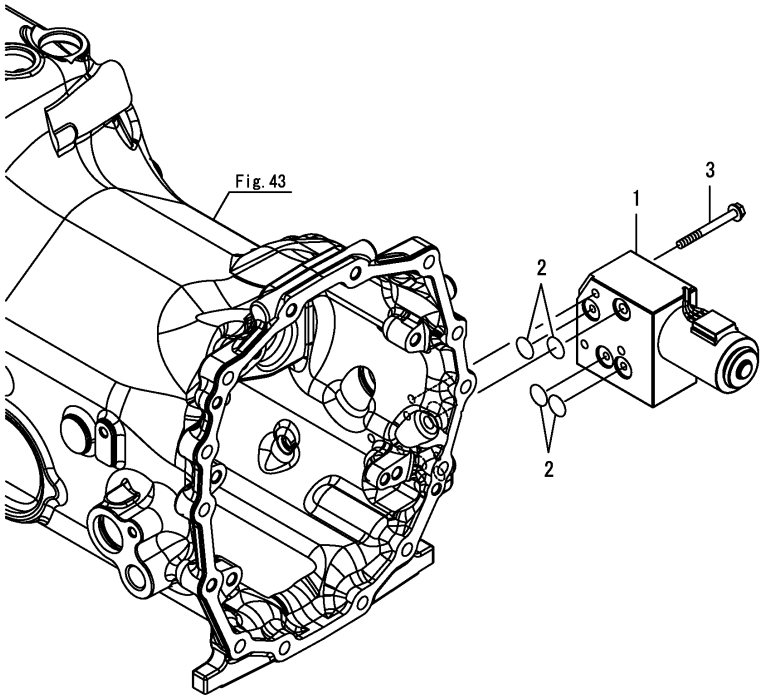

(A)=YT235Y, EU
(B)=
(C)=
(D)=
(E)=
(F)=

No.	Lev.	Parts No.	Description	Q'ty (A)	(B)	(C)	(D)	(E)	(F)	I	R
1	1	1A8416-28540	VALVE ASSY, 4WD	1							
2	1	24311-000140	O-RING, 1AP14.0	4							
3	1	26106-060602	BOLT, M6X 60 PLATED	3							

N:Old $\xleftarrow[\text{No}]{\text{Yes}}$ New, Q:Old $\xleftarrow[\text{Yes}]{\text{No}}$ New, R:Old $\xleftarrow[\text{Yes}]{\text{Yes}}$ New, S:Old $\xleftarrow[\text{No}]{\text{No}}$ New, W:Add, Z:Discontinued, F:Interchangeable by set, K:Q'ty Change

Copyright (C) 2017 YANMAR GLOBAL CS CO., LTD. All RightsReserved.

Fig.59. H.S.T.

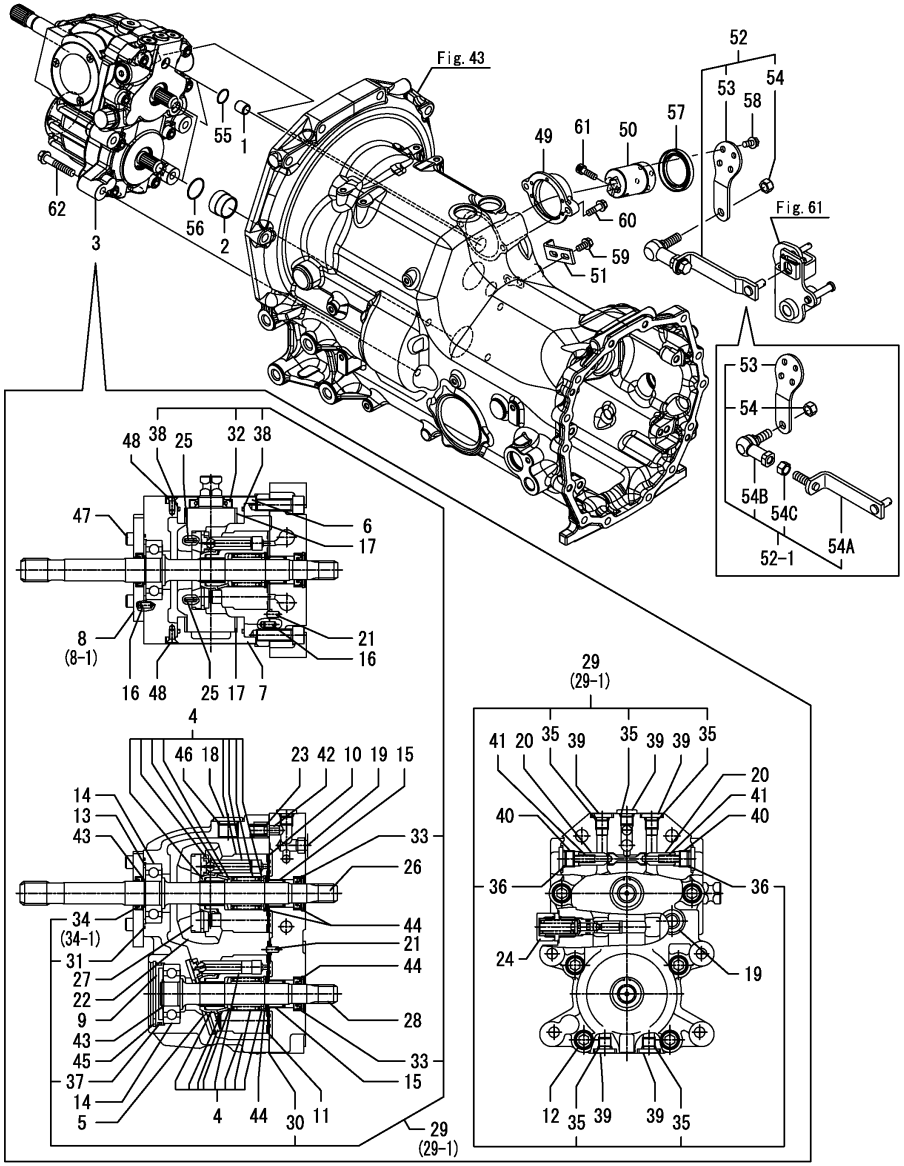

(A)=YT235Y, EU (D)=
(B)= (E)=
(C)= (F)=

No.	Lev.	Parts No.	Description	Q'ty (A)	(B)	(C)	(D)	(E)	(F)	I	R
1	1	198280-24340	COLLAR, 12X16X17	2							
2	1	1A8410-24350	COLLAR, 29X35X24	2							
3	1	1A8410-25150	HST ASSY	1							
3-1	1	1A8410-25151	HST ASSY	1						R	
	(A=F100416)										
4	2	1A7400-29260	BLOCK ASSY, CYLINDER	2							
5	2	1A7400-29310	PLATE, THRUST	1							
6	2	1A7400-29340	COVER	1							
7	2	1A7400-29350	COVER	1							
8	2	1A7400-29360	COVER	1							
8-1	2	1A8410-29980	COVER	1						F	1
	(A=F100416)										
9	2	1A7400-29370	CAP	1							
10	2	1A7400-29380	PLATE, VALVE	1							
11	2	1A7400-29390	PLATE, VALVE	1							
12	2	1A7400-29430	BOLT, SOCKET HEAD	8							
13	2	1A7400-29460	COLLAR	1							
14	2	1A7400-29470	BEARING, BALL	2							
15	2	1A7400-29480	BEARING, NEEDLE	2							
16	2	1A7400-29660	PIN	4							
17	2	1A7400-29670	BUSH	2							
18	2	1A7400-29740	PLUG	1							
19	2	1A7400-29751	PLUG, SHIPPING	2							
20	2	1A7400-29780	VALVE, POPPET	2							
21	2	1A7400-29800	PIN	2							
22	2	198280-29840	PLATE, SWASH	1							
23	2	198280-29870	SPRING	1							
24	2	198280-29890	VALVE ASSY	1							
25	2	198280-29940	ORIFICE	2							
26	2	1A8410-29940	SHAFT	1							
27	2	198280-29950	PLATE, THRUST	1							
28	2	1A8410-29950	SHAFT	1							
29	2	1A8410-29970	REPAIR KIT, SEAL	1							
29-1	2	1A8410-29971	REPAIR KIT, SEAL	1						S	
	(A=F100416)										
30	3	1A7400-29420	GASKET	1							
31	3	1A7400-29450	O-RING	1							
32	3	198280-29880	SEAL, OIL	1							
33	3	198280-29960	SEAL, OIL	2							
34	3	1A8410-29960	SEAL, OIL	1							
34-1	3	1A8410-29961	SEAL, OIL	1						F	1
	(A=F100416)										
35	3	24315-000110	O-RING, 1BP11.0	5							
36	3	24315-000140	O-RING, 1BP14.0	2							
37	3	24321-000600	O-RING, 1AG60.0	1							
38	3	24321-000650	O-RING, 1AG65.0	2							
39	2	172148-70301	PLUG	5							
40	2	172147-70500	PLUG	2							
41	2	172638-73470	SPRING	2							
42	2	172638-73490	VALVE	1							
43	2	22242-000250	RING, 25	2							

Remarks
(1)No.8-1, 34-1 are interchangeable by set.

N:Old $\xleftarrow[\text{No}]{\text{Yes}}$ New, Q:Old $\xleftarrow[\text{Yes}]{\text{No}}$ New, R:Old $\xleftarrow[\text{Yes}]{\text{Yes}}$ New, S:Old $\xleftarrow[\text{No}]{\text{No}}$ New, W:Add, Z:Discontinued, F:Interchangeable by set, K:Q'ty Change

++ CONTINUE ++

Copyright (C) 2017 YANMAR GLOBAL CS CO., LTD. All RightsReserved.

Fig.59. H.S.T.

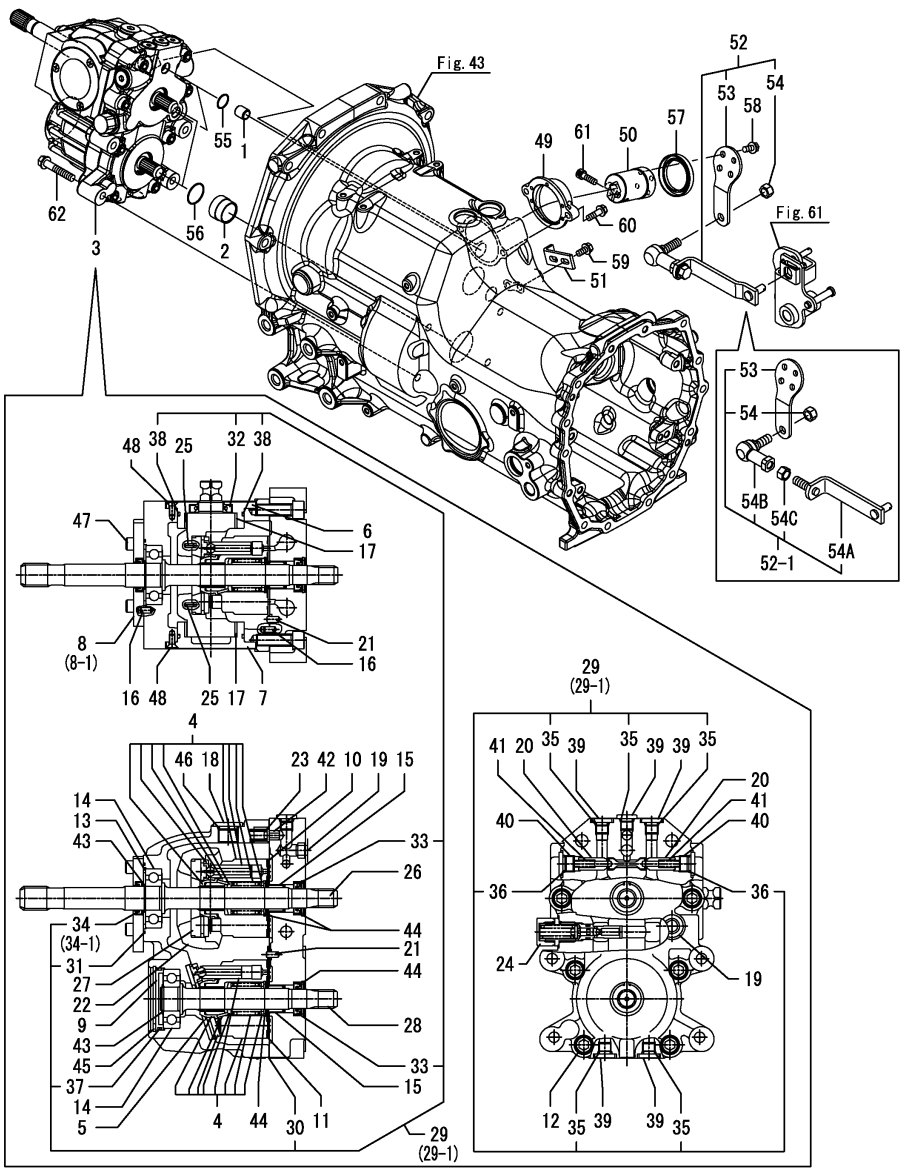

(A)=YT235Y, EU
(B)=
(C)=
(D)=
(E)=
(F)=

No.	Lev.	Parts No.	Description	Q'ty (A)	(B)	(C)	(D)	(E)	(F)	I	R
44	2	22252-000350	RING, 35	4							
45	2	22252-000650	RING, 65	1							
46	2	24315-000180	O-RING, 1BP18.0	1							
47	2	26455-080202	BOLT, M8X20	4							
48	2	26577-060142	SCREW M 6X 14	6							
49	1	1A8410-27020	CASE, SEAL	1							
50	1	1A8410-27232	BOSS, HST TRUNNION	1							
51	1	1A8410-27260	PLATE, STOPPER	1							
52	1	1A8415-29560	ROD UNIT	1							
52-1	1	1A8415-29490	ROD UNIT	1						N	
	(A=F100104)										
53	2	1A8410-27240	ARM, HST TRUNNION	1							
54	2	26346-120002	NUT, M12	1							
54A	2	1A8415-29530	STAY, ROD	1						W	
	(A=F100104)										
54B	2	198280-29570	END, ROD R12	1						W	
	(A=F100104)										
54C	2	26716-120002	NUT, M12	1						W	
	(A=F100104)										
55	1	24311-000160	O-RING, 1AP16.0	2							
56	1	24311-000340	O-RING, 1AP34.0	2							
57	1	24421-456209	SEAL, OIL TC456209	1							
58	1	26106-080162	BOLT, M8X 16 PLATED	4							
59	1	26106-080162	BOLT, M8X 16 PLATED	2							
60	1	26106-080252	BOLT, M8X 25 PLATED	2							
61	1	26450-080252	BOLT, M8X 25	1							
62	1	26106-100552	BOLT, M10X 55 PLATED	4							

Remarks
(1)No.8-1, 34-1 are interchangeable by set.

N:Old $\xleftarrow[\text{No}]{\text{Yes}}$ New, Q:Old $\xleftarrow[\text{Yes}]{\text{No}}$ New, R:Old $\xleftarrow[\text{Yes}]{\text{Yes}}$ New, S:Old $\xleftarrow[\text{No}]{\text{No}}$ New, W:Add, Z:Discontinued, F:Interchangeable by set, K:Q'ty Change

Copyright (C) 2017 YANMAR GLOBAL CS CO., LTD. All RightsReserved.

Fig.60. LINK(H.S.T. CRUISE)

(A)=YT235Y, EU
(B)=
(C)=
(D)=
(E)=
(F)=

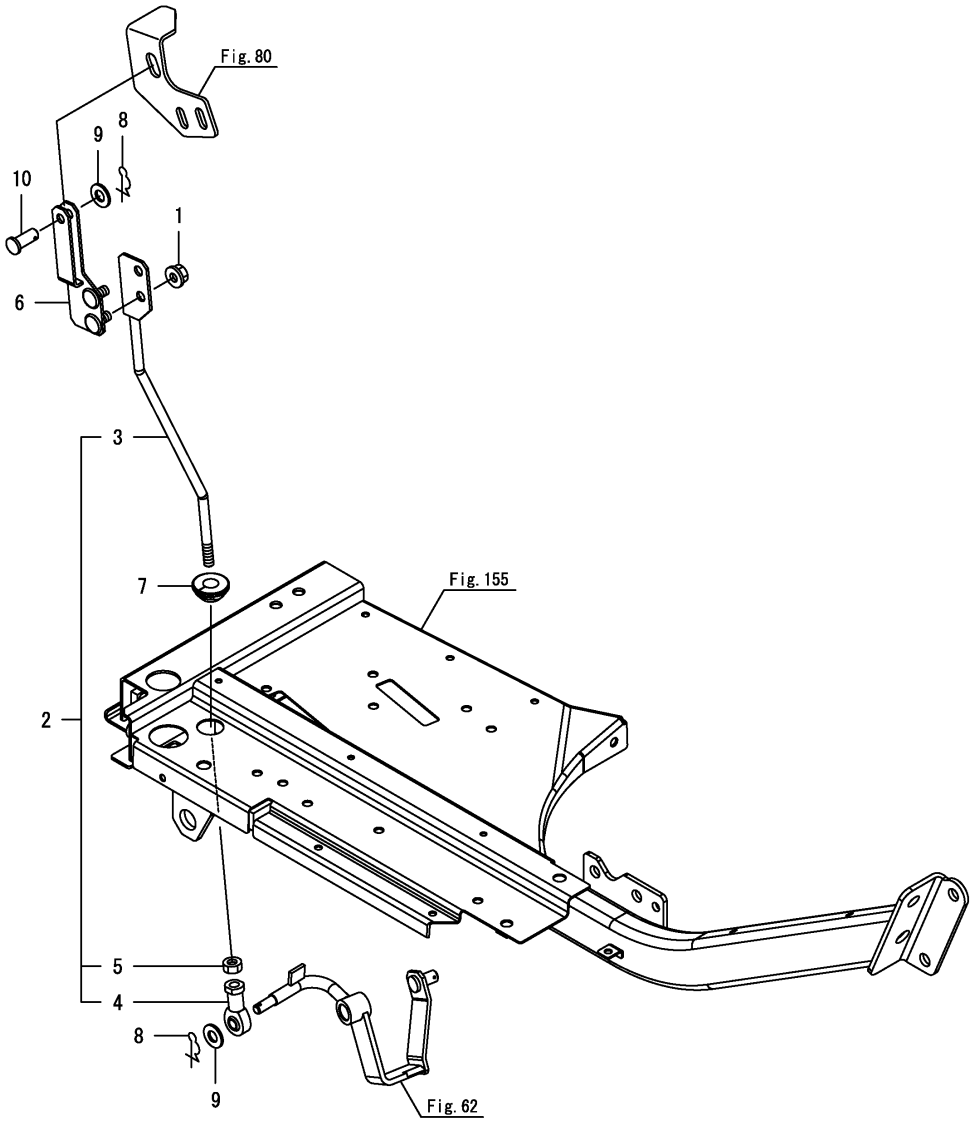

No.	Lev.	Parts No.	Description	Q'ty (A)	(B)	(C)	(D)	(E)	(F)	I	R
1	1	194990-22140	NUT, M8	2							
2	1	1A8405-27520	ROD UNIT, CRUISE A	1							
3	2	1A8405-27530	ROD ASSY, CRUISE A	1							
4	2	172122-46570	END, ROD	1							
5	2	26716-080002	NUT, M8	1							
6	1	1A8405-27560	CLEVIS ASSY, CRUISE	1							
7	1	194170-51210	GROMMET, 25/13	1							
8	1	1C6281-52320	PIN, SNAP 8	2							
9	1	22137-080000	WASHER, 8	2							
10	1	22487-080160	PIN, H 8X 16	1							

N:Old $\xleftrightarrow[\text{No}]{\text{Yes}}$ New, Q:Old $\xleftrightarrow[\text{Yes}]{\text{No}}$ New, R:Old $\xleftrightarrow[\text{Yes}]{\text{Yes}}$ New, S:Old $\xleftrightarrow[\text{No}]{\text{No}}$ New, W:Add, Z:Discontinued, F:Interchangeable by set, K:Q'ty Change

Copyright (C) 2017 YANMAR GLOBAL CS CO., LTD. All RightsReserved.

Fig.61. LINK(H.S.T.)

(A)=YT235Y, EU
(B)=
(C)=
(D)=
(E)=
(F)=

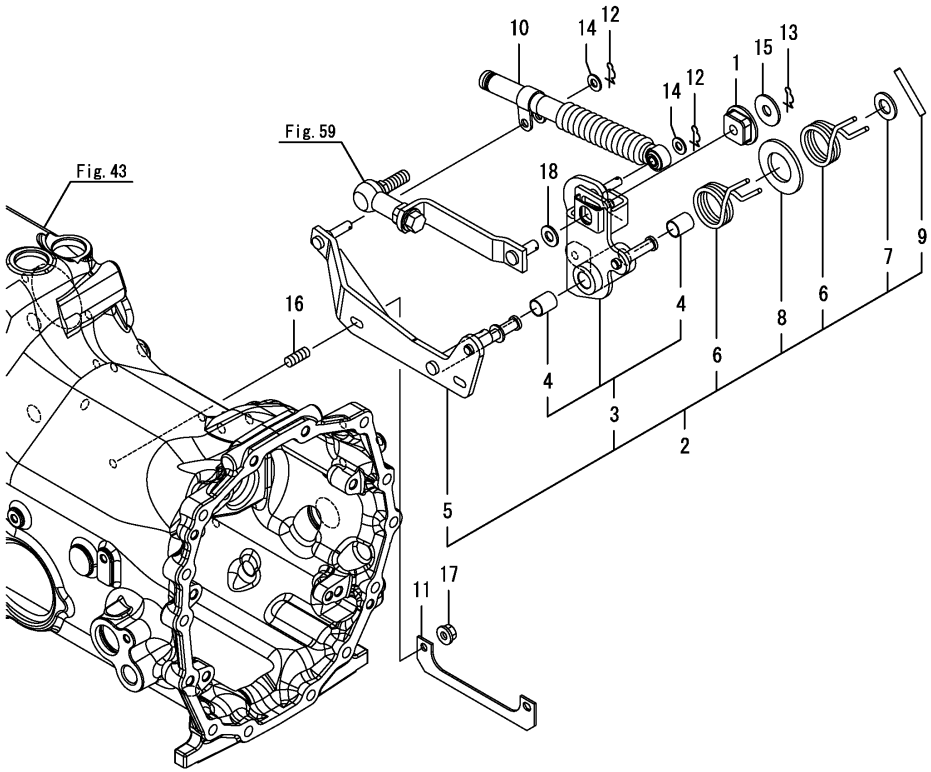

No.	Lev.	Parts No.	Description	Q'ty (A)	(B)	(C)	(D)	(E)	(F)	I	R
1	1	198129-27281	ROLLER, CAM	1							
2	1	1A8415-29010	LINK ASSY, HST	1							
3	2	1A8415-29080	ARM UNIT, A	1							
4	3	24550-015200	BUSH, 15X20	2							
5	2	1A8415-29150	BRACKET ASSY, A	1							
6	2	1A8415-29750	SPRING, NEUTRAL	2							
7	2	22137-140000	WASHER, 14	1							
8	2	22137-300000	WASHER, 30	1							
9	2	22351-060050	PIN, SPRING 6.0X50	1							
10	1	1A8260-29610	ABSORBER, SHOCK	1							
11	1	1A8410-29810	PLATE, BRACKET	1							
12	1	1C6281-52320	PIN, SNAP 8	2							
13	1	1C6360-65700	PIN, SNAP 10	1							
14	1	22137-080000	WASHER, 8	2							
15	1	22157-100000	WASHER, 10	1							
16	1	26218-080202	STUD, M8X 20	2							
17	1	26366-080002	NUT, M8	2							
18	1	22137-100000	WASHER, 10	1						W	

(A=F100396)

N:Old $\frac{\text{Yes}}{\text{No}}$ New, Q:Old $\frac{\text{No}}{\text{Yes}}$ New, R:Old $\frac{\text{Yes}}{\text{Yes}}$ New, S:Old $\frac{\text{No}}{\text{No}}$ New, W:Add, Z:Discontinued, F:Interchangeable by set, K:Q'ty Change

Copyright (C) 2017 YANMAR GLOBAL CS CO., LTD. All RightsReserved.

Fig.62. H.S.T. CONTROL

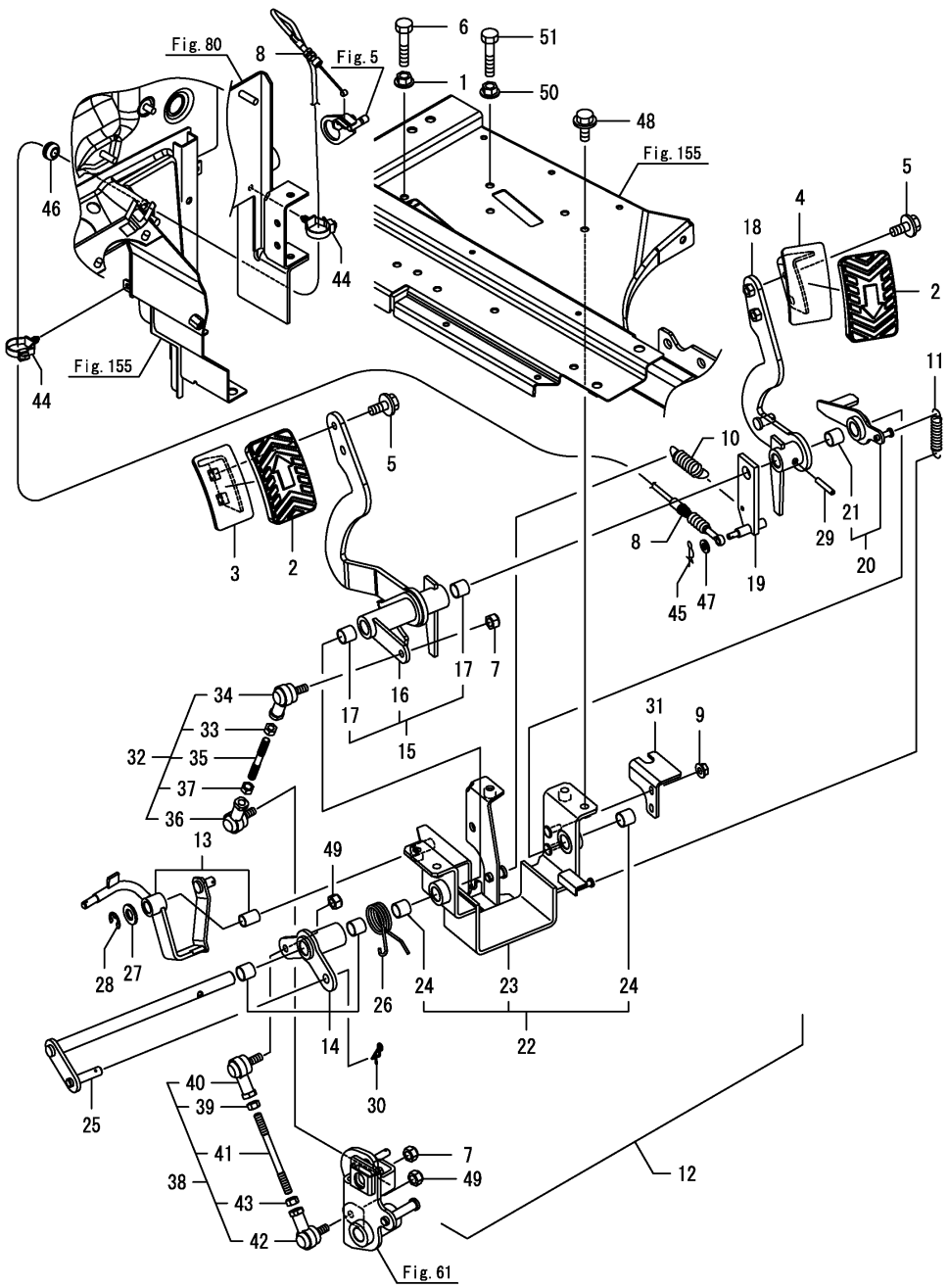

(A)=YT235Y, EU
(B)=
(C)=
(D)=
(E)=
(F)=

No.	Lev.	Parts No.	Description	Q'ty (A)	(B)	(C)	(D)	(E)	(F)	I	R
1	1	194990-22140	NUT, M8	1							
2	1	1A8406-35080	HEAD, PEDAL	2							
3	1	1A8405-35800	HEAD ASSY, PEDAL FW	1							
4	1	1A8405-35850	HEAD ASSY, PEDAL BW	1							
5	1	26106-080162	BOLT, M8X 16 PLATED	4							
6	1	26116-080454	BOLT, M8X 45 PLATED	1							
7	1	26346-080002	NUT, M8	2							
8	1	1A8405-01152	WIRE ASSY,FOOT ACCEL	1							
9	1	194990-22130	NUT, M6	2							
10	1	1C1230-23250	SPRING,SENSOR RETURN	1							
11	1	195545-23770	SPRING, RETURN	1							
12	1	1A8405-29002	PEDAL UNIT, HST	1							
13	2	1A8405-27402	PLATE UNIT, CRUISE	1							
14	2	1A8405-29251	ARM UNIT, BW	1							
15	2	1A8405-29301	PEDAL UNIT, FW	1							
16	3	1A8405-29311	PEDAL ASSY, FW	1							
17	3	24550-015150	BUSH, 15X15	2							
18	2	1A8405-29370	PEDAL ASSY, BW	1							
19	2	1A8405-29400	ARM ASSY, WIRE	1							
20	2	1A8405-29431	ARM UNIT, BW SW	1							
	(A=F100380)										
21	3	24550-015150	BUSH, 15X15	1							
22	2	1A8405-29502	BRACKET UNIT,PEDAL	1							
23	3	1A8405-29512	BRACKET ASSY,PEDAL	1							
24	3	24550-015150	BUSH, 15X15	2							
25	2	1A8405-29601	SHAFT ASSY, PEDAL	1							
26	2	1A8405-29910	SPRING,R LINK	1							
27	2	22137-120000	WASHER, 12	1							
28	2	22272-000100	RING, E-10	1							
29	2	22351-050032	PIN, SPRING 5.0X32	1							
30	2	22372-100000	PIN, SNAP 10	1							
31	1	1A8405-29650	STAY, BW SW	1							
32	1	1A8405-29700	ROD ASSY, 8X120	1							
33	2	194990-20170	NUT, M8	1							
34	2	194820-27370	END, ROD L	1							
35	2	1A8405-29710	ROD, 8X70	1							
36	2	172122-46590	ELBOW, 8	1							
37	2	26716-080002	NUT, M8	1							
38	1	1A8405-29720	ROD ASSY, 8X146	1							
39	2	194990-20170	NUT, M8	1							
40	2	194820-27370	END, ROD L	1							
41	2	1A8405-29730	ROD, 8X100	1							
42	2	172122-46590	ELBOW, 8	1							
43	2	26716-080002	NUT, M8	1							
44	1	1A8275-51670	CLIP, M8 HOLE	2							
45	1	1C6281-52310	PIN, SNAP 6	1							
46	1	198071-58810	GROMMET, 8	1							
47	1	22137-060000	WASHER, 6	1							
48	1	26106-080162	BOLT, M8X 16 PLATED	5							
49	1	26346-080002	NUT, M8	2							
50	1	194990-22140	NUT, M8	1							

N:Old $\xleftarrow[\text{No}]{\text{Yes}}$ New, Q:Old $\xleftarrow[\text{Yes}]{\text{No}}$ New, R:Old $\xleftarrow[\text{Yes}]{\text{Yes}}$ New, S:Old $\xleftarrow[\text{No}]{\text{No}}$ New, W:Add, Z:Discontinued, F:Interchangeable by set, K:Q'ty Change

++ CONTINUE ++

Copyright (C) 2017 YANMAR GLOBAL CS CO., LTD. All RightsReserved.

Fig.62. H.S.T. CONTROL

(A)=YT235Y, EU
(B)=
(C)=
(D)=
(E)=
(F)=

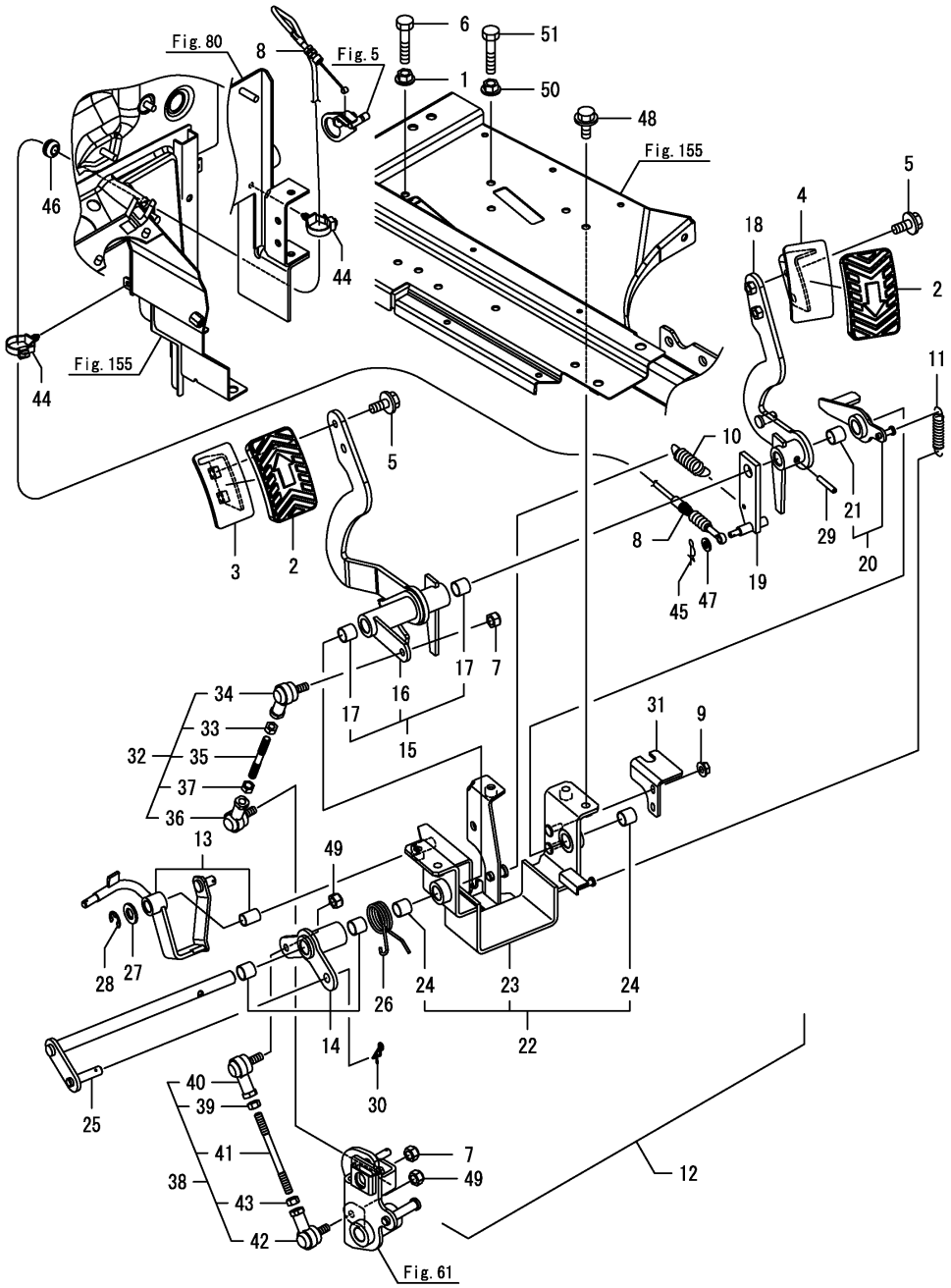

No.	Lev.	Parts No.	Description	Q'ty (A)	(B)	(C)	(D)	(E)	(F)	I	R
51	1	26116-080454	BOLT, M8X 45 PLATED	1							

N:Old ←Yes/No→ New, Q:Old ←No/Yes→ New, R:Old ←Yes/Yes→ New, S:Old ←No/No→ New, W:Add, Z:Discontinued, F:Interchangeable by set, K:Q'ty Change

Copyright (C) 2017 YANMAR GLOBAL CS CO., LTD. All RightsReserved.

Fig.63. RING GEAR

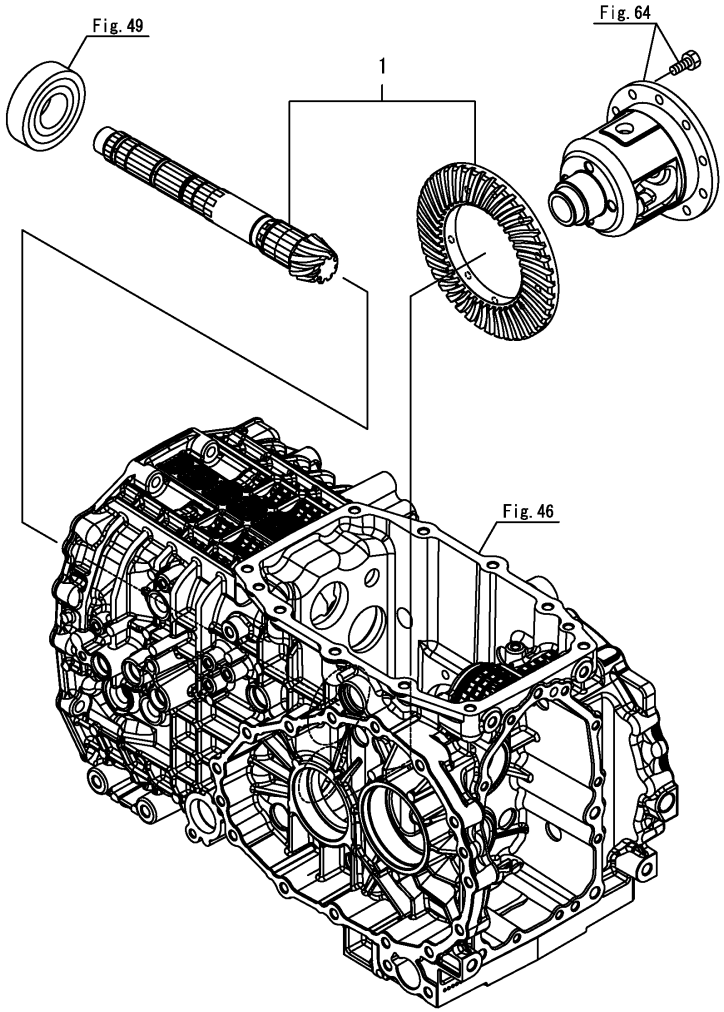

(A)=YT235Y, EU
(B)=
(C)=
(D)=
(E)=
(F)=

No.	Lev.	Parts No.	Description	Q'ty (A)	(B)	(C)	(D)	(E)	(F)	I	R
1	1	1A8400-31400	GEAR ASSY, RING	1							

N:Old $\xleftarrow[\text{No}]{\text{Yes}}$ New, Q:Old $\xleftarrow[\text{Yes}]{\text{No}}$ New, R:Old $\xleftarrow[\text{Yes}]{\text{Yes}}$ New, S:Old $\xleftarrow[\text{No}]{\text{No}}$ New, W:Add, Z:Discontinued, F:Interchangeable by set, K:Q'ty Change

Copyright (C) 2017 YANMAR GLOBAL CS CO., LTD. All RightsReserved.

Fig.64. DIFFERENTIAL GEAR

(A)=YT235Y, EU
(B)=
(C)=
(D)=
(E)=
(F)=

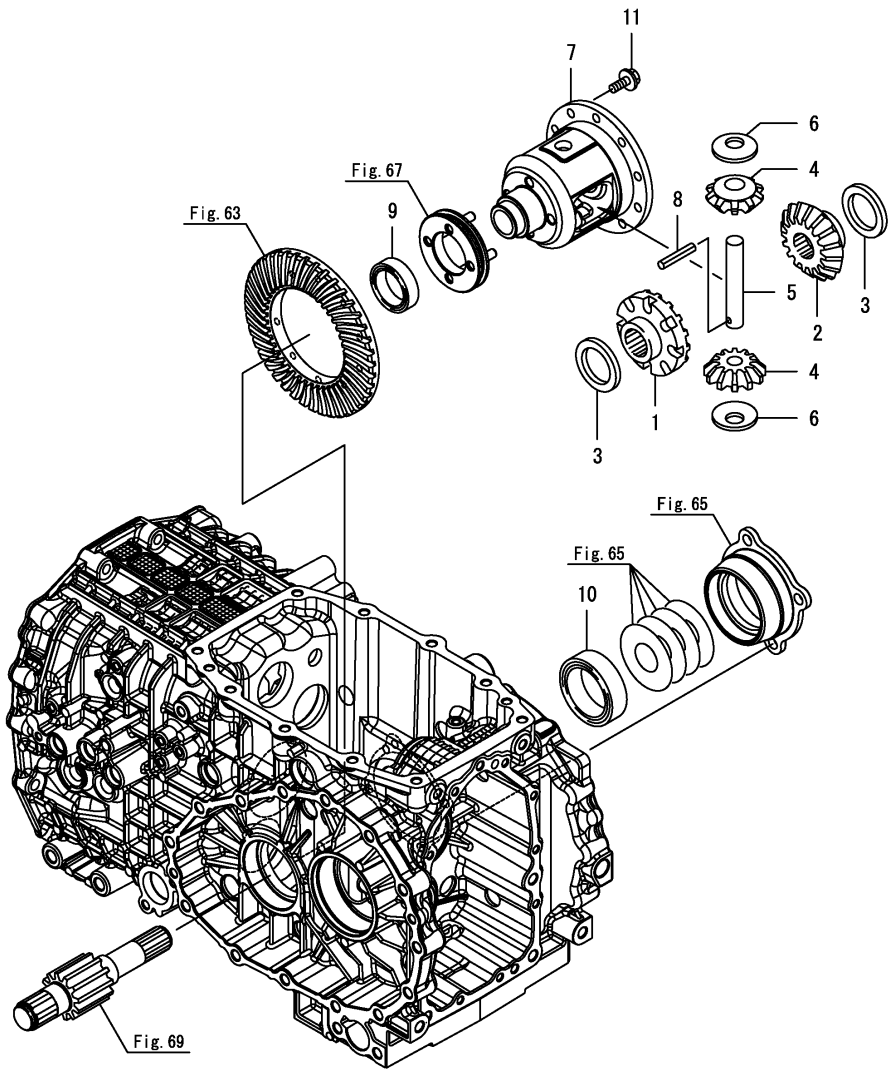

No.	Lev.	Parts No.	Description	Q'ty (A)	(B)	(C)	(D)	(E)	(F)	I	R
1	1	198200-31510	GEAR, DIFF.SIDE L	1							
2	1	194525-31520	GEAR, DIFF.SIDE R	1							
3	1	194515-31610	LINER, SIDE GEAR	2							
4	1	198200-31810	PINION, DIFFERENTIAL	2							
5	1	198200-31820	SHAFT, DIFF.PINION	1							
6	1	194515-31850	LINER, DIFF.PINION	2							
7	1	198200-32110	CASE, DIFFERENTIAL	1							
8	1	22351-040040	PIN, SPRING 4.0X40	1							
9	1	24101-060074	BEARING, BALL 6007	1							
10	1	24101-062074	BEARING, BALL 6207	1							
11	1	26106-080162	BOLT, M8X 16 PLATED	10							

N:Old $\xleftrightarrow[\text{No}]{\text{Yes}}$ New, Q:Old $\xleftrightarrow[\text{Yes}]{\text{No}}$ New, R:Old $\xleftrightarrow[\text{Yes}]{\text{Yes}}$ New, S:Old $\xleftrightarrow[\text{No}]{\text{No}}$ New, W:Add, Z:Discontinued, F:Interchangeable by set, K:Q'ty Change

Copyright (C) 2017 YANMAR GLOBAL CS CO., LTD. All RightsReserved.

Fig.65. DIFFERENTIAL CARRIER

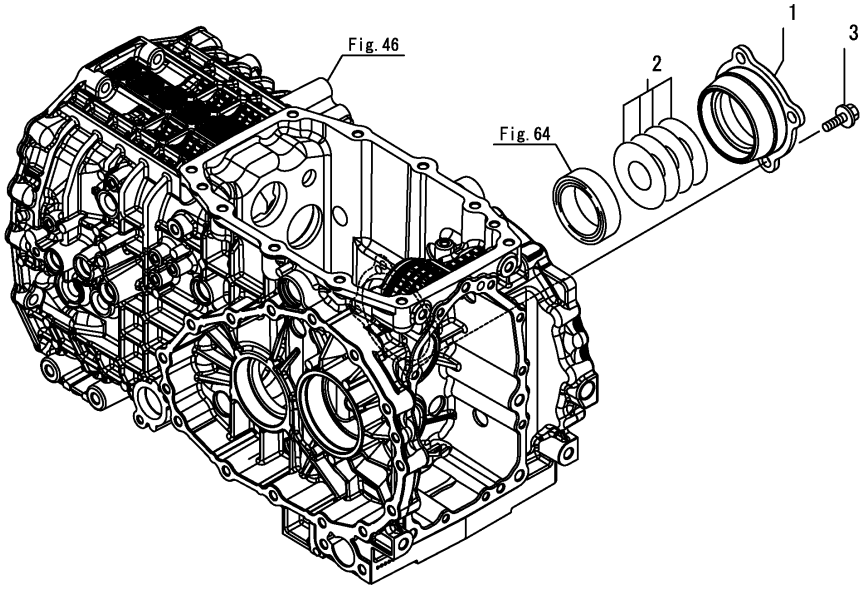

(A)=YT235Y, EU (D)=
(B)= (E)=
(C)= (F)=

No.	Lev.	Parts No.	Description	Q'ty (A)	(B)	(C)	(D)	(E)	(F)	I	R
1	1	198200-32320	CARRIER,DIFFERENTIAL	1							
2	1	194850-32340	SHIM SET	1							
3	1	26106-100252	BOLT, M10X 25 PLATED	4							

N:Old $\xleftrightarrow[\text{No}]{\text{Yes}}$ New, Q:Old $\xleftrightarrow[\text{Yes}]{\text{No}}$ New, R:Old $\xleftrightarrow[\text{Yes}]{\text{Yes}}$ New, S:Old $\xleftrightarrow[\text{No}]{\text{No}}$ New, W:Add, Z:Discontinued, F:Interchangeable by set, K:Q'ty Change

Copyright (C) 2017 YANMAR GLOBAL CS CO., LTD. All RightsReserved.

Fig.66. REAR AXLE HOUSING

(A)=YT235Y, EU
(B)=
(C)=
(D)=
(E)=
(F)=

No.	Lev.	Parts No.	Description	Q'ty (A)	(B)	(C)	(D)	(E)	(F)	I	R
1	1	1A8400-32600	HOUSING ASSY, R-AXLE	2							
2	2	1A8400-32610	HOUSING, REAR AXLE	2							
3	2	198290-32750	SEAL, OIL TC253506	2							
4	1	198475-32660	SEAL, QLNY527514.5	2							
5	1	198200-32731-1	CASE, OIL SEAL	2							
6	1	22312-080140	PIN, PARALLEL M8X14	4							
7	1	26106-080402	BOLT, M8X 40 PLATED	8							
8	1	26106-100502	BOLT, M10X 50 PLATED	26							
9	1	26106-100652	BOLT, M10X 65 PLATED	2							

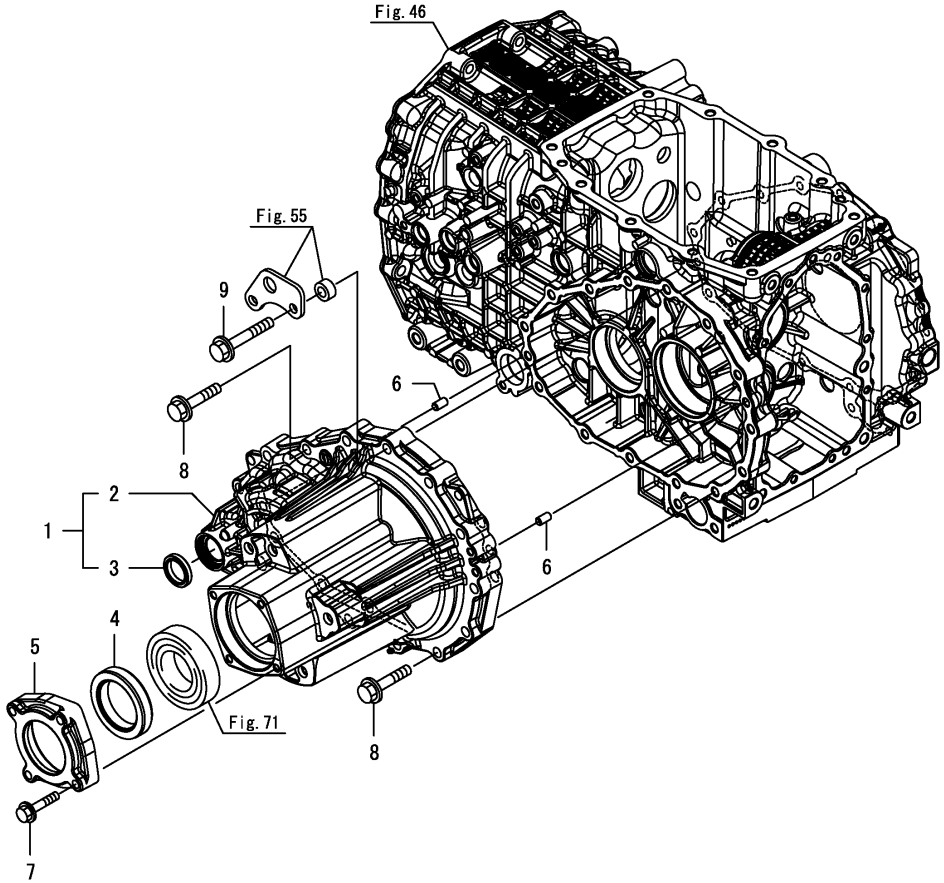

N:Old $\xleftarrow[\text{No}]{\text{Yes}}$ New, Q:Old $\xleftarrow[\text{Yes}]{\text{No}}$ New, R:Old $\xleftarrow[\text{Yes}]{\text{Yes}}$ New, S:Old $\xleftarrow[\text{No}]{\text{No}}$ New, W:Add, Z:Discontinued, F:Interchangeable by set, K:Q'ty Change

Copyright (C) 2017 YANMAR GLOBAL CS CO., LTD. All RightsReserved.

Fig.67. DIFFERENTIAL LOCK

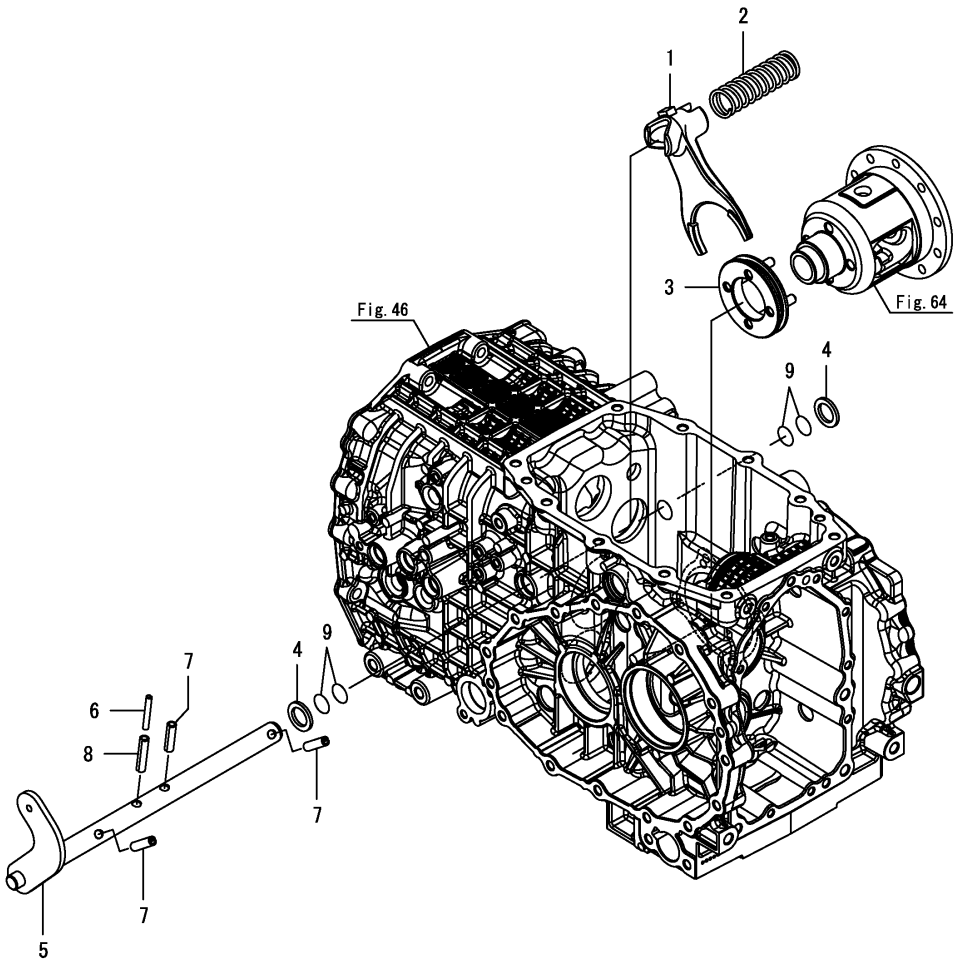

(A)=YT235Y, EU
(B)=
(C)=
(D)=
(E)=
(F)=

No.	Lev.	Parts No.	Description	Q'ty (A)	(B)	(C)	(D)	(E)	(F)	I	R
1	1	198200-33111	FORK, DIFF.LOCK	1							
2	1	194420-33150	SPRING, RETURN	1							
3	1	198200-33150	SLIDER, DIFF.LOCK	1							
4	1	194300-33200	SPACER, 20X32X3.2	2							
5	1	1A8415-33210	SHAFT ASSY,DIFF LOCK	1							
6	1	22351-050040	PIN, SPRING 5.0X40	1							
7	1	22351-080032	PIN, SPRING 8.0X32	3							
8	1	22351-080040	PIN, SPRING 8.0X40	1							
9	1	24311-000200	O-RING, 1AP20.0	4							

N:Old $\xleftarrow[\text{No}]{\text{Yes}}$ New, Q:Old $\xleftarrow[\text{Yes}]{\text{No}}$ New, R:Old $\xleftarrow[\text{Yes}]{\text{Yes}}$ New, S:Old $\xleftarrow[\text{No}]{\text{No}}$ New, W:Add, Z:Discontinued, F:Interchangeable by set, K:Q'ty Change

Copyright (C) 2017 YANMAR GLOBAL CS CO., LTD. All RightsReserved.

Fig.68. DIFFERENTIAL LOCK PEDAL

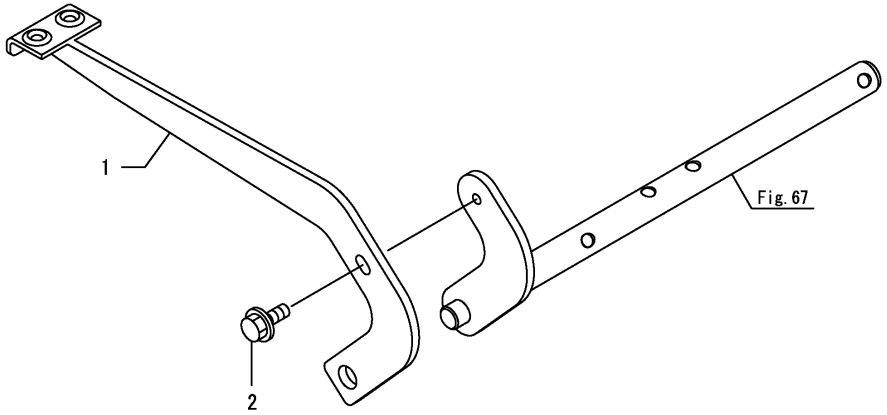

(A)=YT235Y, EU (D)=
(B)= (E)=
(C)= (F)=

No.	Lev.	Parts No.	Description	Q'ty (A)	(B)	(C)	(D)	(E)	(F)	I	R
1	1	1A8070-33250	PEDAL, DIFF.LOCK	1							
2	1	26106-080162	BOLT, M8X 16 PLATED	1							

N:Old $\xleftarrow[\text{No}]{\text{Yes}}$ New, Q:Old $\xleftarrow[\text{Yes}]{\text{No}}$ New, R:Old $\xleftarrow[\text{Yes}]{\text{Yes}}$ New, S:Old $\xleftarrow[\text{No}]{\text{No}}$ New, W:Add, Z:Discontinued, F:Interchangeable by set, K:Q'ty Change

Copyright (C) 2017 YANMAR GLOBAL CS CO., LTD. All RightsReserved.

Fig.69. FINAL PINION

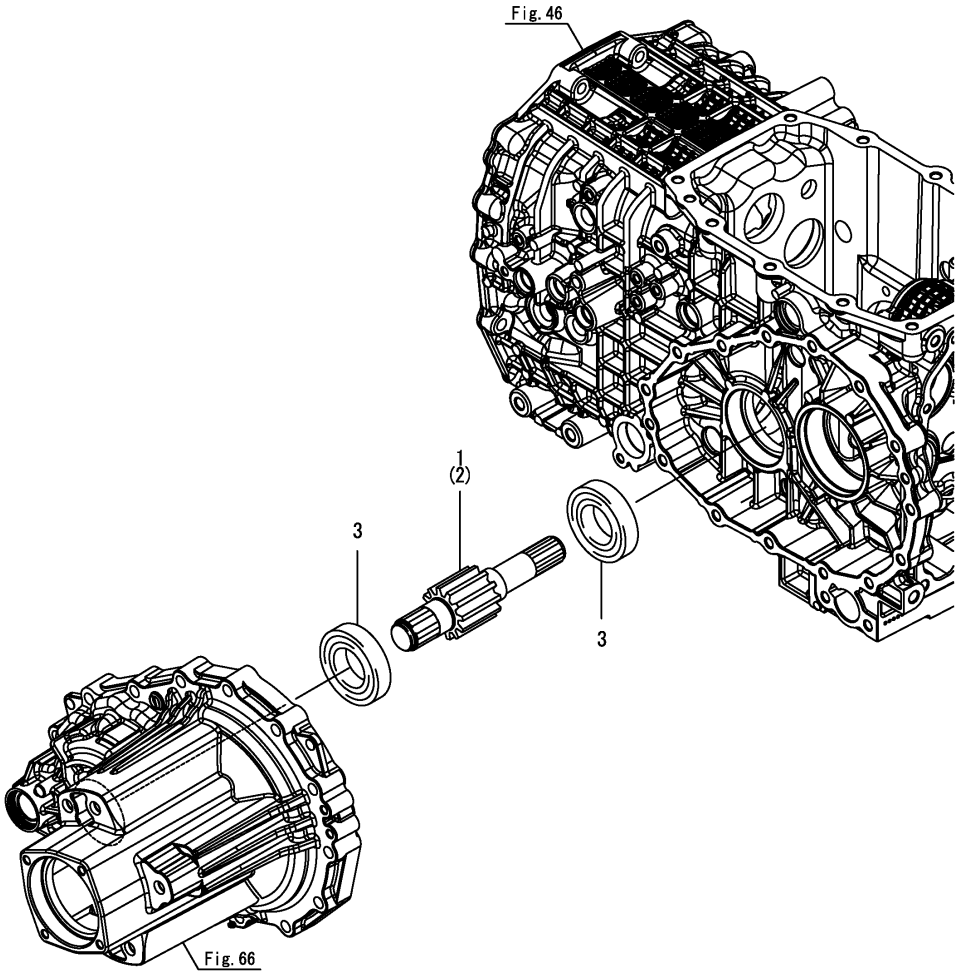

(A)=YT235Y, EU
(B)=
(C)=
(D)=
(E)=
(F)=

No.	Lev.	Parts No.	Description	Q'ty (A)	(B)	(C)	(D)	(E)	(F)	I	R
1	1	198200-33410	PINION, FINAL L 9T	1							
2	1	198200-33420	PINION, FINAL R 9T	1							
3	1	24101-063064	BEARING, BALL 6306	4							

N:Old $\xleftarrow[\text{No}]{\text{Yes}}$ New, Q:Old $\xleftarrow[\text{Yes}]{\text{No}}$ New, R:Old $\xleftarrow[\text{Yes}]{\text{Yes}}$ New, S:Old $\xleftarrow[\text{No}]{\text{No}}$ New, W:Add, Z:Discontinued, F:Interchangeable by set, K:Q'ty Change

Copyright (C) 2017 YANMAR GLOBAL CS CO., LTD. All RightsReserved.

Fig.70. FINAL GEAR

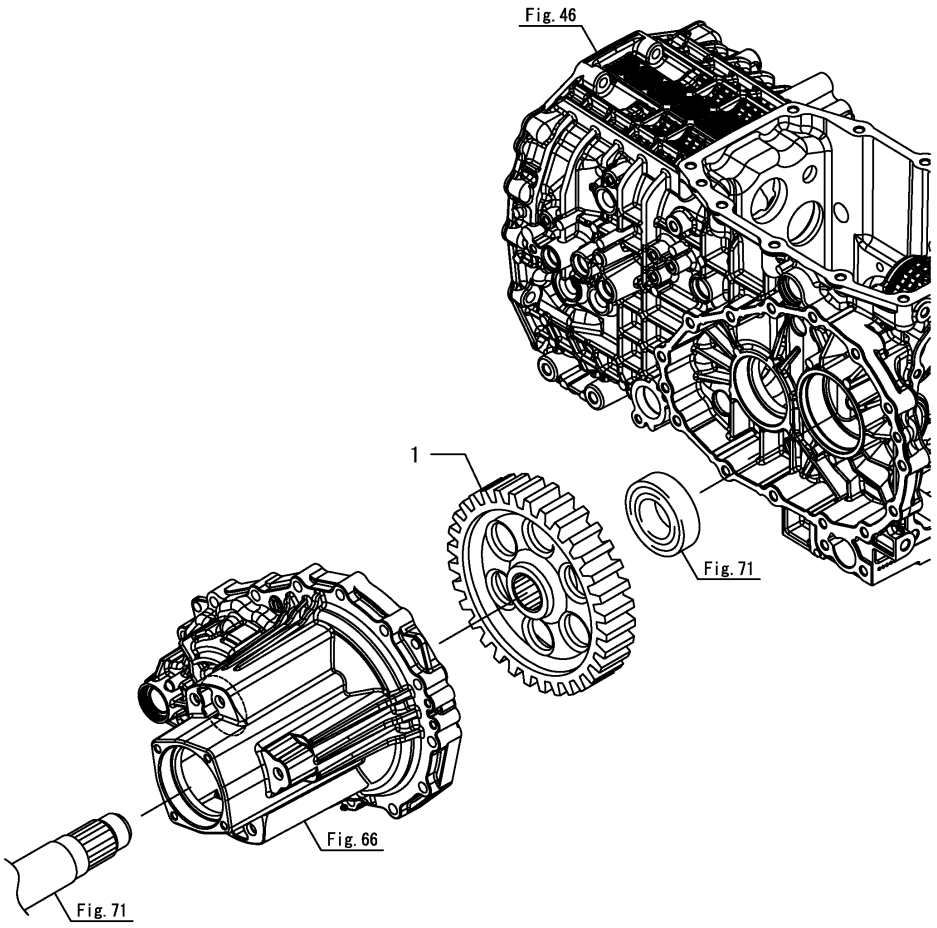

(A)=YT235Y, EU
(B)=
(C)=
(D)=
(E)=
(F)=

No.	Lev.	Parts No.	Description	Q'ty (A)	(B)	(C)	(D)	(E)	(F)	I	R
1	1	198200-33511	GEAR, FINAL Z=56	2							

N:Old $\xleftarrow[\text{No}]{\text{Yes}}$ New, Q:Old $\xleftarrow[\text{Yes}]{\text{No}}$ New, R:Old $\xleftarrow[\text{Yes}]{\text{Yes}}$ New, S:Old $\xleftarrow[\text{No}]{\text{No}}$ New, W:Add, Z:Discontinued, F:Interchangeable by set, K:Q'ty Change

Copyright (C) 2017 YANMAR GLOBAL CS CO., LTD. All RightsReserved.

Fig.71. REAR AXLE SHAFT

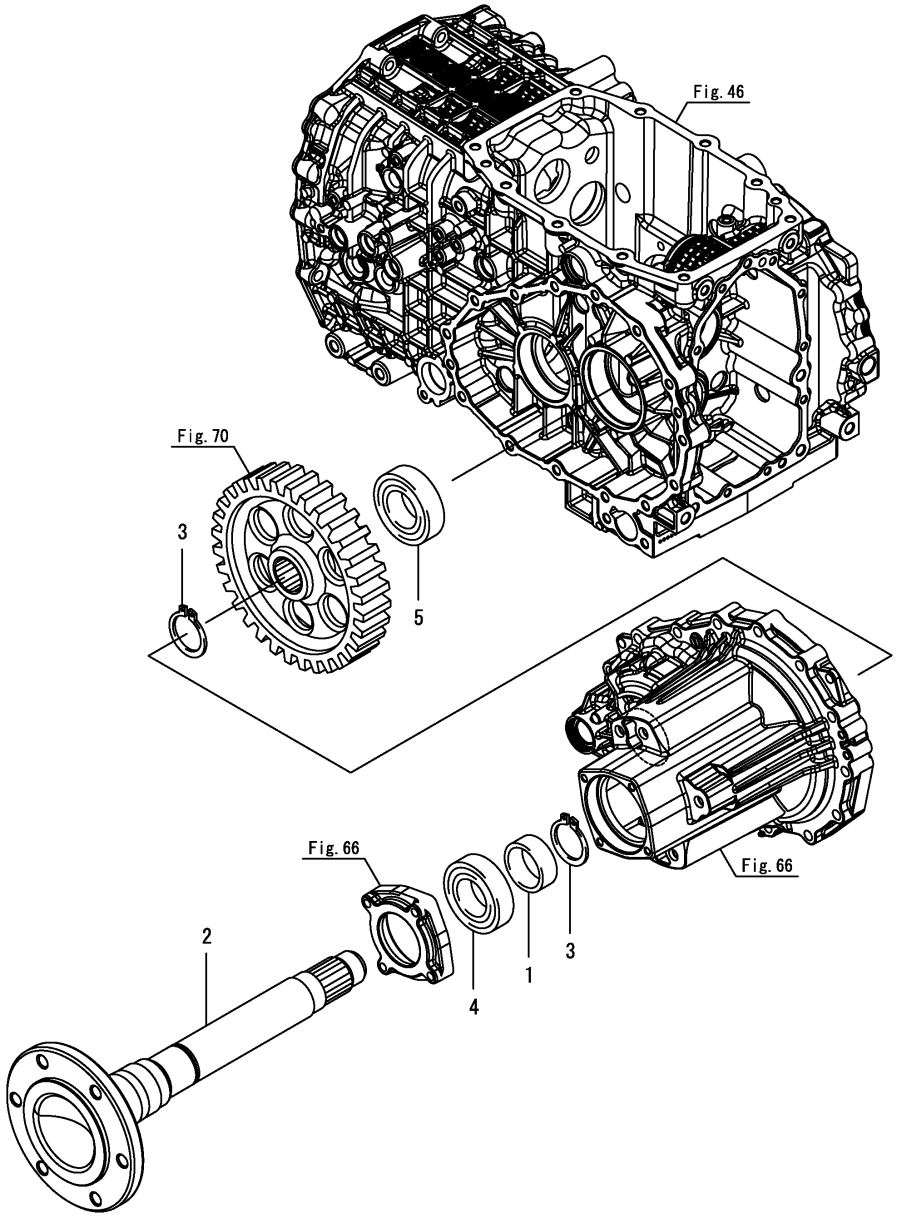

(A)=YT235Y, EU (D)=
(B)= (E)=
(C)= (F)=

No.	Lev.	Parts No.	Description	Q'ty (A)	(B)	(C)	(D)	(E)	(F)	I	R
1	1	194440-32580	COLLAR, 45X55X20	2							
2	1	198200-34111	SHAFT, REAR AXLE	2							
3	1	198196-34140	CIRCLIP, 45	4							
4	1	24101-062094	BEARING, BALL 6209	2							
5	1	24101-063074	BEARING, BALL 6307	2							

N:Old $\xleftarrow[\text{No}]{\text{Yes}}$ New, Q:Old $\xleftarrow[\text{Yes}]{\text{No}}$ New, R:Old $\xleftarrow[\text{Yes}]{\text{Yes}}$ New, S:Old $\xleftarrow[\text{No}]{\text{No}}$ New, W:Add, Z:Discontinued, F:Interchangeable by set, K:Q'ty Change

Copyright (C) 2017 YANMAR GLOBAL CS CO., LTD. All RightsReserved.

Fig.72. REAR WHEEL TIRE(9.5-22)

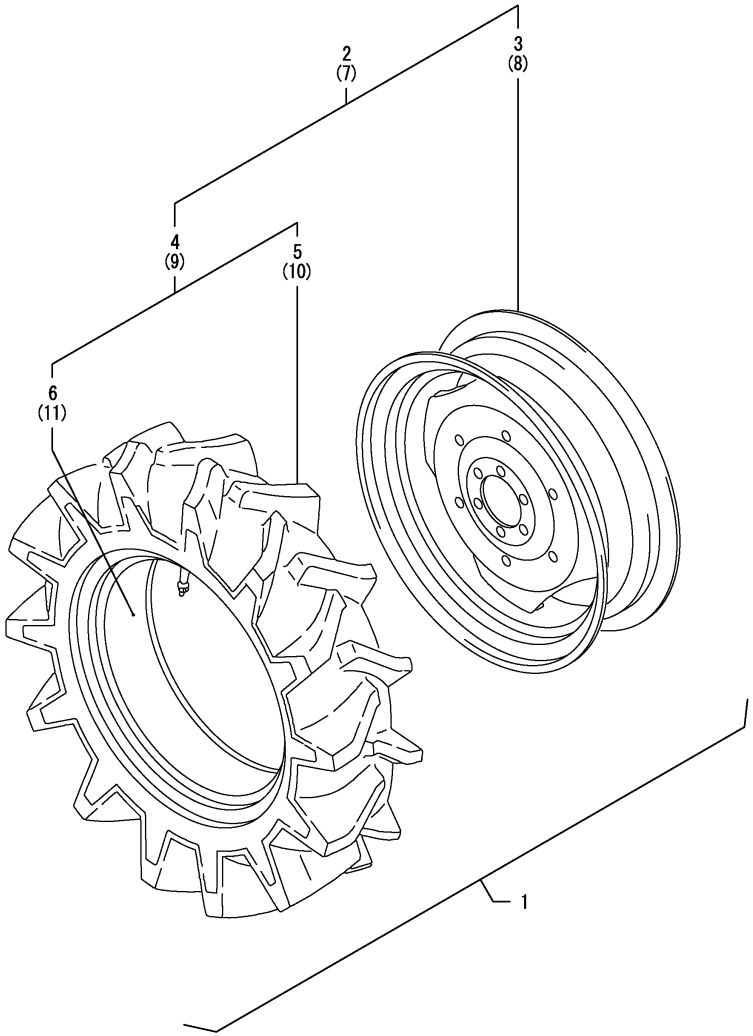

(A)=YT235Y, EU
(B)=
(C)=
(D)=
(E)=
(F)=

No.	Lev.	Parts No.	Description	Q'ty (A)	(B)	(C)	(D)	(E)	(F)	I	R
1	1	1A842E-34200	TIRE ASSY, YT2 AGRI	1							1
2	2	198280-34510-1	TIRE, REAR 9.5-22L	1							
3	3	198200-34650-1	WHEEL, W7X22	1							
4	3	198031-34900	TIRE ASSY, R 9.5X22	1							
5	4	198031-34910	TIRE, REAR 9.5-22	1							
6	4	198031-34920	TUBE, 9.5-22	1							
7	2	198280-34610-1	TIRE, REAR 9.5-22R	1							
8	3	198200-34650-1	WHEEL, W7X22	1							
9	3	198031-34900	TIRE ASSY, R 9.5X22	1							
10	4	198031-34910	TIRE, REAR 9.5-22	1							
11	4	198031-34920	TUBE, 9.5-22	1							

Remarks
(1)No.1 includes Fig.28 and 72.

N:Old $\xleftarrow[\text{No}]{\text{Yes}}$ New, Q:Old $\xleftarrow[\text{Yes}]{\text{No}}$ New, R:Old $\xleftarrow[\text{Yes}]{\text{Yes}}$ New, S:Old $\xleftarrow[\text{No}]{\text{No}}$ New, W:Add, Z:Discontinued, F:Interchangeable by set, K:Q'ty Change

Copyright (C) 2017 YANMAR GLOBAL CS CO., LTD. All RightsReserved.

Fig.73. REAR WHEEL TIRE(15X19.5)

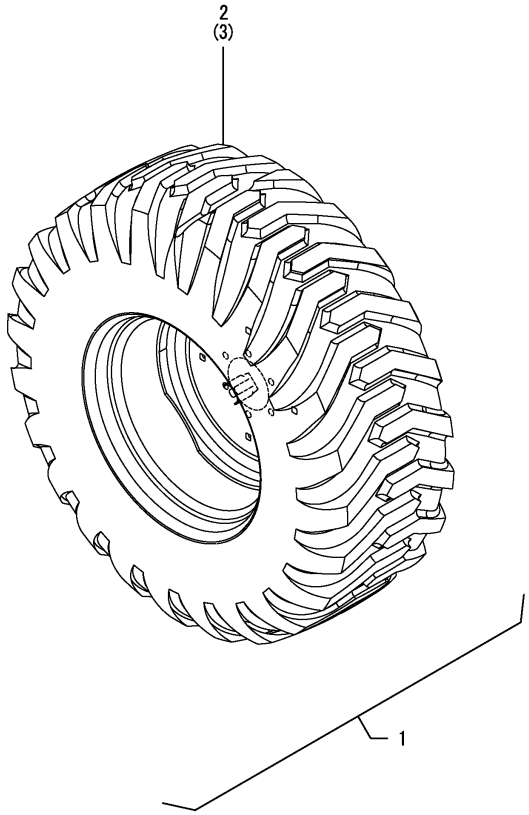

(A)=YT235Y, EU
(B)=
(C)=
(D)=
(E)=
(F)=

No.	Lev.	Parts No.	Description	Q'ty (A)	(B)	(C)	(D)	(E)	(F)	I	R
1	1	1A842E-34220	TIRE ASSY, YT2 IND	1							1
2	2	1A8425-34700	TIRE KIT,REAR R4 L	1							
3	2	1A8425-34800	TIRE KIT, REAR R4 R	1							

Remarks
(1)No.1 includes Fig.30 and 73.

N:Old $\frac{\text{Yes}}{\text{No}}$ New, Q:Old $\frac{\text{No}}{\text{Yes}}$ New, R:Old $\frac{\text{Yes}}{\text{Yes}}$ New, S:Old $\frac{\text{No}}{\text{No}}$ New, W:Add, Z:Discontinued, F:Interchangeable by set, K:Q'ty Change

Copyright (C) 2017 YANMAR GLOBAL CS CO., LTD. All RightsReserved.

Fig.74. REAR WHEEL TIRE(315/80D16)

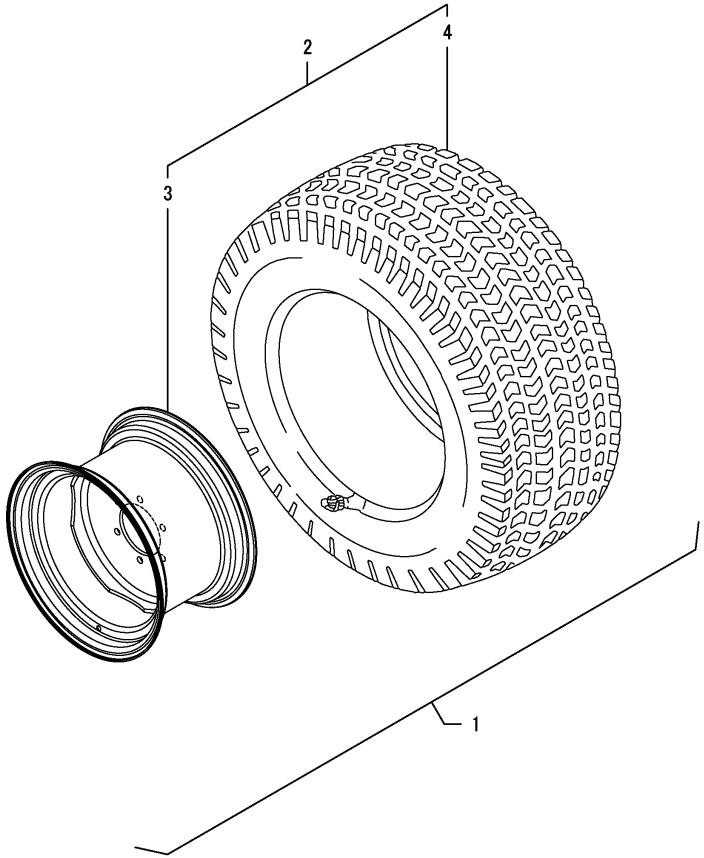

(A)=YT235Y, EU
(B)=
(C)=
(D)=
(E)=
(F)=

No.	Lev.	Parts No.	Description	Q'ty (A)	(B)	(C)	(D)	(E)	(F)	I	R
1	1	1A842E-34210	TIRE ASSY, YT2 TURF	1							1
2	2	1A8426-34720	TIRE UNIT, 315/80D	2							
3	3	1A8426-34740	WHEEL, 16X10LB	2							
4	3	198280-34760	TIRE, 315/80D16-6	2							

Remarks
(1)No.1 includes Fig.29 and 74.

N:Old $\xleftrightarrow[\text{No}]{\text{Yes}}$ New, Q:Old $\xleftrightarrow[\text{Yes}]{\text{No}}$ New, R:Old $\xleftrightarrow[\text{Yes}]{\text{Yes}}$ New, S:Old $\xleftrightarrow[\text{No}]{\text{No}}$ New, W:Add, Z:Discontinued, F:Interchangeable by set, K:Q'ty Change

Copyright (C) 2017 YANMAR GLOBAL CS CO., LTD. All RightsReserved.

Fig.75. REAR WHEEL TIRE(320/70R20)

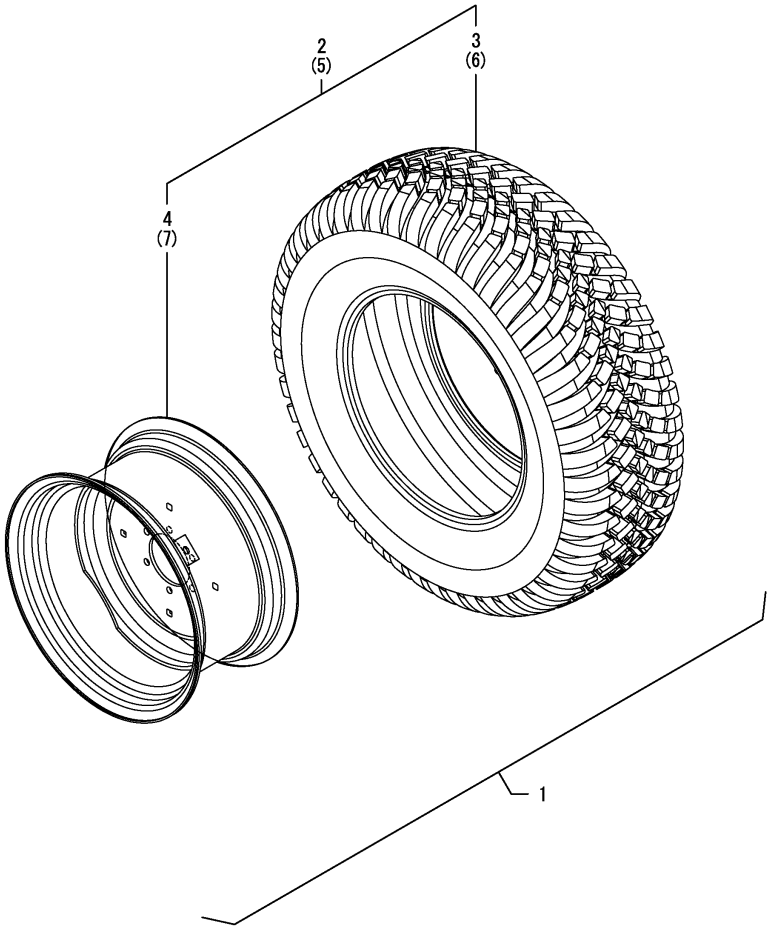

(A)=YT235Y, EU
(B)=
(C)=
(D)=
(E)=
(F)=

No.	Lev.	Parts No.	Description	Q'ty (A)	(B)	(C)	(D)	(E)	(F)	I	R
1	1	1A842E-34230	TIRE ASSY, YT2 GPR	1							1
2	2	1A8426-34780	TIRE UNIT,L G-PRO	1							
3	3	1A8426-34790	TIRE, REAR G-PRO	1							
4	3	1A8426-34810	WHEEL ASSY, R G-PRO	1							
5	2	1A8426-34880	TIRE UNIT,R G-PRO	1							
6	3	1A8426-34790	TIRE, REAR G-PRO	1							
7	3	1A8426-34810	WHEEL ASSY, R G-PRO	1							

Remarks
(1)No.1 includes Fig.31 and 75.

N:Old $\xleftrightarrow[\text{No}]{\text{Yes}}$ New, Q:Old $\xleftrightarrow[\text{Yes}]{\text{No}}$ New, R:Old $\xleftrightarrow[\text{Yes}]{\text{Yes}}$ New, S:Old $\xleftrightarrow[\text{No}]{\text{No}}$ New, W:Add, Z:Discontinued, F:Interchangeable by set, K:Q'ty Change

Copyright (C) 2017 YANMAR GLOBAL CS CO., LTD. All RightsReserved.

Fig.76. HUB BOLT

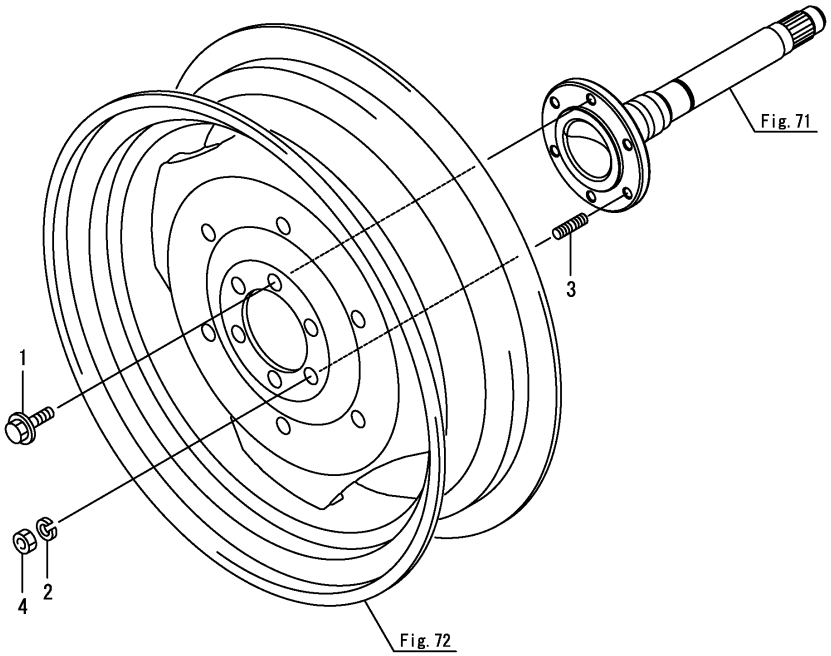

(A)=YT235Y, EU (D)=
(B)= (E)=
(C)= (F)=

No.	Lev.	Parts No.	Description	Q'ty (A)	(B)	(C)	(D)	(E)	(F)	I	R
1	1	198133-34130	BOLT, M14X30	8							
2	1	194279-14220	WASHER, LOCK 14	4							
3	1	198200-34130	STUD, 14X31	4							
4	1	198200-34190	NUT, M14	4							

N:Old $\xleftarrow[\text{No}]{\text{Yes}}$ New, Q:Old $\xleftarrow[\text{Yes}]{\text{No}}$ New, R:Old $\xleftarrow[\text{Yes}]{\text{Yes}}$ New, S:Old $\xleftarrow[\text{No}]{\text{No}}$ New, W:Add, Z:Discontinued, F:Interchangeable by set, K:Q'ty Change

Copyright (C) 2017 YANMAR GLOBAL CS CO., LTD. All RightsReserved.

Fig.77. PARKING BRAKE

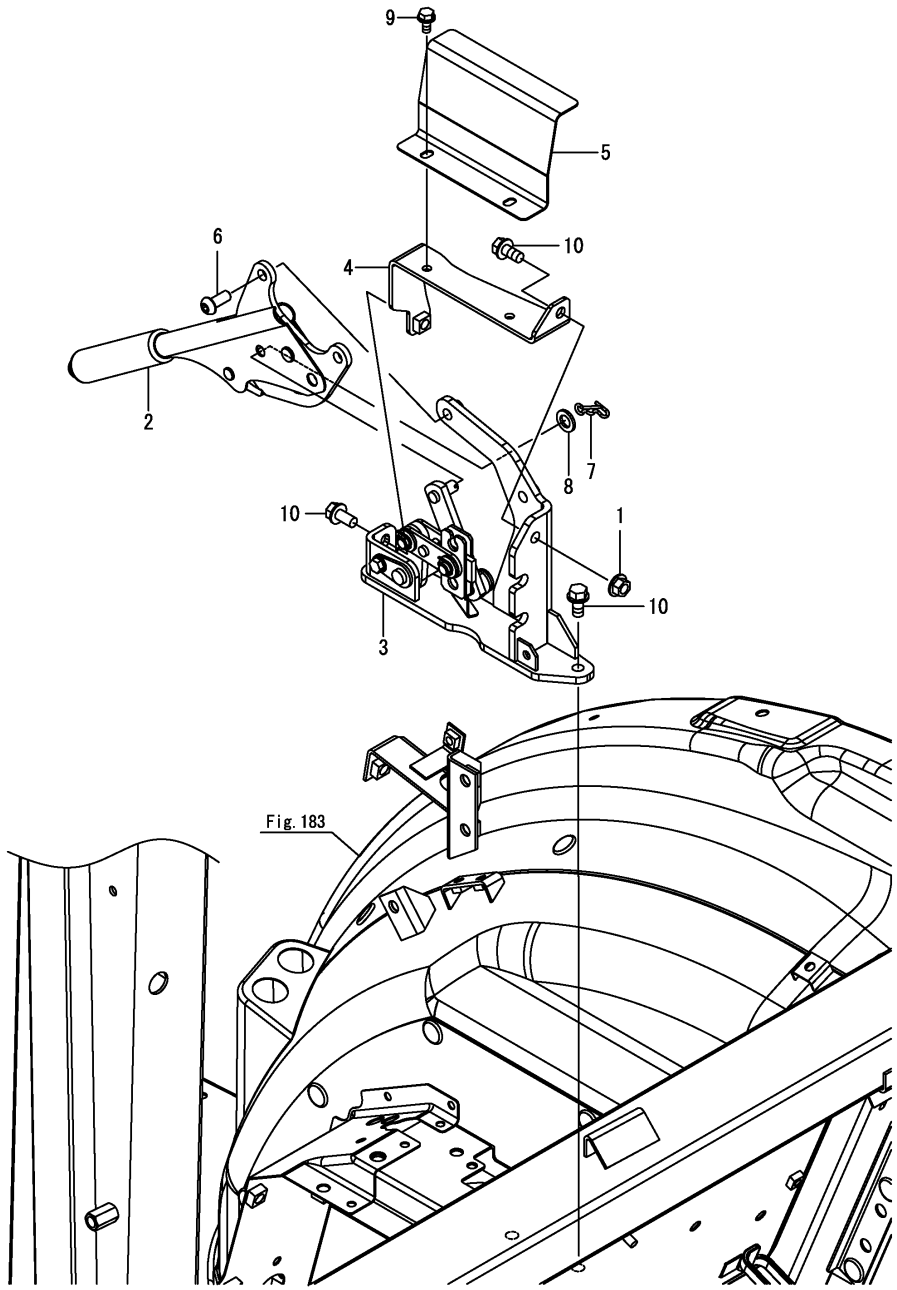

(A)=YT235Y, EU
(B)=
(C)=
(D)=
(E)=
(F)=

No.	Lev.	Parts No.	Description	Q'ty (A)	(B)	(C)	(D)	(E)	(F)	I	R
1	1	194990-22140	NUT, M8	1							
2	1	1A8060-38400	BRAKE ASSY, PARKING	1							
3	1	1A8406-38501	LINK UNIT, PARKING	1							
4	1	1A8406-38811	COVER ASSY, LINK	1							
5	1	1A8406-38831	COVER, PARKING LEVER	1							
6	1	1A8486-58320	BOLT, 8X20	2							
7	1	1C6360-65700	PIN, SNAP 10	1							
8	1	22117-100000	WASHER, 10	1							
9	1	26106-060122	BOLT, M6X 12 PLATED	2							
10	1	26106-080162	BOLT, M8X 16 PLATED	5							

N:Old $\xleftrightarrow[\text{No}]{\text{Yes}}$ New, Q:Old $\xleftrightarrow[\text{Yes}]{\text{No}}$ New, R:Old $\xleftrightarrow[\text{Yes}]{\text{Yes}}$ New, S:Old $\xleftrightarrow[\text{No}]{\text{No}}$ New, W:Add, Z:Discontinued, F:Interchangeable by set, K:Q'ty Change

Copyright (C) 2017 YANMAR GLOBAL CS CO., LTD. All RightsReserved.

Fig.78. BRAKE

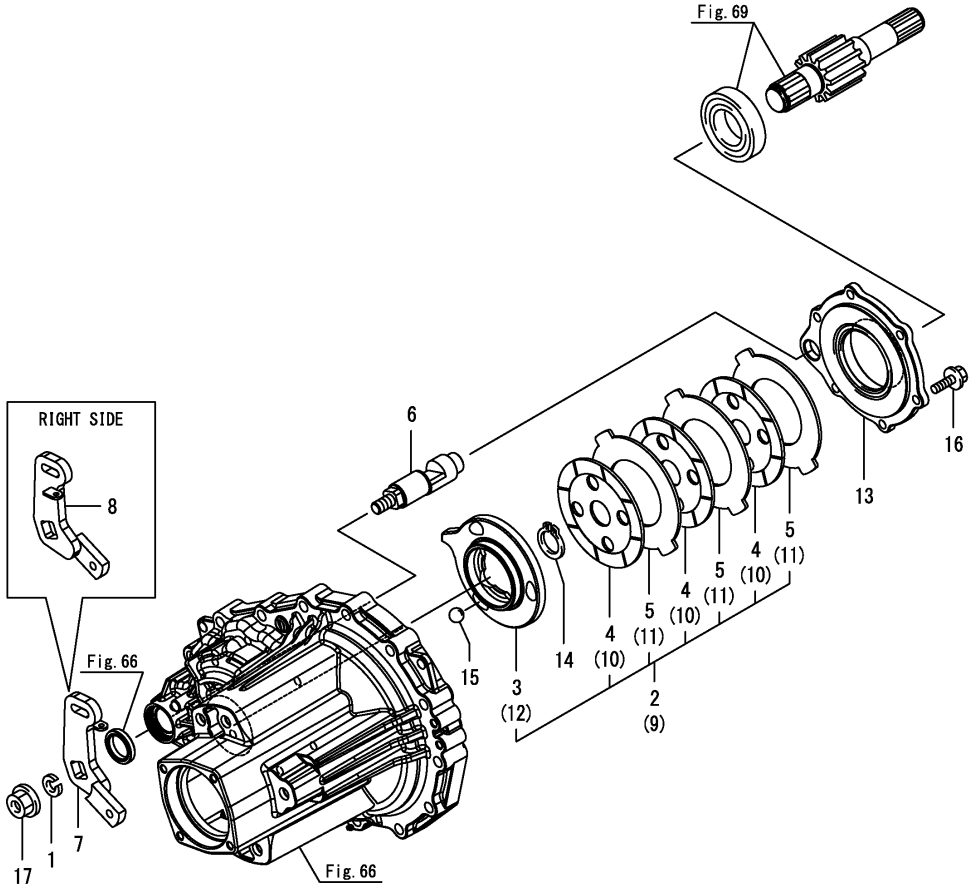

(A)=YT235Y, EU (D)=
(B)= (E)=
(C)= (F)=

No.	Lev.	Parts No.	Description	Q'ty (A)	(B)	(C)	(D)	(E)	(F)	I	R
1	1	194274-13580	WASHER, SPRING 12	2							
2	1	1A8400-36300	BRAKE KIT,L	1							
3	2	1A8310-36310	ACTUATOR, L	1							
4	2	1A8400-36380	DISK, FRICTION 114	3							
5	2	198200-36390	PLATE, STEEL	3							
6	1	198200-36341	CAMSHAFT	2							
7	1	1A8406-36110	ARM ASSY, BRAKE L	1							
8	1	1A8406-36120	ARM ASSY, BRAKE R	1							
9	1	1A8400-36400	BRAKE KIT,R	1							
10	2	1A8400-36380	DISK, FRICTION 114	3							
11	2	198200-36390	PLATE, STEEL	3							
12	2	1A8310-36410	ACTUATOR, R	1							
13	1	198200-36422	HOLDER, BEARING	2							
14	1	22242-000260	RING, 26	2							
15	1	24190-170001	BALL, STEEL 17/32	6							
16	1	26106-080202	BOLT, M8X 20 PLATED	12							
17	1	26376-120002	NUT, M12	2							

N:Old $\xleftrightarrow[\text{No}]{\text{Yes}}$ New, Q:Old $\xleftrightarrow[\text{Yes}]{\text{No}}$ New, R:Old $\xleftrightarrow[\text{Yes}]{\text{Yes}}$ New, S:Old $\xleftrightarrow[\text{No}]{\text{No}}$ New, W:Add, Z:Discontinued, F:Interchangeable by set, K:Q'ty Change

Copyright (C) 2017 YANMAR GLOBAL CS CO., LTD. All RightsReserved.

Fig.79. PARKING BRAKE WIRE

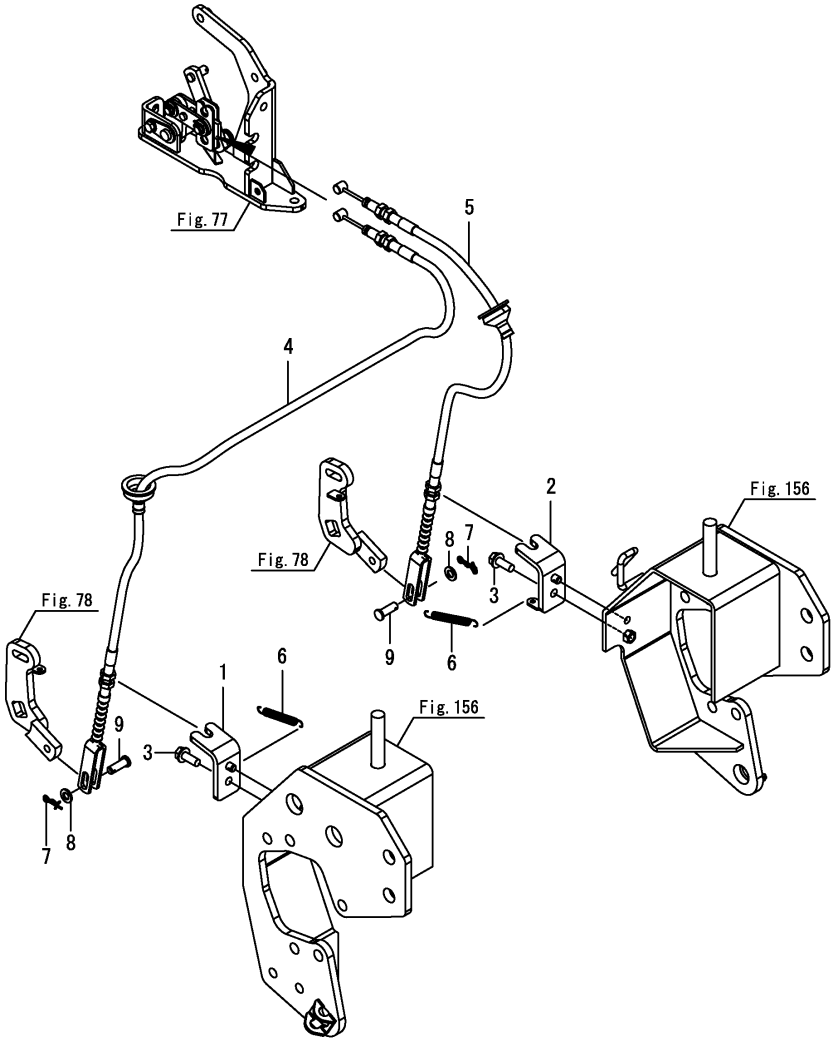

(A)=YT235Y, EU (D)=
(B)= (E)=
(C)= (F)=

No.	Lev.	Parts No.	Description	Q'ty (A)	(B)	(C)	(D)	(E)	(F)	I	R
1	1	1A8406-62630	STAY ASSY, OUTER L	1							
2	1	1A8406-62640	STAY ASSY, OUTER R	1							
3	1	26106-080202	BOLT, M8X 20 PLATED	2							
4	1	1A8406-38750	WIRE, PARKING L	1							
5	1	1A8406-38770	WIRE, PARKING R	1							
6	1	1A8060-39390	SPRING, RETURN	2							
7	1	1C6281-52320	PIN, SNAP 8	2							
8	1	22117-080000	WASHER, 8	2							
9	1	22487-080200	PIN, H 8X 20	2							

N:Old $\overset{\text{Yes}}{\underset{\text{No}}{\leftrightarrows}}$ New, Q:Old $\overset{\text{No}}{\underset{\text{Yes}}{\leftrightarrows}}$ New, R:Old $\overset{\text{Yes}}{\underset{\text{Yes}}{\leftrightarrows}}$ New, S:Old $\overset{\text{No}}{\underset{\text{No}}{\leftrightarrows}}$ New, W:Add, Z:Discontinued, F:Interchangeable by set, K:Q'ty Change

Copyright (C) 2017 YANMAR GLOBAL CS CO., LTD. All RightsReserved.

Fig.80. PEDAL

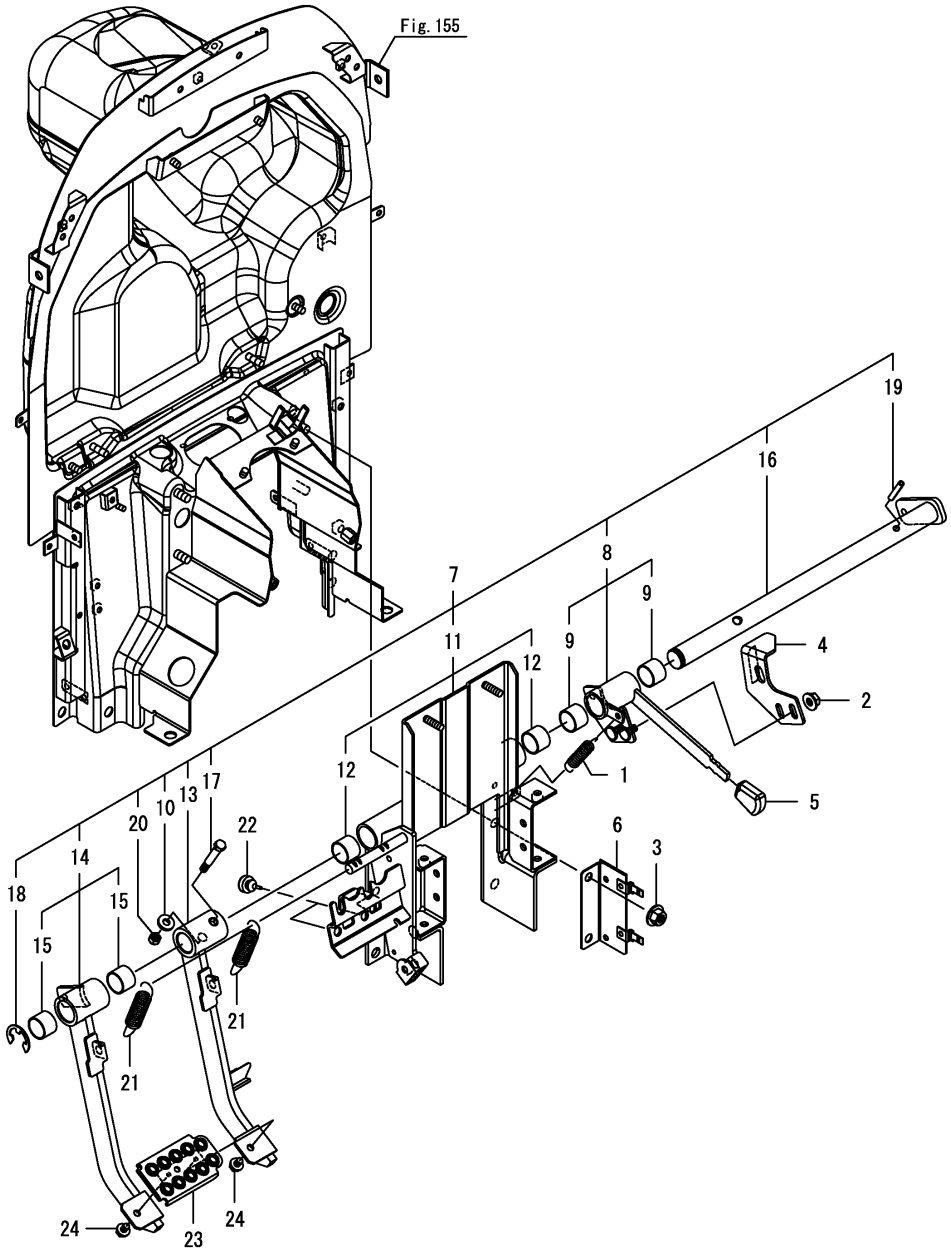

(A)=YT235Y, EU
(B)=
(C)=
(D)=
(E)=
(F)=

No.	Lev.	Parts No.	Description	Q'ty (A)	(B)	(C)	(D)	(E)	(F)	I	R
1	1	1A7790-01160	SPRING, RETURN	1							
2	1	194990-22140	NUT, M8	2							
3	1	194990-22150	NUT, M10	4							
4	1	1A8405-27270	PLATE ASSY, UNLOCK	1							
5	1	1A8400-28520	KNOB,ORANGE	1							
6	1	1A8405-37100	STAY ASSY, FUSE	1							
7	1	1A8406-37200	PEDAL UNIT	1							
8	2	1A8405-27340	ARM ASSY, CRUISE	1							
9	3	24550-025200	BUSH, 25X20	2							
10	2	1C6053-32020	WASHER, 8.5X20X3.2	1							
11	2	1A8405-37192	BRACKET UNIT, PEDAL	1							
12	3	24550-025200	BUSH, 25X20	2							
13	2	1A8405-37310	PEDAL ASSY, BRAKE R	1							
14	2	1A8405-37410	PEDAL ASSY, BRAKE L	1							
15	3	24550-025200	BUSH, 25X20	2							
16	2	1A8405-37550	SHAFT ASSY, BRAKE	1							
17	2	1A7130-37990	BOLT, REAMER M8X55	1							
18	2	22272-000190	RING, E-19	1							
19	2	22351-060036	PIN, SPRING 6.0X36	1							
20	2	26346-080002	NUT, M8	1							
21	1	198290-37510	SPRING, RETURN	2							
22	1	194330-62530	STOPPER, PEDAL	2							
23	1	1A8405-37520	PEDAL ASSY	1							
24	1	26106-060082	BOLT, M6X 8 PLATED	2							

N:Old $\frac{\text{Yes}}{\text{No}}$ New, Q:Old $\frac{\text{No}}{\text{Yes}}$ New, R:Old $\frac{\text{Yes}}{\text{Yes}}$ New, S:Old $\frac{\text{No}}{\text{No}}$ New, W:Add, Z:Discontinued, F:Interchangeable by set, K:Q'ty Change

Copyright (C) 2017 YANMAR GLOBAL CS CO., LTD. All RightsReserved.

Fig.81. BRAKE LINK

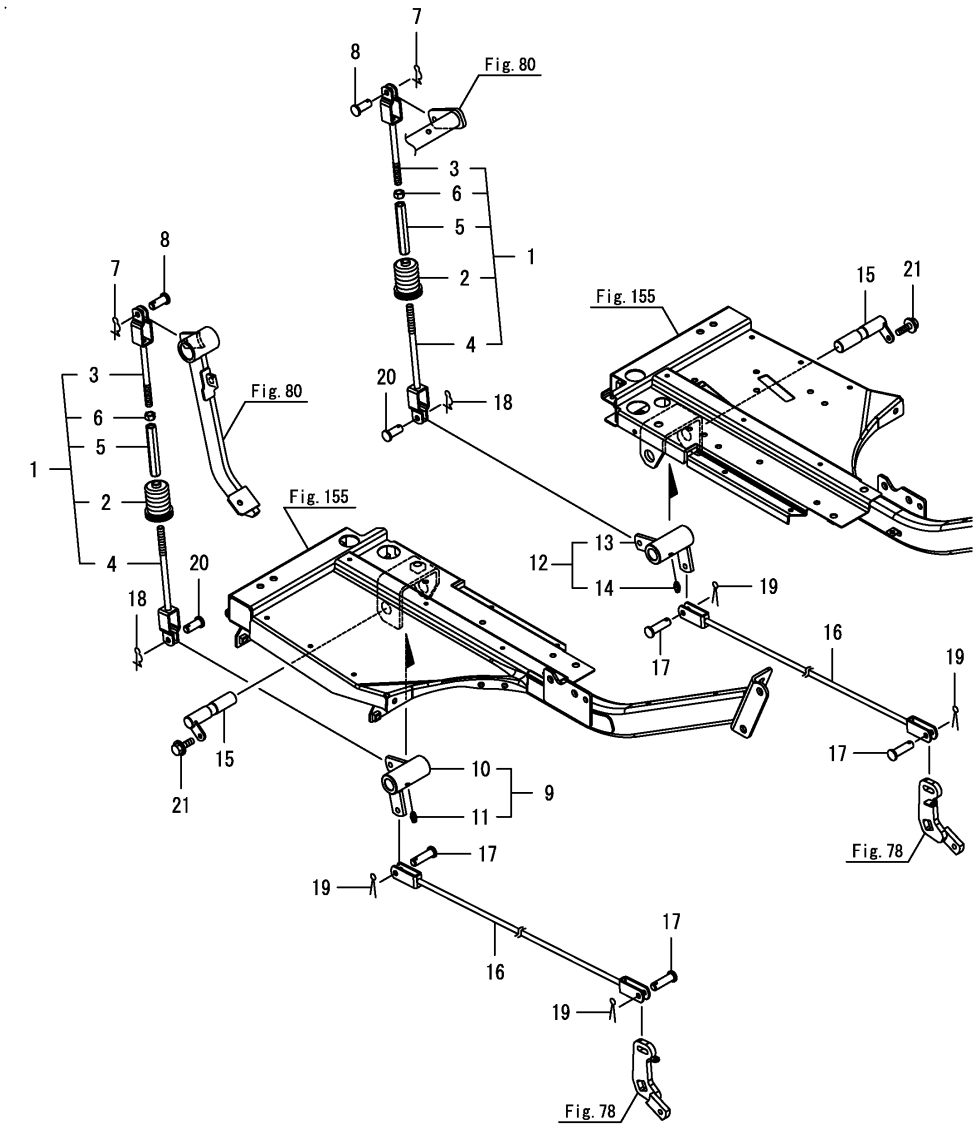

(A)=YT235Y, EU
(B)=
(C)=
(D)=
(E)=
(F)=

No.	Lev.	Parts No.	Description	Q'ty (A)	(B)	(C)	(D)	(E)	(F)	I	R
1	1	1A8400-37901	ROD ASSY, BRAKE F LH	2							
2	2	198448-37450	BOOT, BRAKE ROD	2							
3	2	1A8400-37940	ROD ASSY, BRAKE L	2							
4	2	1A8400-37970	ROD ASSY, BRAKE R	2							
5	2	194151-37730	TURNBUCKLE, M10X90	2							
6	2	194150-22480	NUT, M10 L	2							
7	1	1C6281-52320	PIN, SNAP 8	2							
8	1	22487-080160	PIN, H 8X 16	2							
9	1	1A8400-37730	ARM UNIT, BRAKE L	1							
10	2	1A8400-37750	ARM ASSY, BRAKE L	1							
11	2	24761-010000	NIPPLE, GREASE M6F	1							
12	1	1A8400-37740	ARM UNIT, BRAKE R	1							
13	2	1A8400-37760	ARM ASSY, BRAKE R	1							
14	2	24761-010000	NIPPLE, GREASE M6F	1							
15	1	1A8400-37800	SHAFT ASSY, BRAKE	2							
16	1	1A8400-37850	ROD ASSY, BRAKE R	2							
17	1	198220-37900	PIN, PARALLEL 8X24	4							
18	1	1C6281-52320	PIN, SNAP 8	2							
19	1	22417-250300	PIN, COTTER 2.5X30	4							
20	1	22487-080160	PIN, H 8X 16	2							
21	1	26106-060122	BOLT, M6X 12 PLATED	2							

N:Old $\xleftarrow[\text{No}]{\text{Yes}}$ New, Q:Old $\xleftarrow[\text{Yes}]{\text{No}}$ New, R:Old $\xleftarrow[\text{Yes}]{\text{Yes}}$ New, S:Old $\xleftarrow[\text{No}]{\text{No}}$ New, W:Add, Z:Discontinued, F:Interchangeable by set, K:Q'ty Change

Copyright (C) 2017 YANMAR GLOBAL CS CO., LTD. All RightsReserved.

Fig.82. HYDRAULIC PUMP

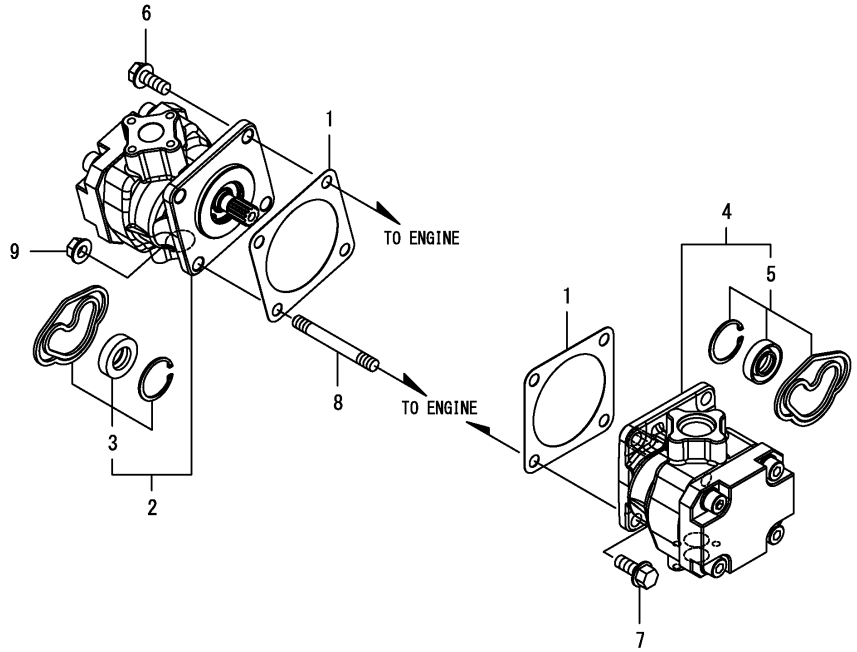

(A)=YT235Y, EU (D)=
(B)= (E)=
(C)= (F)=

No.	Lev.	Parts No.	Description	Q'ty (A)	(B)	(C)	(D)	(E)	(F)	I	R
1	1	124240-01883	GASKET, PUMP	2							
2	1	1A8400-41110	PUMP ASSY, 6	1							
3	2	1A8400-41200	SEAL KIT	1							
4	1	1A8400-41150	PUMP ASSY, 10	1							
5	2	1A8400-41200	SEAL KIT	1							
6	1	26106-080202	BOLT, M8X 20 PLATED	1							
7	1	26106-080202	BOLT, M8X 20 PLATED	4							
8	1	26216-080352	STUD, M8X 35	3							
9	1	26306-080002	NUT, M8	3							

N:Old $\overset{\text{Yes}}{\underset{\text{No}}{\leftrightarrows}}$ New, Q:Old $\overset{\text{No}}{\underset{\text{Yes}}{\leftrightarrows}}$ New, R:Old $\overset{\text{Yes}}{\underset{\text{Yes}}{\leftrightarrows}}$ New, S:Old $\overset{\text{No}}{\underset{\text{No}}{\leftrightarrows}}$ New, W:Add, Z:Discontinued, F:Interchangeable by set, K:Q'ty Change

Copyright (C) 2017 YANMAR GLOBAL CS CO., LTD. All RightsReserved.

Fig.83. HYDRAULIC CYLINDER CASE

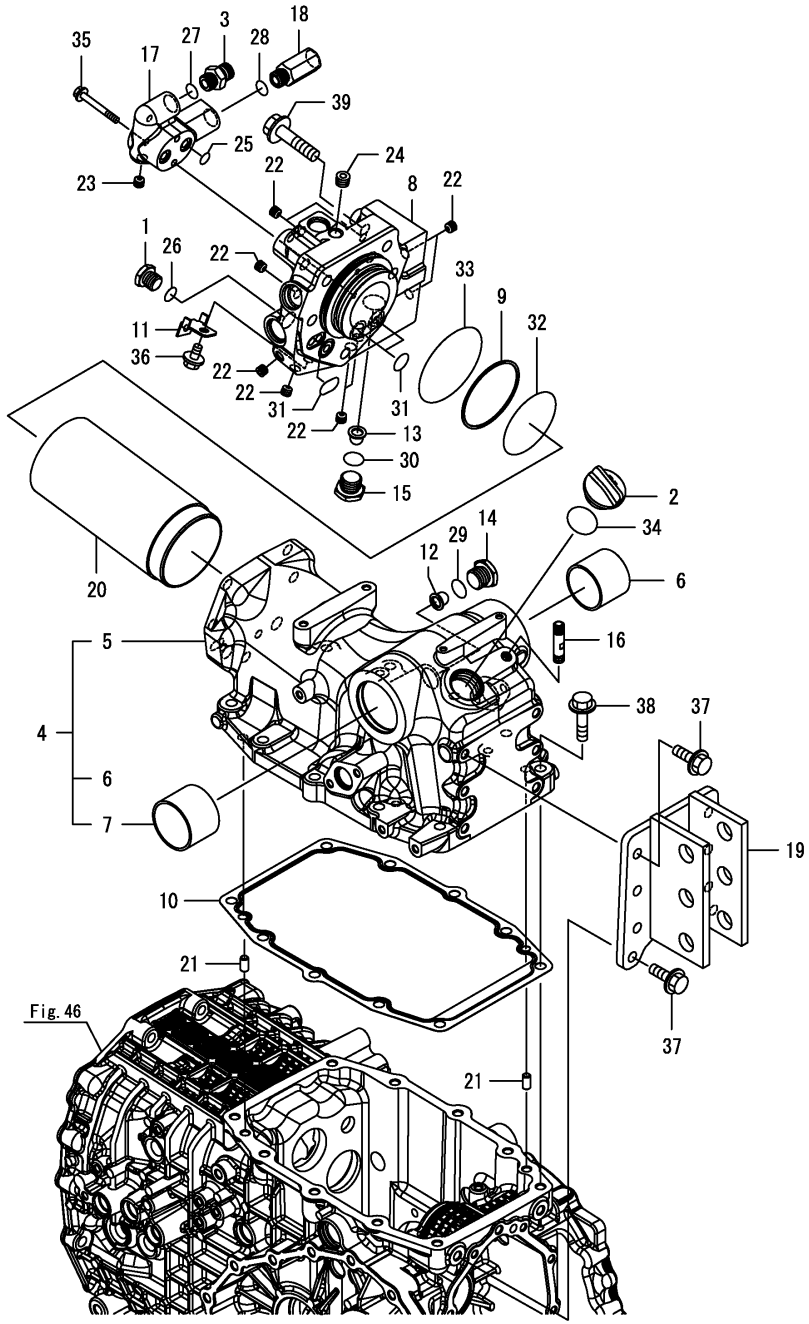

(A)=YT235Y, EU (D)=
(B)= (E)=
(C)= (F)=

No.	Lev.	Parts No.	Description	Q'ty (A)	(B)	(C)	(D)	(E)	(F)	I	R
1	1	192167-24600	PLUG, PF3/8	1							
2	1	1A7870-24910	CAP, OIL	1							
3	1	198266-24980	FITTING, 3/8	1							
4	1	1A8400-42100	CASE ASSY, CYLINDER	1							
5	2	1A8400-42110	CASE, CYLINDER	1							
6	2	24550-045400	BUSH, 45X40	1							
7	2	24550-050400	BUSH, 50X40	1							
8	1	1A8405-42161	HEAD, CYLINDER	1							
9	1	1A8400-42170	RING, BACK UP G80	1							
10	1	1A8310-42180	GASKET,CYLINDER CASE	1							
11	1	1A8405-42200	STAY, HARNESS	1							
12	1	194556-42220	STRAINER, A	1							
13	1	194556-42220	STRAINER, A	1							
14	1	194065-42250	PLUG, PF1/2	1							
15	1	194065-42250	PLUG, PF1/2	1							
16	1	194555-42280	BREATHER, AIR	1							
17	1	1A8405-42301	ADAPTER	1							
18	1	1A8405-42350	CONNECTOR, G3/8-G3/8	1							
19	1	198280-42810-1	HINGE ASSY, TOP LINK	1							
20	1	1A8400-43110	LINER, CYLINDER	1							
21	1	22312-080140	PIN, PARALLEL M8X14	2							
22	1	23871-010000	PLUG, R01	9							
23	1	23871-010000	PLUG, R01	1							
24	1	23871-020000	PLUG, R02	1							
25	1	24315-000110	O-RING, 1BP11.0	2							
26	1	24315-000140	O-RING, 1BP14.0	1							
27	1	24315-000140	O-RING, 1BP14.0	1							
28	1	24315-000140	O-RING, 1BP14.0	1							
29	1	24315-000180	O-RING, 1BP18.0	1							
30	1	24315-000180	O-RING, 1BP18.0	1							
31	1	24315-000180	O-RING, 1BP18.0	4							
32	1	24325-000750	O-RING, 1BG75.0	1							
33	1	24325-000900	O-RING, 1BG90.0	1							
34	1	24351-240300	O-RING, 1A24030	1							
35	1	26106-060502	BOLT, M6X 50 PLATED	2							
36	1	26106-080122	BOLT, M8X 12 PLATED	1							
37	1	26106-100252	BOLT, M10X 25 PLATED	8							
38	1	26106-100402	BOLT, M10X 40 PLATED	10							
39	1	26106-120502	BOLT, M12X 50 PLATED	5							

N:Old $\xleftrightarrow[\text{No}]{\text{Yes}}$ New, Q:Old $\xleftrightarrow[\text{Yes}]{\text{No}}$ New, R:Old $\xleftrightarrow[\text{Yes}]{\text{Yes}}$ New, S:Old $\xleftrightarrow[\text{No}]{\text{No}}$ New, W:Add, Z:Discontinued, F:Interchangeable by set, K:Q'ty Change

Copyright (C) 2017 YANMAR GLOBAL CS CO., LTD. All RightsReserved.

Fig.84. PISTON

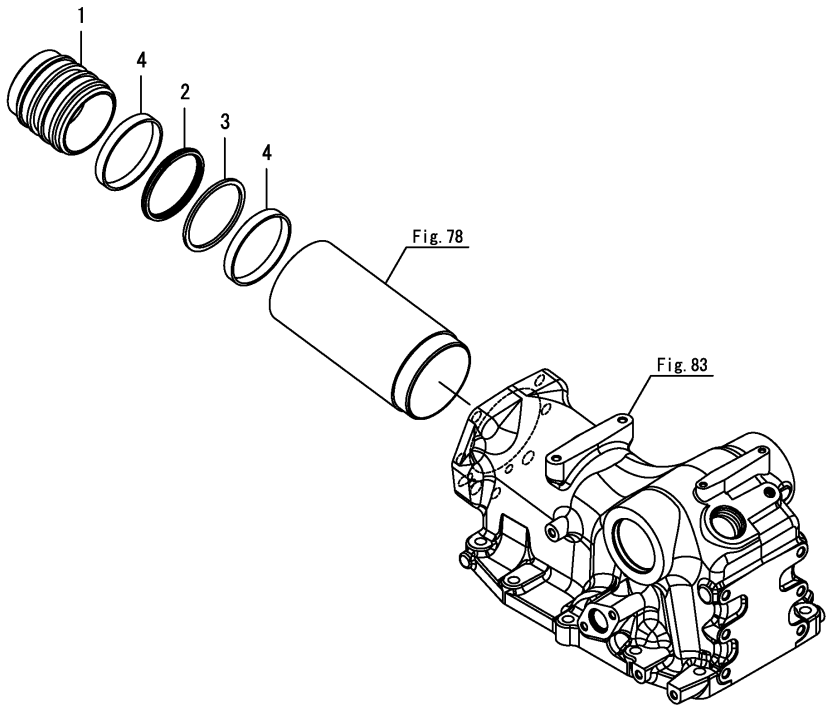

(A)=YT235Y, EU
(B)=
(C)=
(D)=
(E)=
(F)=

No.	Lev.	Parts No.	Description	Q'ty (A)	(B)	(C)	(D)	(E)	(F)	I	R
1	1	1A8400-43310	PISTON, 80	1							
2	1	1A8400-43320	GASKET, 80	1							
3	1	1A8400-43330	RING, BACK UP	1							
4	1	1A8400-43350	WEAR RING, 80	2							

N:Old $\xleftrightarrow[\text{No}]{\text{Yes}}$ New, Q:Old $\xleftrightarrow[\text{Yes}]{\text{No}}$ New, R:Old $\xleftrightarrow[\text{Yes}]{\text{Yes}}$ New, S:Old $\xleftrightarrow[\text{No}]{\text{No}}$ New, W:Add, Z:Discontinued, F:Interchangeable by set, K:Q'ty Change

Copyright (C) 2017 YANMAR GLOBAL CS CO., LTD. All RightsReserved.

Fig.85. LIFT CRANK

(A)=YT235Y, EU
(B)=
(C)=
(D)=
(E)=
(F)=

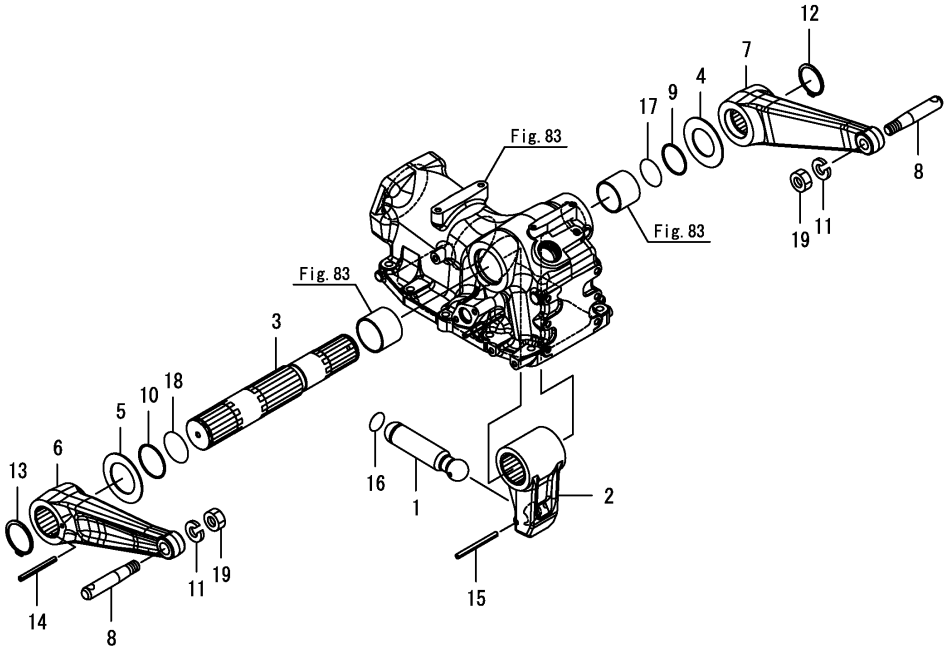

No.	Lev.	Parts No.	Description	Q'ty (A)	(B)	(C)	(D)	(E)	(F)	I	R
1	1	1A8400-43410	ROD, PISTON	1							
2	1	1A8400-44110	CRANK, LIFT	1							
3	1	1A8400-44210	SHAFT, LIFT	1							
4	1	1A8400-44230	WASHER, THRUST	1							
5	1	1A8470-44230	WASHER, THRUST	1							
6	1	1A8400-44410	ARM, LIFT L	1							
7	1	1A8400-44420	ARM, LIFT R	1							
8	1	194130-44480	PIN, LIFT ARM	2							
9	1	1A8400-44480	SPACER	1							
10	1	1A8400-44490	SPACER	1							
11	1	22217-160000	WASHER, SPRING 16	2							
12	1	22242-000450	RING, 45	1							
13	1	22242-000500	RING, 50	1							
14	1	22351-050025	PIN, SPRING 5.0X25	1							
15	1	22351-050063	PIN, SPRING 5.0X63	1							
16	1	24311-000300	O-RING, 1AP30.0	1							
17	1	24311-000440	O-RING, 1AP44.0	1							
18	1	24311-000500	O-RING, 1AP50.0	1							
19	1	26736-160002	NUT, M16	2							

N:Old $\frac{\text{Yes}}{\text{No}}$ New, Q:Old $\frac{\text{No}}{\text{Yes}}$ New, R:Old $\frac{\text{Yes}}{\text{Yes}}$ New, S:Old $\frac{\text{No}}{\text{No}}$ New, W:Add, Z:Discontinued, F:Interchangeable by set, K:Q'ty Change

Copyright (C) 2017 YANMAR GLOBAL CS CO., LTD. All RightsReserved.

Fig.86. CONTROL VALVE

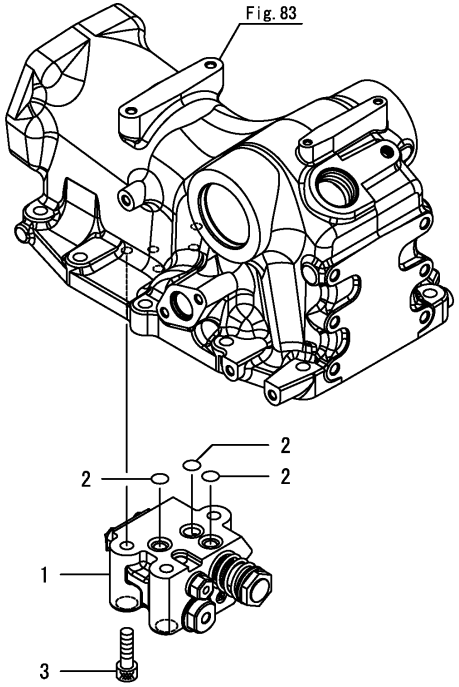

(A)=YT235Y, EU
(B)=
(C)=
(D)=
(E)=
(F)=

No.	Lev.	Parts No.	Description	Q'ty (A)	(B)	(C)	(D)	(E)	(F)	I	R
1	1	168245-00080	VALVE ASSY, CONTROL	1							
2	2	24315-000110	O-RING, 1BP11.0	3							
3	1	26450-080202	BOLT, M8X 20	3							

N:Old $\overset{\text{Yes}}{\underset{\text{No}}{\leftrightarrows}}$ New, Q:Old $\overset{\text{No}}{\underset{\text{Yes}}{\leftrightarrows}}$ New, R:Old $\overset{\text{Yes}}{\underset{\text{Yes}}{\leftrightarrows}}$ New, S:Old $\overset{\text{No}}{\underset{\text{No}}{\leftrightarrows}}$ New, W:Add, Z:Discontinued, F:Interchangeable by set, K:Q'ty Change

Copyright (C) 2017 YANMAR GLOBAL CS CO., LTD. All RightsReserved.

Fig.87. RELIEF VALVE

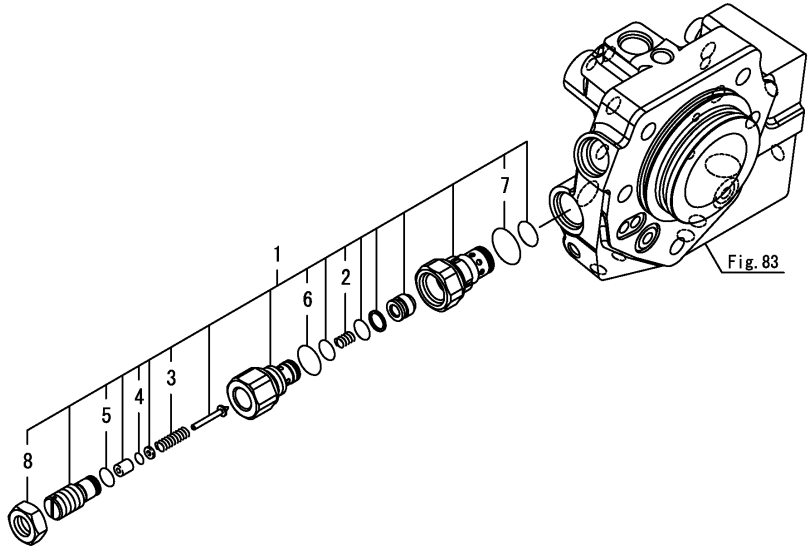

(A)=YT235Y, EU
(B)=
(C)=
(D)=
(E)=
(F)=

No.	Lev.	Parts No.	Description	Q'ty (A)	(B)	(C)	(D)	(E)	(F)	I	R
1	1	1682B3-00040	VALVE ASSY, RELIFE 3	1							
1-1	1	1682B3-00050	VALVE ASSY, RELIEF 2	1						N	
	(A=F200008)										
2	2	1682B3-01130	SPRING, MAIN RELIEF	1							
3	2	1682B3-01310	SPRING, PILOT	1							
4	2	24311-000030	O-RING, 1AP3.0	1							
5	2	24315-000100	O-RING, 1BP10.0	1							
6	2	24315-000180	O-RING, 1BP18.0	1							
7	2	24315-000220	O-RING, 1BP22.0	1							
8	2	26776-160002	NUT, LOCK M16	1							

N:Old $\overset{\text{Yes}}{\underset{\text{No}}{\leftrightarrows}}$ New, Q:Old $\overset{\text{No}}{\underset{\text{Yes}}{\leftrightarrows}}$ New, R:Old $\overset{\text{Yes}}{\underset{\text{Yes}}{\leftrightarrows}}$ New, S:Old $\overset{\text{No}}{\underset{\text{No}}{\leftrightarrows}}$ New, W:Add, Z:Discontinued, F:Interchangeable by set, K:Q'ty Change

Copyright (C) 2017 YANMAR GLOBAL CS CO., LTD. All RightsReserved.

Fig.88. STOP VALVE CONTROL

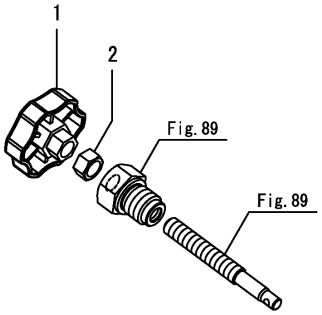

(A)=YT235Y, EU
(B)=
(C)=
(D)=
(E)=
(F)=

No.	Lev.	Parts No.	Description	Q'ty (A)	(B)	(C)	(D)	(E)	(F)	I	R
1	1	1A8160-46670	KNOB, STOP VALVE	1							
2	1	26716-100002	NUT, M10	1							

N:Old $\xleftarrow[\text{No}]{\text{Yes}}$ New, Q:Old $\xleftarrow[\text{Yes}]{\text{No}}$ New, R:Old $\xleftarrow[\text{Yes}]{\text{Yes}}$ New, S:Old $\xleftarrow[\text{No}]{\text{No}}$ New, W:Add, Z:Discontinued, F:Interchangeable by set, K:Q'ty Change

Copyright (C) 2017 YANMAR GLOBAL CS CO., LTD. All RightsReserved.

Fig.89. STOP VALVE

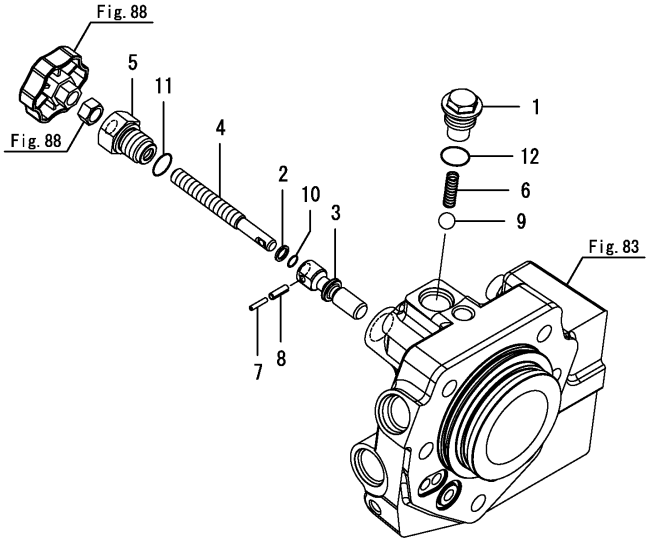

(A)=YT235Y, EU (D)=
(B)= (E)=
(C)= (F)=

No.	Lev.	Parts No.	Description	Q'ty (A)	(B)	(C)	(D)	(E)	(F)	I	R
1	1	1A7640-43450	PLUG, CHECK VALVE	1							
2	1	194065-46220	RING, BACK UP P8	1							
3	1	1A8400-46301	VALVE, STOP	1							
4	1	1A8400-46321	ROD, STOP VALVE	1							
5	1	194065-46350	GUIDE, VALVE	1							
6	1	194555-46380	SPRING, CHECK	1							
7	1	22351-025014	PIN, 2.5A X 14	1							
8	1	22351-040014	PIN, SPRING 4.0X14	1							
9	1	24190-130003	BALL, STEEL 13/32	1							
10	1	24315-000080	O-RING, 1BP8.0	1							
11	1	24315-000160	O-RING, 1BP16.0	1							
12	1	24315-000180	O-RING, 1BP18.0	1							

N:Old $\xleftrightarrow[\text{No}]{\text{Yes}}$ New, Q:Old $\xleftrightarrow[\text{Yes}]{\text{No}}$ New, R:Old $\xleftrightarrow[\text{Yes}]{\text{Yes}}$ New, S:Old $\xleftrightarrow[\text{No}]{\text{No}}$ New, W:Add, Z:Discontinued, F:Interchangeable by set, K:Q'ty Change

Copyright (C) 2017 YANMAR GLOBAL CS CO., LTD. All RightsReserved.

Fig.90. SAFETY VALVE

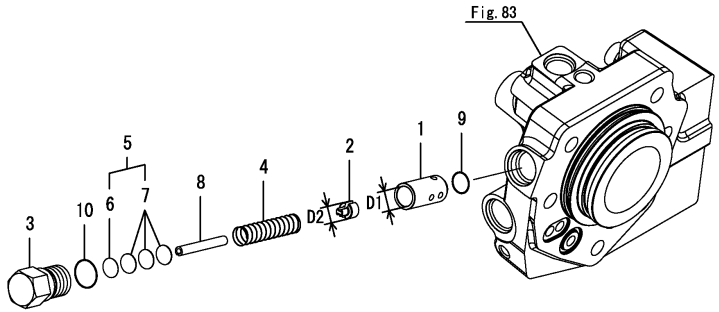

(A)=YT235Y, EU
(B)=
(C)=
(D)=
(E)=
(F)=

No.	Lev.	Parts No.	Description	Q'ty (A)	(B)	(C)	(D)	(E)	(F)	I	R
1	1	1A8060-46410	SEAT, VALVE	1							
1-1	1	1A8060-46411	SEAT, VALVE	1						F	1
	(A=F100241)										
2	1	194640-46420	VALVE, POPPET	1							
2-1	1	1A8060-46420	VALVE, POPPET	1						F	1
	(A=F100241)										
3	1	1A8042-46430	PLUG, VALVE	1							
4	1	1A8060-46440	SPRING, VALVE	1							
5	1	1A8060-46460	SHIM ASSY, RELIEF	1							
6	2	194250-46470	SHIM, T=0.2	1							
7	2	1A8060-46470	SHIM, 0.5	3							
8	1	22351-060050	PIN, SPRING 6.0X50	1							
9	1	24315-000150	O-RING, 1BP15.0	1							
10	1	24315-000200	O-RING, 1BP20.0	1							

Remarks
(1)No.1-1, 2-1 interchangeable by set.
D1=No.1 : 14.5mm, No.1-1 : 15mm.
D2=No.2 : 12mm, No.2-1 : 14.5mm.

N:Old $\xleftarrow[\text{No}]{\text{Yes}}$ New, Q:Old $\xleftarrow[\text{Yes}]{\text{No}}$ New, R:Old $\xleftarrow[\text{Yes}]{\text{Yes}}$ New, S:Old $\xleftarrow[\text{No}]{\text{No}}$ New, W:Add, Z:Discontinued, F:Interchangeable by set, K:Q'ty Change

Copyright (C) 2017 YANMAR GLOBAL CS CO., LTD. All RightsReserved.

Fig.91. LOADER VALVE

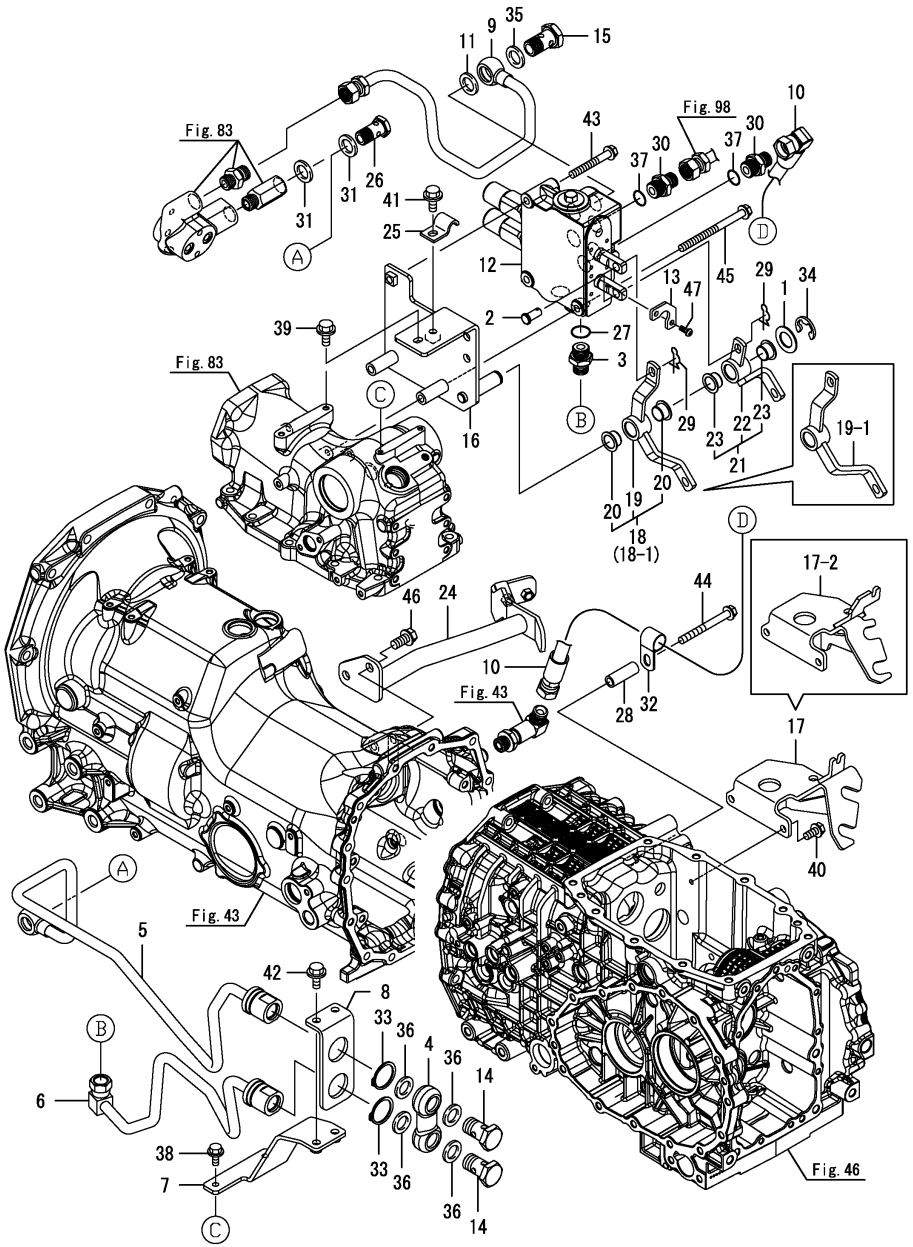

(A)=YT235Y, EU
(B)=
(C)=
(D)=
(E)=
(F)=

No.	Lev.	Parts No.	Description	Q'ty (A)	(B)	(C)	(D)	(E)	(F)	I	R
1	1	194197-25930	WASHER, 17X24X1.6	1							
2	1	194312-27780	PIN, 8.9	2							
3	1	1A6300-32220	CONNECTOR, PF3/8	1							
4	1	1A8405-45150	JOINT, BYPASS	1							
5	1	1A8405-45250	PIPE ASSY, SCV C1	1							
6	1	1A8405-45270	PIPE ASSY, SCV C2	1							
7	1	1A8405-45360	BRACKET ASSY, PORT	1							
8	1	1A8405-45380	STAY, PORT	1							
9	1	1A8405-46321	PIPE ASSY, SCV P	1							
10	1	1A8406-46340	HOSE, SCV T	1							
11	1	1A8405-46450	GASKET, 19X2.3	1							
12	1	1A8330-46600	VALVE ASSY, LOADER	1							
13	1	1A8405-46600	PLATE	1							
14	1	198245-46680	BOLT, M3/4-16	2							
15	1	198245-46680	BOLT, M3/4-16	1							
16	1	1A8405-47301	BRACKET ASSY, LOADER	1							
17	1	1A8405-47354	BRACKET ASSY, CABLE	1							
17-1	1	1A8405-47355	BRACKET ASSY, CABLE	1						N	
	(A=F100052)										
17-2	1	1A8405-47356	BRACKET ASSY, CABLE	1						F	1
	(A=F200001)										
18	1	1A8405-47902	ARM ASSY, WIRE	1							
18-1	1	1A8405-47903	ARM ASSY, WIRE	1						F	1
	(A=F200001)										
19	2	1A8405-47912	ARM ASSY	1							
19-1	2	1A8405-47913	ARM ASSY	1						S	
	(A=F200001)										
20	2	1S6489-63330	BUSH, LFF 1610	2							
21	1	1A8405-47952	ARM ASSY, WIRE	1							
22	2	1A8405-47962	ARM ASSY	1							
23	2	1S6489-63330	BUSH, LFF 1610	2							
24	1	1A8405-48400	STAY ASSY,SCV	1							
25	1	1A8310-48810	CLAMP, PIPE	1							
26	1	198121-48870	JOINT, PF3/8	1							
27	1	194850-49290	PACKING, 6-1	1							
28	1	1E6363-51430	COLLAR, BRACKET B	1							
29	1	1C6281-52320	PIN, SNAP 8	2							
30	1	172175-76100	CONNECTOR,UN3/4PF3/8	5							
31	1	194555-77910	GASKET, 17	2							
32	1	1E6213-83410	CLIP, HARNESS 18	1							
33	1	22242-000300	RING, 30	2							
34	1	22272-000120	RING, E-12	1							
35	1	23414-190000	GASKET, 19X1.0	1							
36	1	23414-190000	GASKET, 19X1.0	4							
37	1	24365-090800	O-RING, 1BAS908	5							
38	1	26106-060122	BOLT, M6X 12 PLATED	2							
39	1	26106-080162	BOLT, M8X 16 PLATED	1							
40	1	26106-080162	BOLT, M8X 16 PLATED	2							
41	1	26106-080162	BOLT, M8X 16 PLATED	1							
42	1	26106-080162	BOLT, M8X 16 PLATED	2							
43	1	26106-080602	BOLT, M8X 60 PLATED	1							

Remarks
(1)No.17-2, 18-1, Fig.92 No.3-1 & 17-1 are interchangeable by set.

N:Old $\xleftarrow[\text{No}]{\text{Yes}}$ New, Q:Old $\xleftarrow[\text{Yes}]{\text{No}}$ New, R:Old $\xleftarrow[\text{Yes}]{\text{Yes}}$ New, S:Old $\xleftarrow[\text{No}]{\text{No}}$ New, W:Add, Z:Discontinued, F:Interchangeable by set, K:Q'ty Change

++ CONTINUE ++

Copyright (C) 2017 YANMAR GLOBAL CS CO., LTD. All RightsReserved.

Fig.91. LOADER VALVE

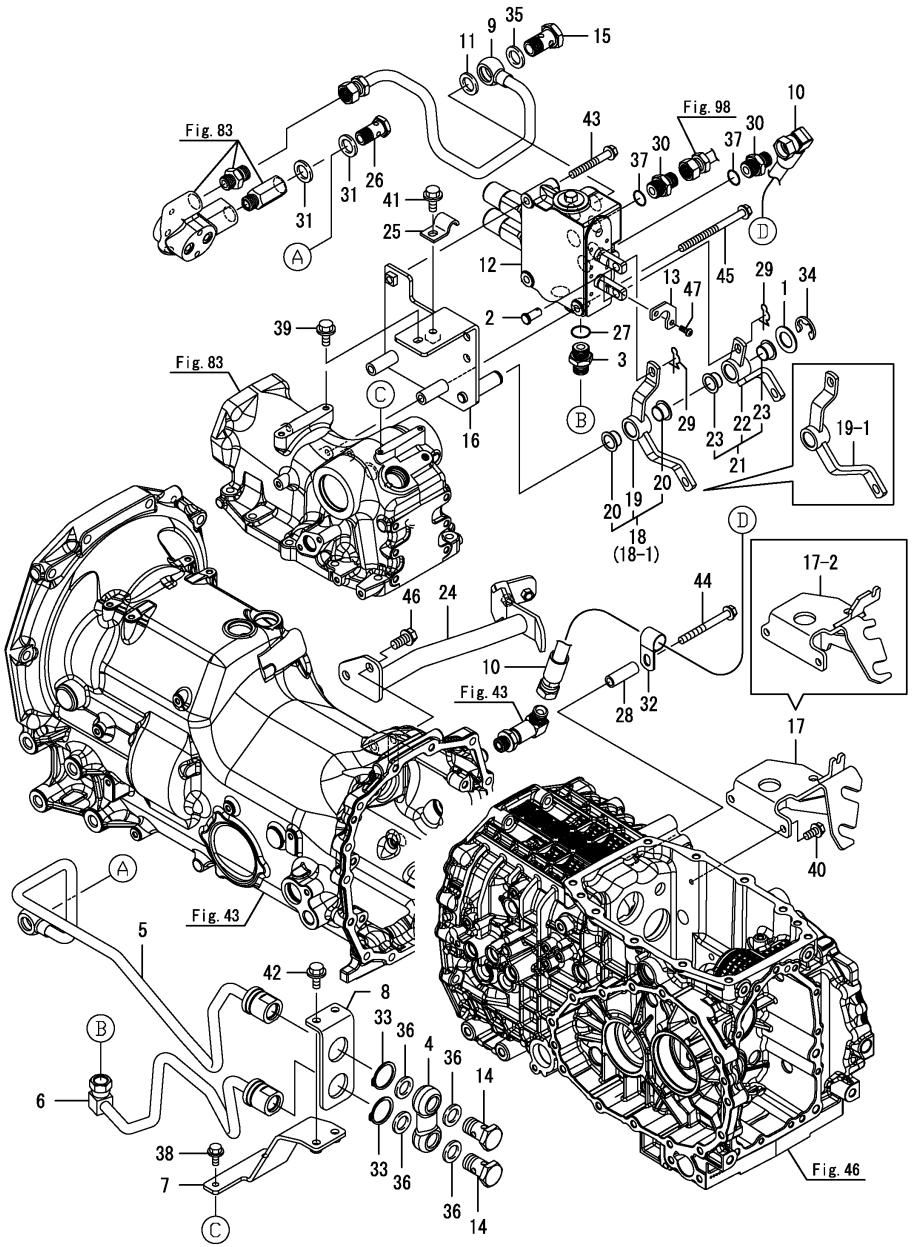

(A)=YT235Y, EU
(B)=
(C)=
(D)=
(E)=
(F)=

No.	Lev.	Parts No.	Description	Q'ty (A)	(B)	(C)	(D)	(E)	(F)	I	R
44	1	26106-080802	BOLT, M8X 80 PLATED	1							
45	1	26106-081002	BOLT, M8X100 PLATED	2							
46	1	26106-100202	BOLT, M10X 20 PLATED	2							
47	1	26557-050122	SCREW, M5X12	2							

Remarks
(1)No.17-2, 18-1, Fig.92 No.3-1 & 17-1 are interchangeable by set.

N:Old $\xleftarrow[\text{No}]{\text{Yes}}$ New, Q:Old $\xleftarrow[\text{Yes}]{\text{No}}$ New, R:Old $\xleftarrow[\text{Yes}]{\text{Yes}}$ New, S:Old $\xleftarrow[\text{No}]{\text{No}}$ New, W:Add, Z:Discontinued, F:Interchangeable by set, K:Q'ty Change

Copyright (C) 2017 YANMAR GLOBAL CS CO., LTD. All RightsReserved.

Fig.92. LOADER LEVER

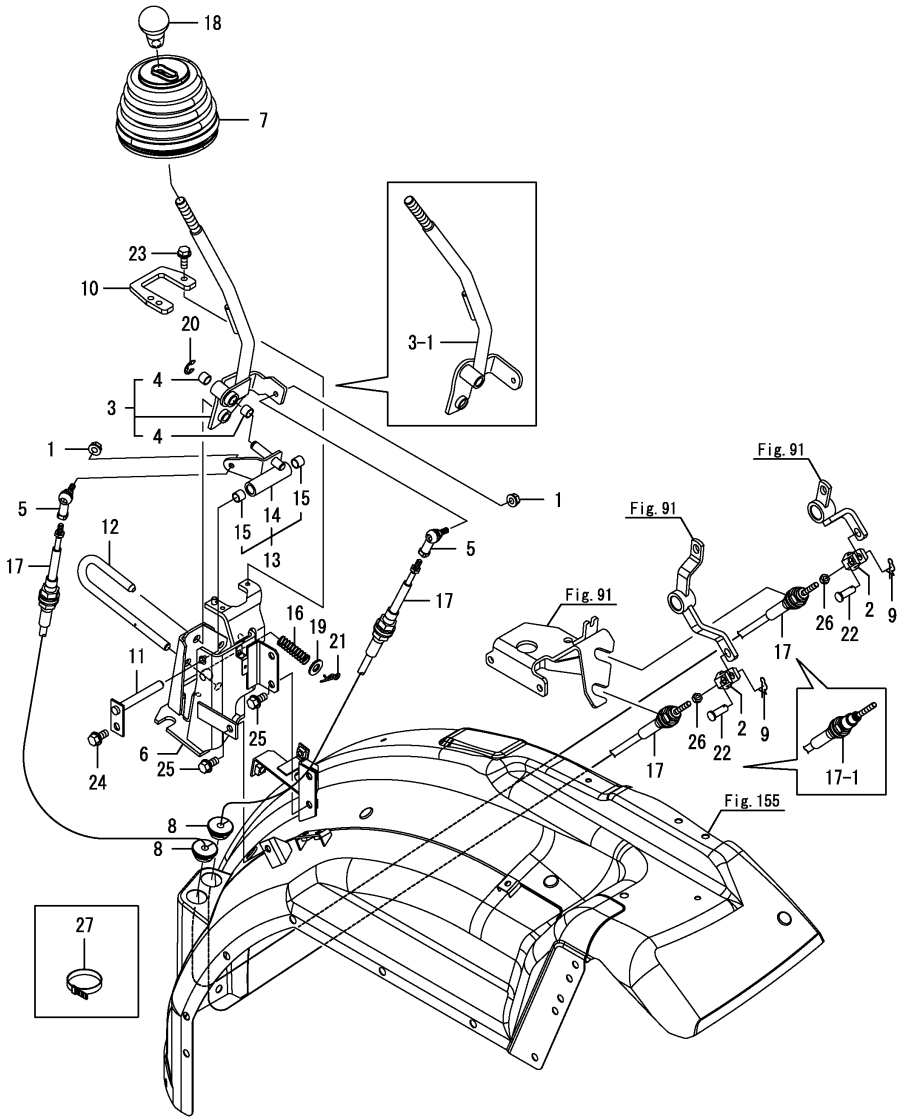

0CNP6-M06360 Fig.92

(A)=YT235Y, EU (D)=
(B)= (E)=
(C)= (F)=

No.	Lev.	Parts No.	Description	Q'ty (A)	(B)	(C)	(D)	(E)	(F)	I	R
1	1	194990-22040	NUT, M6	2							
2	1	1A8405-46100	CONNECTOR,	2							
3	1	1A8405-47605	LEVER UNIT, LOADER	1							
3-1	1 (A=F200001)	1A8405-47606	LEVER UNIT, LOADER	1						N	1
4	2	24550-010100	BUSH, 10X10	2							
5	1	1C6720-47610	BALL, LINK BL6D	2							
6	1	1A8405-47751	STAY ASSY, L-VALVE	1							
7	1	1A7880-47950	BOOT, SCV LEVER	1							
8	1	194275-51210	GROMMET, 25	2							
9	1	1C6281-52320	PIN, SNAP 8	2							
10	1	1A8475-68783	GUIDE, LEVER FRONT	1							
11	1	1A8475-68860	PIN ASSY, 10	1							
12	1	1A8475-68890	PIN, LOCK	1							
13	1	1A8475-68912	LEVER UNIT, LOWER	1							
14	2	1A8475-68922	LEVER ASSY, LOWER	1							
15	2	24550-010100	BUSH, 10X10	2							
16	1	1A8475-68970	SPRING, 12X71	1							
17	1	1A8405-68990	WIRE ASSY, LOADER	2							
17-1	1 (A=F200001)	1A8405-68991	WIRE ASSY, LOADER	1						F	1
18	1	194990-85561	KNOB, HIGH-LOW LEVER	1							
19	1	22137-100000	WASHER, 10	1							
20	1	22272-000080	RING, E- 8	1							
21	1	22372-100000	PIN, SNAP 10	1							
22	1	22487-080200	PIN, H 8X 20	2							
23	1	26106-060162	BOLT, M6X 16 PLATED	2							
24	1	26106-080162	BOLT, M8X 16 PLATED	1							
25	1	26106-080162	BOLT, M8X 16 PLATED	4							
26	1	26716-060002	NUT, M6	2							
27	1	29622-250001	BAND, RF250	1							

Remarks
(1)No.3-1, 17-1, Fig.91 No.17-2 & 18-1 are interchangeable by set.

N:Old $\overset{\text{Yes}}{\underset{\text{No}}{\leftrightarrows}}$ New, Q:Old $\overset{\text{No}}{\underset{\text{Yes}}{\leftrightarrows}}$ New, R:Old $\overset{\text{Yes}}{\underset{\text{Yes}}{\leftrightarrows}}$ New, S:Old $\overset{\text{No}}{\underset{\text{No}}{\leftrightarrows}}$ New, W:Add, Z:Discontinued, F:Interchangeable by set, K:Q'ty Change

Copyright (C) 2017 YANMAR GLOBAL CS CO., LTD. All RightsReserved.

Fig.93. HYDRAULIC CONTROL

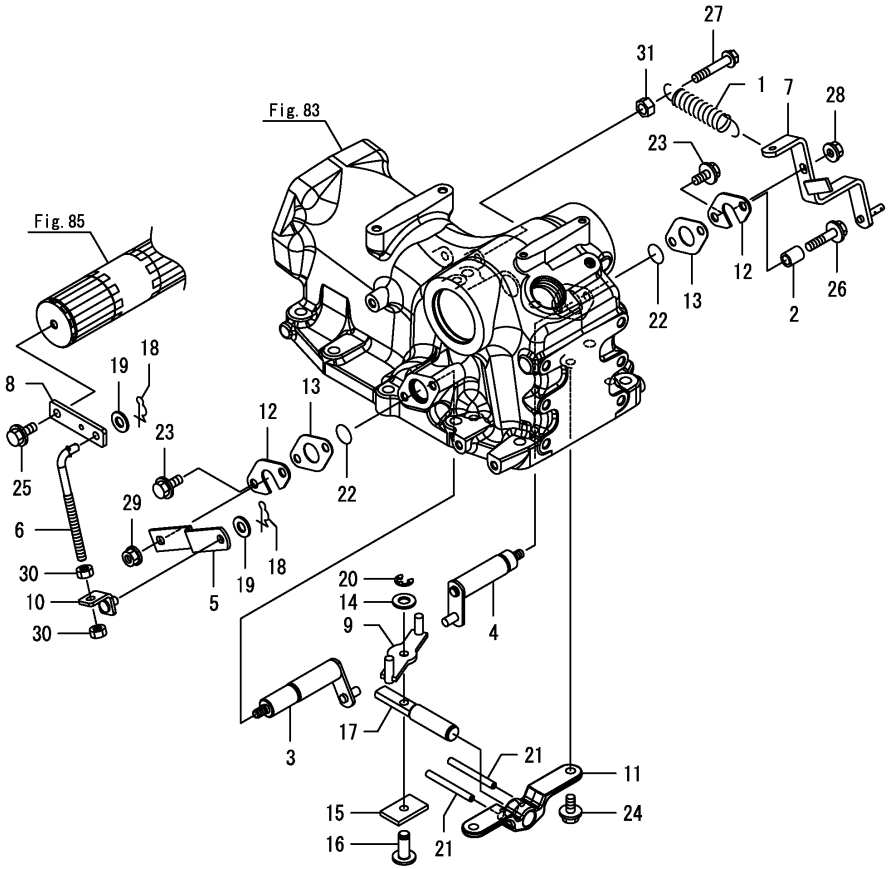

(A)=YT235Y, EU
(B)=
(C)=
(D)=
(E)=
(F)=

No.	Lev.	Parts No.	Description	Q'ty (A)	(B)	(C)	(D)	(E)	(F)	I	R
1	1	195534-22820	SPRING, COVER LOCK	1							
2	1	1E4440-44160	COLLAR	1							
3	1	1A8405-47000	SHAFT ASSY,P FEEDBAC	1							
4	1	1A8405-47030	SHAFT ASSY, P LEVER	1							
5	1	1A8400-47040	ARM, P FEEDBACK	1							
6	1	1A8400-47050	ROD, P FEEDBACK	1							
7	1	1A8405-47052	ARM ASSY,P LEVER	1							
8	1	1A8400-47060	PLATE	1							
9	1	1A8472-47060	PLATE, P CONTROL	1							
10	1	1A8400-47070	ADJUSTER ASSY	1							
11	1	1A8400-47330	PLATE, CONTROL	1							
12	1	194555-47340	PLATE, A	2							
13	1	194555-47350	PLATE, B	2							
14	1	198431-47350	WASHER, 8.4X17X1.6	1							
15	1	198280-47430	PLATE	1							
16	1	1A8400-47460	PIN, CONTROL	1							
17	1	1A8400-47950	ROD, CONTROL	1							
18	1	1C6281-52320	PIN, SNAP 8	2							
19	1	22137-080000	WASHER, 8	2							
20	1	22272-000060	RING, E- 6	1							
21	1	22351-060060	PIN, SPRING 6.0X60	2							
22	1	24311-000200	O-RING, 1AP20.0	2							
23	1	26106-080162	BOLT, M8X 16 PLATED	3							
24	1	26106-080162	BOLT, M8X 16 PLATED	2							
25	1	26106-080162	BOLT, M8X 16 PLATED	1							
26	1	26106-080352	BOLT, M8X 35 PLATED	1							
27	1	26106-080352	BOLT, M8X 35 PLATED	1							
28	1	26366-080002	NUT, M8	1							
29	1	26366-080002	NUT, M8	1							
30	1	26716-080002	NUT, M8	2							
31	1	26716-080002	NUT, M8	1							

N:Old $\frac{\text{Yes}}{\text{No}}$ New, Q:Old $\frac{\text{No}}{\text{Yes}}$ New, R:Old $\frac{\text{Yes}}{\text{Yes}}$ New, S:Old $\frac{\text{No}}{\text{No}}$ New, W:Add, Z:Discontinued, F:Interchangeable by set, K:Q'ty Change

Copyright (C) 2017 YANMAR GLOBAL CS CO., LTD. All RightsReserved.

Fig.94. HYDRAULIC CONTROL LEVER

(A)=YT235Y, EU
(B)=
(C)=
(D)=
(E)=
(F)=

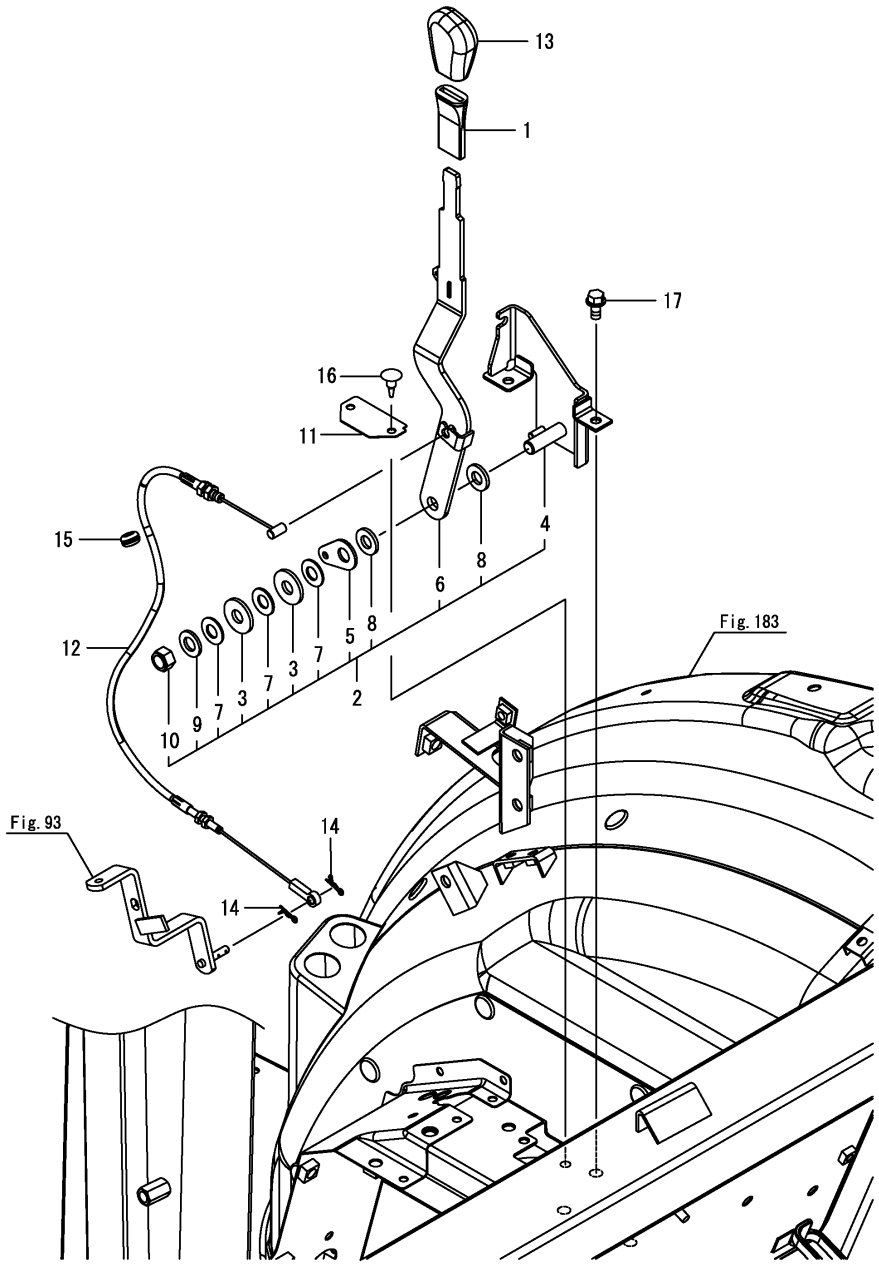

No.	Lev.	Parts No.	Description	Q'ty (A)	(B)	(C)	(D)	(E)	(F)	I	R
1	1	198072-27880	BOOT, SHAFT	1							
2	1	1A8406-47301	LEVER UNIT, POSITION	1							
3	2	1A8400-47250	WASHER,12	2							
4	2	1A8406-47310	LEVER ASSY, POSITION	1							
5	2	1A8406-47380	PLATE, KEEP	1							
6	2	1A8406-47411	LEVER ASSY, POSITION	1							
7	2	194151-47760	WASHER, SPRING 12	3							
8	2	194310-47790	PLATE, FRICTION	2							
9	2	22137-120000	WASHER, 12	1							
10	2	26356-120002	NUT, M12	1							
11	1	1A8406-47370	SEAL,POSITION LEVER	1							
12	1	1A8406-47490	CABLE ASSY, P-LEVER	1							
13	1	198200-47810	KNOB, BLACK	1							
14	1	1C6281-52310	PIN, SNAP 6	2							
15	1	198071-58810	GROMMET, 8	1							
16	1	194697-62560	CLIP, HOLE CAP	2							
17	1	26106-080162	BOLT, M8X 16 PLATED	2							

N:Old $\frac{\text{Yes}}{\text{No}}$ New, Q:Old $\frac{\text{No}}{\text{Yes}}$ New, R:Old $\frac{\text{Yes}}{\text{Yes}}$ New, S:Old $\frac{\text{No}}{\text{No}}$ New, W:Add, Z:Discontinued, F:Interchangeable by set, K:Q'ty Change

Copyright (C) 2017 YANMAR GLOBAL CS CO., LTD. All RightsReserved.

Fig.95. HYDRAULIC PIPING

(A)=YT235Y, EU
(B)=
(C)=
(D)=
(E)=
(F)=

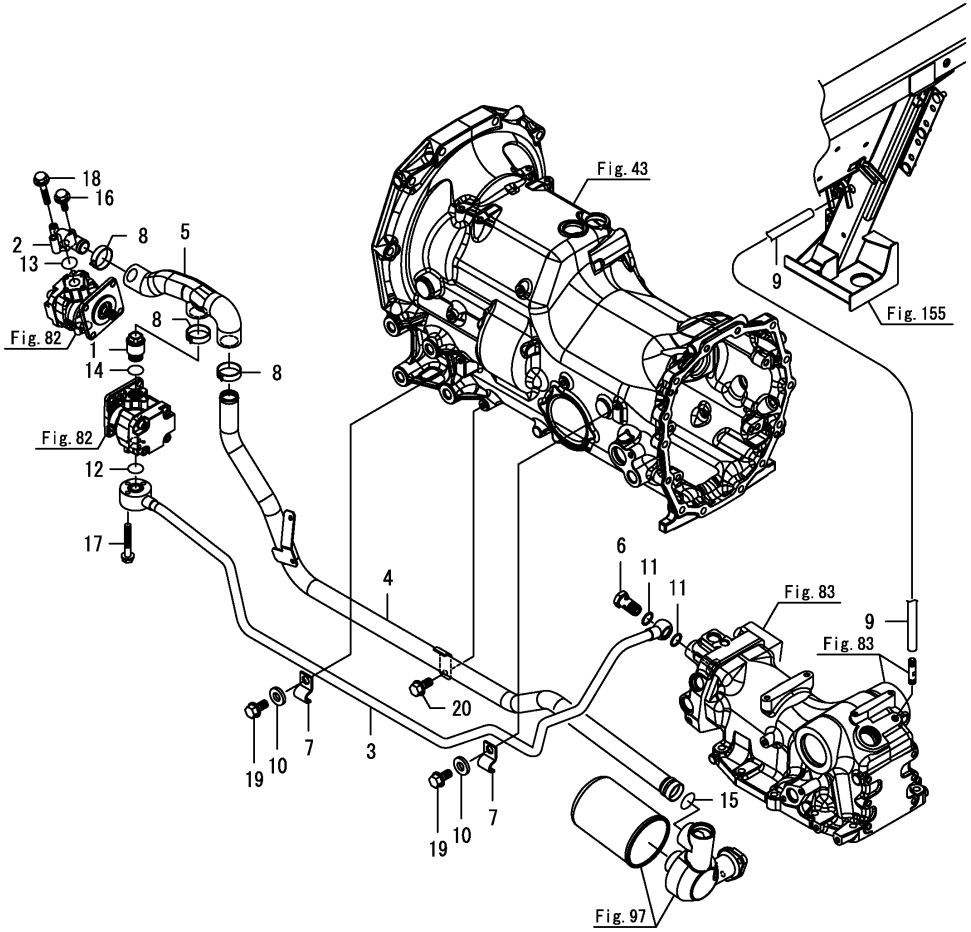

No.	Lev.	Parts No.	Description	Q'ty (A)	(B)	(C)	(D)	(E)	(F)	I	R
1	1	198010-41211	JOINT, M22	1							
2	1	198220-48140	FLANGE, PIPE P	1							
3	1	1A8420-48211	PIPE ASSY, PUMP	1							
4	1	1A8420-48301	PIPE ASSY, LOW-P	1							
5	1	1A8400-48341	HOSE, SUCTION	1							
6	1	198220-48750	BOLT ASSY, JOINT	1							
7	1	1A8400-48810	CLAMP	2							
8	1	175022-49730	CLIP, HOSE 31.0	3							
9	1	198121-63560	PIPE, AIR BREATHER	1							
10	1	22157-080000	WASHER, 8	2							
11	1	23414-180023	GASKET, 18X1.0	2							
12	1	24311-000200	O-RING, 1AP20.0	1							
13	1	24311-000200	O-RING, 1AP20.0	1							
14	1	24311-000200	O-RING, 1AP20.0	1							
15	1	24311-000260	O-RING, 1AP26.0	1							
16	1	26106-060202	BOLT, M6X 20 PLATED	1							
17	1	26106-060402	BOLT, M6X 40 PLATED	3							
18	1	26106-060402	BOLT, M6X 40 PLATED	2							
19	1	26106-080162	BOLT, M8X 16 PLATED	2							
20	1	26106-080162	BOLT, M8X 16 PLATED	1							

N:Old $\xleftarrow[\text{No}]{\text{Yes}}$ New, Q:Old $\xleftarrow[\text{Yes}]{\text{No}}$ New, R:Old $\xleftarrow[\text{Yes}]{\text{Yes}}$ New, S:Old $\xleftarrow[\text{No}]{\text{No}}$ New, W:Add, Z:Discontinued, F:Interchangeable by set, K:Q'ty Change

Copyright (C) 2017 YANMAR GLOBAL CS CO., LTD. All RightsReserved.

Fig.96. HYDRAULIC PIPING(TRANSMISSION)

(A)=YT235Y, EU
(B)=
(C)=
(D)=
(E)=
(F)=

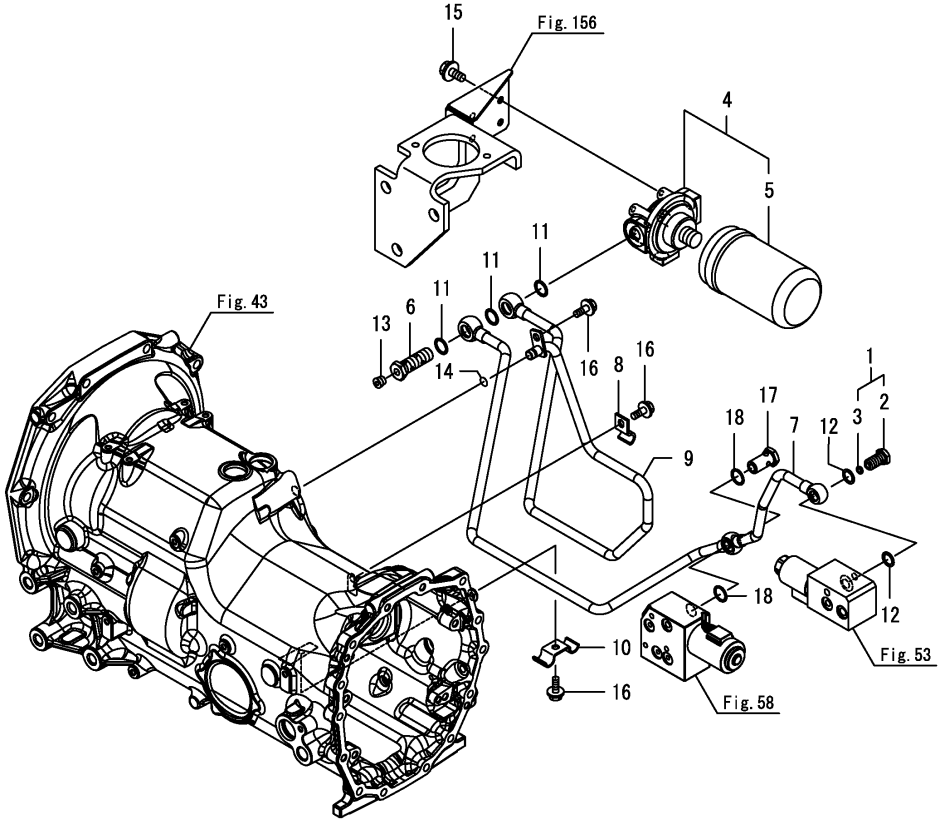

No.	Lev.	Parts No.	Description	Q'ty (A)	(B)	(C)	(D)	(E)	(F)	I	R
1	1	1A8091-29900	BOLT ASSY, JOINT	1							
2	2	1A8091-29910	BOLT, PIPE JOINT 8	1							
3	2	168HQ0-87730	FILTER, COIN	1							
4	1	1A7180-48191	FILTER ASSY, LINE 10	1							
5	2	1A7180-48210	CARTRIDGE ASSY	1							
6	1	1A8405-48681	BOLT,JOINT G3/8	1							
7	1	1A8406-48750	PIPE ASSY	1							
8	1	1A8310-48810	CLAMP, PIPE	1							
9	1	1A8401-48850	PIPE ASSY,HST CHARGE	1							
10	1	1A8405-48900	CLAMP	1							
11	1	194555-77910	GASKET, 17	3							
12	1	23414-140000	GASKET, 14X1.0	2							
13	1	23871-010000	PLUG, R01	1							
14	1	24341-000100	O-RING, 1AS10.0	1							
15	1	26106-080162	BOLT, M8X 16 PLATED	4							
16	1	26106-080162	BOLT, M8X 16 PLATED	3							
17	1	198121-48870	JOINT, PF3/8	1							
18	1	194555-77910	GASKET, 17	2							

N:Old $\frac{\text{Yes}}{\text{No}}$ New, Q:Old $\frac{\text{No}}{\text{Yes}}$ New, R:Old $\frac{\text{Yes}}{\text{Yes}}$ New, S:Old $\frac{\text{No}}{\text{No}}$ New, W:Add, Z:Discontinued, F:Interchangeable by set, K:Q'ty Change

Copyright (C) 2017 YANMAR GLOBAL CS CO., LTD. All RightsReserved.

Fig.97. HYDRAULIC FILTER

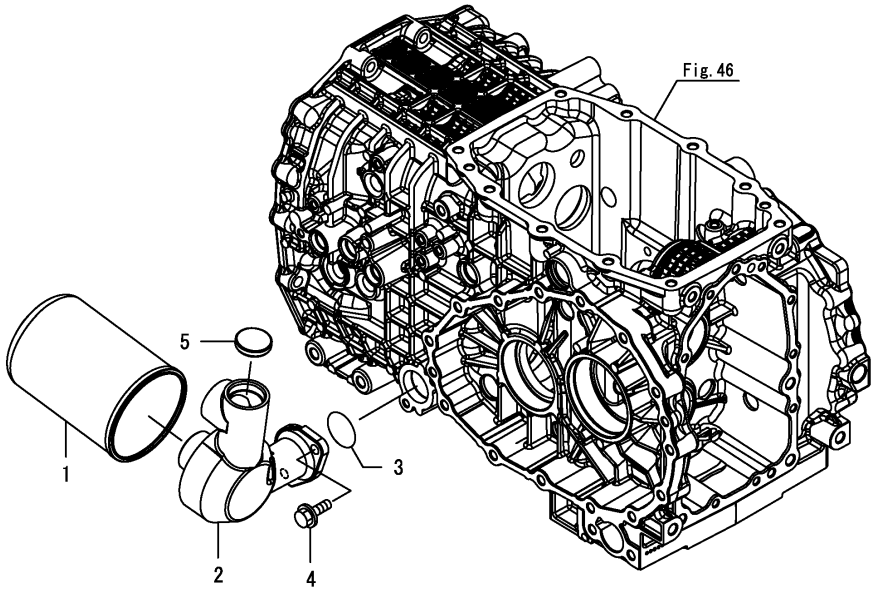

(A)=YT235Y, EU
(B)=
(C)=
(D)=
(E)=
(F)=

No.	Lev.	Parts No.	Description	Q'ty (A)	(B)	(C)	(D)	(E)	(F)	I	R
1	1	198119-48310	FILTER	1							
2	1	198200-48350	COVER, FILTER	1							
3	1	24311-000340	O-RING, 1AP34.0	1							
4	1	26106-080252	BOLT, M8X 25 PLATED	2							
5	1	27260-320000	PLUG, 32	1							

N:Old $\frac{\text{Yes}}{\text{No}}$ New, Q:Old $\frac{\text{No}}{\text{Yes}}$ New, R:Old $\frac{\text{Yes}}{\text{Yes}}$ New, S:Old $\frac{\text{No}}{\text{No}}$ New, W:Add, Z:Discontinued, F:Interchangeable by set, K:Q'ty Change

Copyright (C) 2017 YANMAR GLOBAL CS CO., LTD. All RightsReserved.

Fig.98. HYDRAULIC PIPING(LOADER)

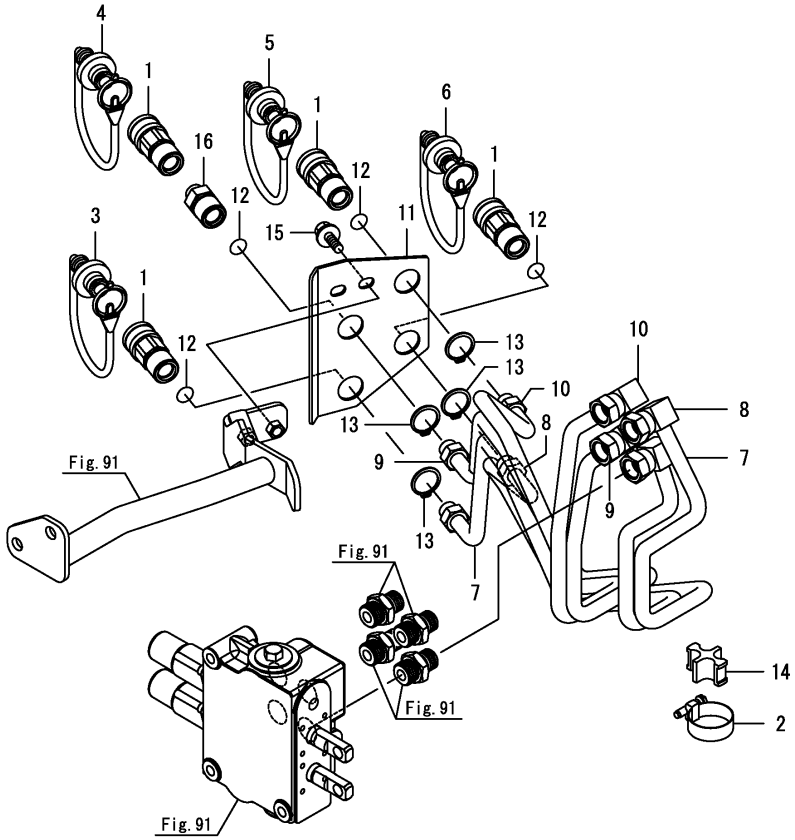

(A)=YT235Y, EU (D)=
(B)= (E)=
(C)= (F)=

No.	Lev.	Parts No.	Description	Q'ty (A)	(B)	(C)	(D)	(E)	(F)	I	R
1	1	198223-46250	COUPLER, QUICK	4							
2	1	198220-46500	CLAMP	1							
3	1	1A7880-47550	PLUG, DUST RED	1							
4	1	1A7880-47560	PLUG, DUST BLUE	1							
5	1	1A7880-47570	PLUG, DUST YELLOW	1							
6	1	1A7880-47580	PLUG, DUST GREEN	1							
7	1	1A8406-48100	PIPE ASSY, HP SCV B2	1							
8	1	1A8406-48150	PIPE ASSY, HP SCV B1	1							
9	1	1A8406-48200	PIPE ASSY, HP SCV A2	1							
10	1	1A8406-48250	PIPE ASSY, HP SCV A1	1							
11	1	1A8405-48360	STAY, SCV	1							
12	1	194850-49290	PACKING, 6-1	4							
13	1	22242-000220	RING, 22	4							
14	1	23000-035000	CLAMP, 35	1							
15	1	26106-080162	BOLT, M8X 16 PLATED	2							
16	1	1A8405-49050	ORIFICE ASSY	1							

N:Old $\overset{\text{Yes}}{\underset{\text{No}}{\leftrightarrows}}$ New, Q:Old $\overset{\text{No}}{\underset{\text{Yes}}{\leftrightarrows}}$ New, R:Old $\overset{\text{Yes}}{\underset{\text{Yes}}{\leftrightarrows}}$ New, S:Old $\overset{\text{No}}{\underset{\text{No}}{\leftrightarrows}}$ New, W:Add, Z:Discontinued, F:Interchangeable by set, K:Q'ty Change

Copyright (C) 2017 YANMAR GLOBAL CS CO., LTD. All RightsReserved.

Fig.99. OIL COOLER

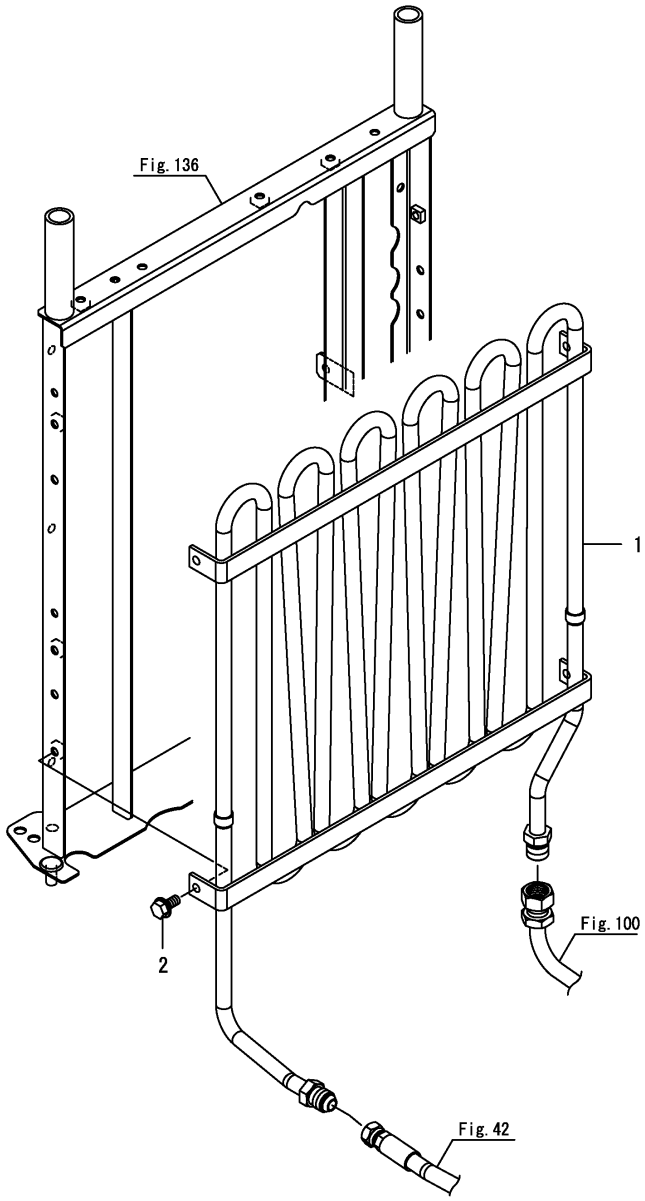

(A)=YT235Y, EU
(B)=
(C)=
(D)=
(E)=
(F)=

No.	Lev.	Parts No.	Description	Q'ty (A)	(B)	(C)	(D)	(E)	(F)	I	R
1	1	1A8420-49101	COOLER ASSY, OIL	1							
2	1	26106-060122	BOLT, M6X 12 PLATED	4							

N:Old $\frac{\text{Yes}}{\text{No}}$ New, Q:Old $\frac{\text{No}}{\text{Yes}}$ New, R:Old $\frac{\text{Yes}}{\text{Yes}}$ New, S:Old $\frac{\text{No}}{\text{No}}$ New, W:Add, Z:Discontinued, F:Interchangeable by set, K:Q'ty Change

Copyright (C) 2017 YANMAR GLOBAL CS CO., LTD. All RightsReserved.

Fig.100. HYDRAULIC PIPING(H.S.T.)

(A)=YT235Y, EU
(B)=
(C)=
(D)=
(E)=
(F)=

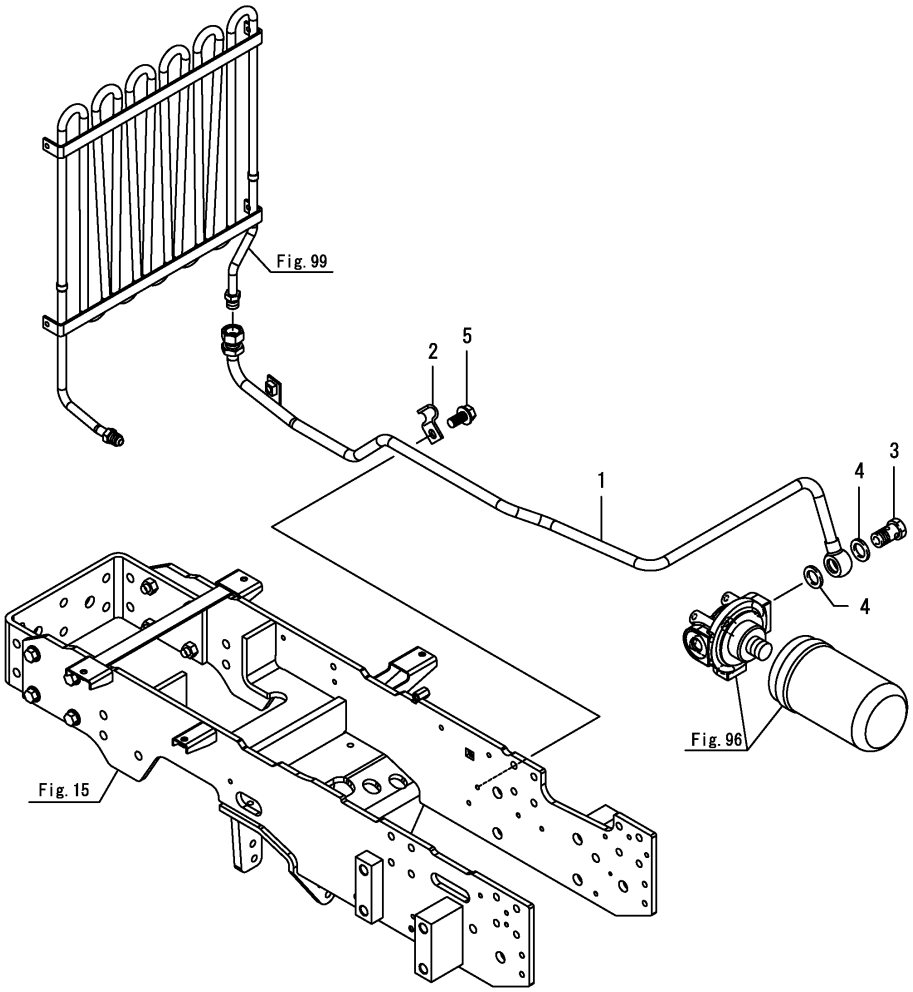

No.	Lev.	Parts No.	Description	Q'ty (A)	(B)	(C)	(D)	(E)	(F)	I	R
1	1	1A8405-48650	PIPE ASSY, FILTER	1							
2	1	1A8310-48810	CLAMP, PIPE	1							
3	1	198121-48870	JOINT, PF3/8	1							
4	1	194555-77910	GASKET, 17	2							
5	1	26106-080162	BOLT, M8X 16 PLATED	1							

N:Old $\xleftrightarrow[\text{No}]{\text{Yes}}$ New, Q:Old $\xleftrightarrow[\text{Yes}]{\text{No}}$ New, R:Old $\xleftrightarrow[\text{Yes}]{\text{Yes}}$ New, S:Old $\xleftrightarrow[\text{No}]{\text{No}}$ New, W:Add, Z:Discontinued, F:Interchangeable by set, K:Q'ty Change

Copyright (C) 2017 YANMAR GLOBAL CS CO., LTD. All RightsReserved.

Fig.101. WIRE HARNESS(ENGINE)

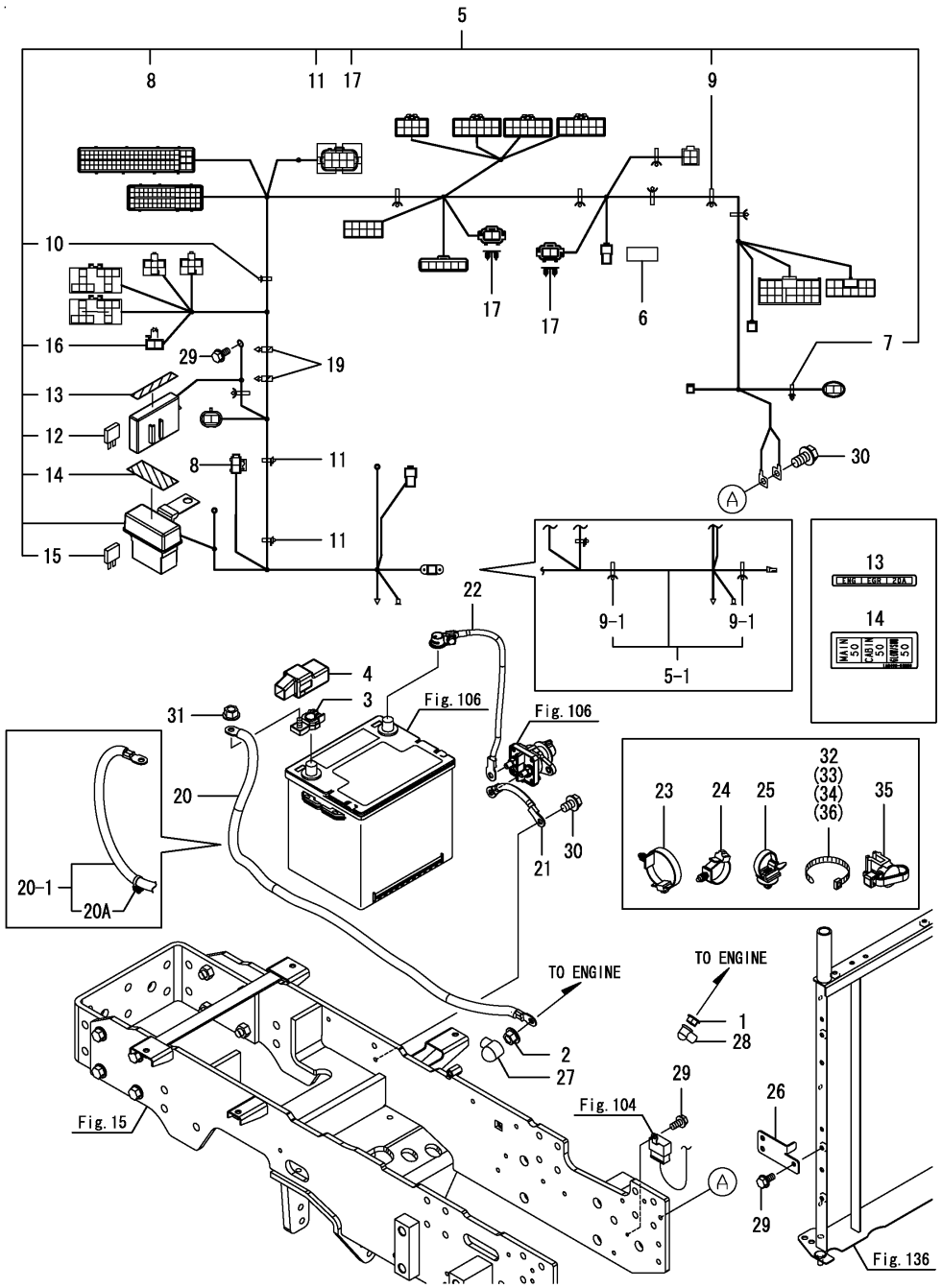

(A)=YT235Y, EU (D)=
(B)= (E)=
(C)= (F)=

No.	Lev.	Parts No.	Description	Q'ty (A)	(B)	(C)	(D)	(E)	(F)	I	R
1	1	194990-22130	NUT, M6	1							
2	1	194990-22140	NUT, M8	1							
3	1	1A8400-51050	TERMINAL, BATTERY +	1							
4	1	1A8400-51060	COVER, TERMINAL	1							
5	1	1A8426-51100	HARNESS ASSY, ENGINE	1							
5-1	1	1A8426-51101	HARNESS ASSY, ENGINE	1						N	
	(A=*2018.06)										
6	2	1A6382-51510	RESISTANCE, 2W R120	1							
7	2	1A8275-51670	CLIP, M8 HOLE	1							
8	2	198153-51700	FUSE, SLOW BLOW 80A	1							
9	2	1A8400-51810	CLAMP, HARNESS	7							
9-1	2	1A8400-51800	CLAMP, HARNESS	9						N	
	(A=*2018.06)										
10	2	1A8400-51830	CLAMP, HARNESS	1							
11	2	1A8400-51840	CLAMP, HARNESS	2							
12	2	198535-52140	FUSE, 20A	3							
13	2	1A8405-65900	LABEL,FUSE ENG	1							
14	2	1A8405-65851	LABEL,SBF	1							
15	2	1E8720-83120	FUSE, SLOW BLOW 50	2							
16	2	1E8235-84910	DIODE, 090 31	1							
17	2	129A00-91430	CLIP, CONNECTOR	2							
19	2	194680-51670	BAND, CLIP	2							
20	1	1A8400-51400	CABLE, + BATTERY	1							
20-1	1	1A8400-51401	CABLE, + BATTERY	1						N	
	(A=*2018.06)										
20A	2	1E9265-84300	CLIP, BAND	4						W	
	(A=*2018.06)										
21	1	1A8426-51400	CABLE, - BATTERY	1							
22	1	194250-51420	CABLE, BATTERY EARTH	1							
23	1	194680-51670	BAND, CLIP	1							
24	1	1A8275-51670	CLIP, M8 HOLE	2							
25	1	1A8400-51810	CLAMP, HARNESS	6							
25-1	1	1E9265-84300	CLIP, BAND	6						N	
	(A=*2018.04)										
25-2	1	1E9265-84300	CLIP, BAND	2						K	
	(A=*2018.06)										
26	1	1A8420-58610	STAY, PLATE	1							
27	1	124550-77030	COVER, TERMINAL B	1							
28	1	124756-77040	COVER, TERMINAL A	1							
29	1	26106-060122	BOLT, M6X 12 PLATED	3							
30	1	26106-080122	BOLT, M8X 12 PLATED	2							
31	1	26367-080002	NUT, M8	1							
32	1	29622-140001	BAND, RF140	1							
33	1	29622-140001	BAND, RF140	2							
34	1	29622-140001	BAND, RF140	1							
35	1	1A8420-51810	CLIP, EDGE	1						W	
	(A=*2018.06)										
36	1	29622-250001	BAND, RF250	1						W	
	(A=*2018.06)										

N:Old $\xleftarrow[\text{No}]{\text{Yes}}$ New, Q:Old $\xleftarrow[\text{Yes}]{\text{No}}$ New, R:Old $\xleftarrow[\text{Yes}]{\text{Yes}}$ New, S:Old $\xleftarrow[\text{No}]{\text{No}}$ New, W:Add, Z:Discontinued, F:Interchangeable by set, K:Q'ty Change

Copyright (C) 2017 YANMAR GLOBAL CS CO., LTD. All RightsReserved.

Fig.102. WIRE HARNESS(ENGINE)(CABIN)

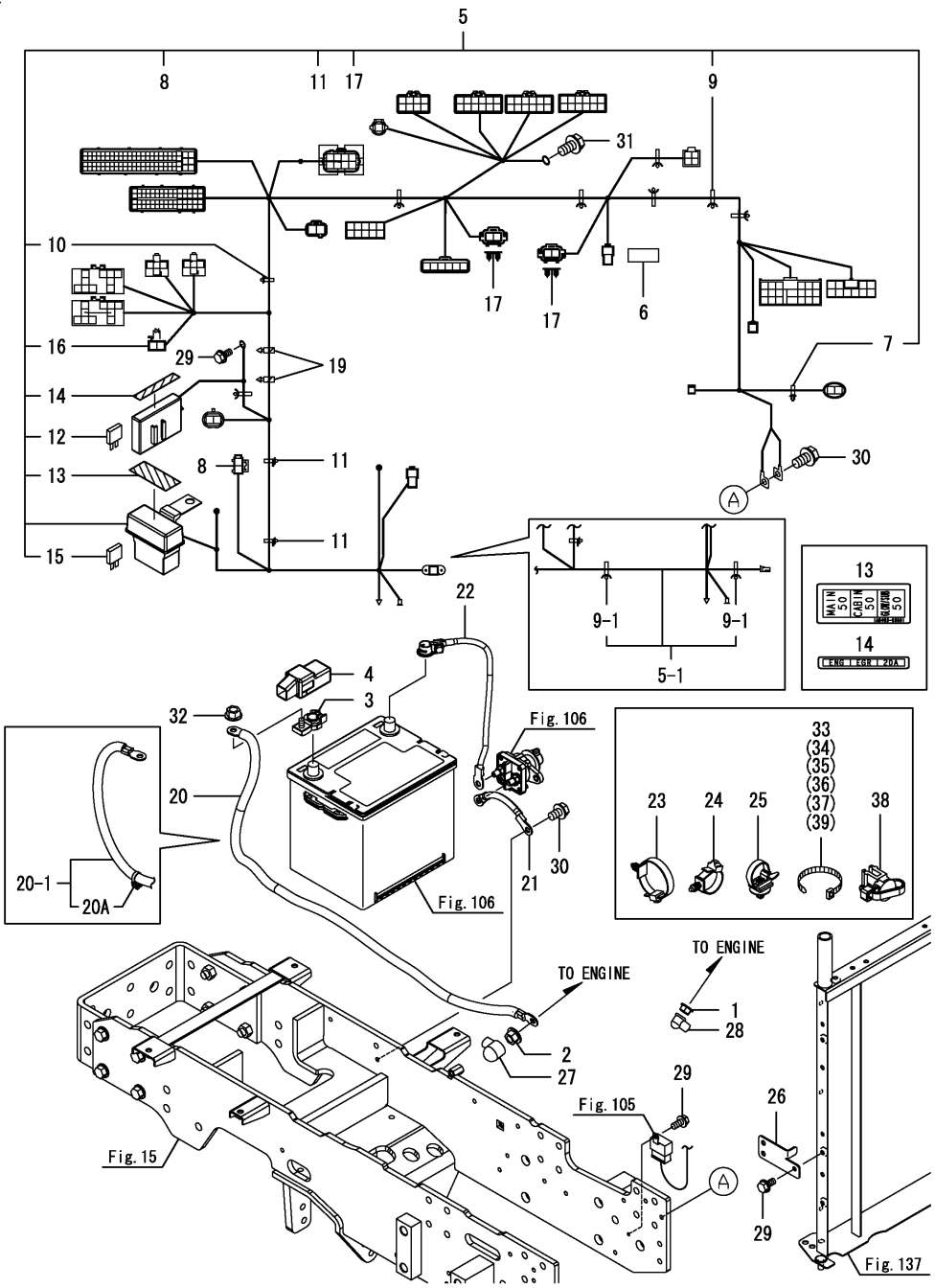

(A)=YT235Y, EU (D)=
(B)= (E)=
(C)= (F)=

No.	Lev.	Parts No.	Description	Q'ty (A)	(B)	(C)	(D)	(E)	(F)	I	R
1	1	194990-22130	NUT, M6	1							
2	1	194990-22140	NUT, M8	1							
3	1	1A8400-51050	TERMINAL, BATTERY +	1							
4	1	1A8400-51060	COVER, TERMINAL	1							
5	1	1A8426-51150	HARNESS ASSY, ENGINE	1							
5-1	1	1A8426-51151	HARNESS ASSY, ENGINE	1						N	
	(A=*2018.06)										
6	2	1A6382-51510	RESISTANCE, 2W R120	1							
7	2	1A8275-51670	CLIP, M8 HOLE	1							
8	2	198153-51700	FUSE, SLOW BLOW 80A	1							
9	2	1A8400-51810	CLAMP, HARNESS	7							
9-1	2	1A8400-51800	CLAMP, HARNESS	9						N	
	(A=*2018.06)										
10	2	1A8400-51830	CLAMP, HARNESS	1							
11	2	1A8400-51840	CLAMP, HARNESS	2							
12	2	198535-52140	FUSE, 20A	3							
13	2	1A8405-65851	LABEL,SBF	1							
14	2	1A8405-65900	LABEL,FUSE ENG	1							
15	2	1E8720-83120	FUSE, SLOW BLOW 50	3							
16	2	1E8235-84910	DIODE, 090 31	1							
17	2	129A00-91430	CLIP, CONNECTOR	2							
19	2	194680-51670	BAND, CLIP	2							
20	1	1A8400-51400	CABLE, + BATTERY	1							
20-1	1	1A8400-51401	CABLE, + BATTERY	1						N	
	(A=*2018.06)										
20A	2	1E9265-84300	CLIP, BAND	1						W	
	(A=*2018.06)										
21	1	1A8426-51400	CABLE, - BATTERY	1							
22	1	194250-51420	CABLE, BATTERY EARTH	1							
23	1	194680-51670	BAND, CLIP	1							
24	1	1A8275-51670	CLIP, M8 HOLE	2							
25	1	1A8400-51810	CLAMP, HARNESS	6							
25-1	1	1E9265-84300	CLIP, BAND	6						N	
	(A=*2018.04)										
25-2	1	1E9265-84300	CLIP, BAND	2						K	
	(A=*2018.06)										
26	1	1A8420-58610	STAY, PLATE	1							
27	1	124550-77030	COVER, TERMINAL B	1							
28	1	124756-77040	COVER, TERMINAL A	1							
29	1	26106-060122	BOLT, M6X 12 PLATED	3							
30	1	26106-080122	BOLT, M8X 12 PLATED	2							
31	1	26106-080122	BOLT, M8X 12 PLATED	1							
32	1	26367-080002	NUT, M8	1							
33	1	29622-140001	BAND, RF140	1							
34	1	29622-140001	BAND, RF140	1							
35	1	29622-140001	BAND, RF140	2							
36	1	29622-140001	BAND, RF140	1							
37	1	29622-140001	BAND, RF140	1							
38	1	1A8420-51810	CLIP, EDGE	1						W	
	(A=*2018.06)										
39	1	29622-250001	BAND, RF250	1						W	

N:Old $\xleftarrow[\text{No}]{\text{Yes}}$ New, Q:Old $\xleftarrow[\text{Yes}]{\text{No}}$ New, R:Old $\xleftarrow[\text{Yes}]{\text{Yes}}$ New, S:Old $\xleftarrow[\text{No}]{\text{No}}$ New, W:Add, Z:Discontinued, F:Interchangeable by set, K:Q'ty Change

++ CONTINUE ++

Copyright (C) 2017 YANMAR GLOBAL CS CO., LTD. All RightsReserved.

Fig.102. WIRE HARNESS(ENGINE)(CABIN)

(A)=YT235Y, EU
(B)=
(C)=
(D)=
(E)=
(F)=

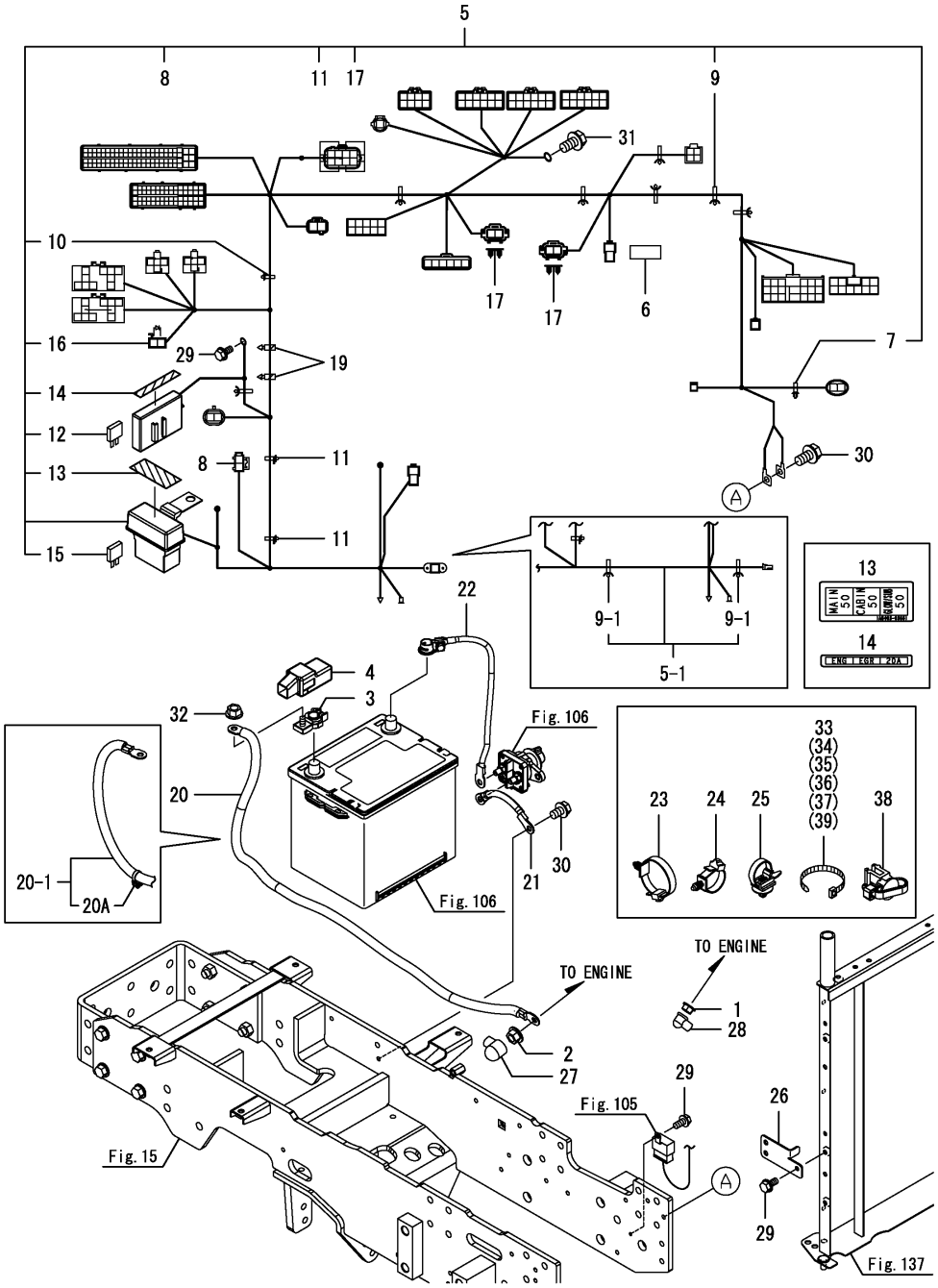

No.	Lev.	Parts No.	Description	Q'ty (A)	(B)	(C)	(D)	(E)	(F)	I	R
	(A=*2018.06)										

N:Old $\frac{\text{Yes}}{\text{No}}$ New, Q:Old $\frac{\text{No}}{\text{Yes}}$ New, R:Old $\frac{\text{Yes}}{\text{Yes}}$ New, S:Old $\frac{\text{No}}{\text{No}}$ New, W:Add, Z:Discontinued, F:Interchangeable by set, K:Q'ty Change

Copyright (C) 2017 YANMAR GLOBAL CS CO., LTD. All RightsReserved.

Fig.103. WIRE HARNESS(TRANSMISSION)

(A)=YT235Y, EU
(B)=
(C)=
(D)=
(E)=
(F)=

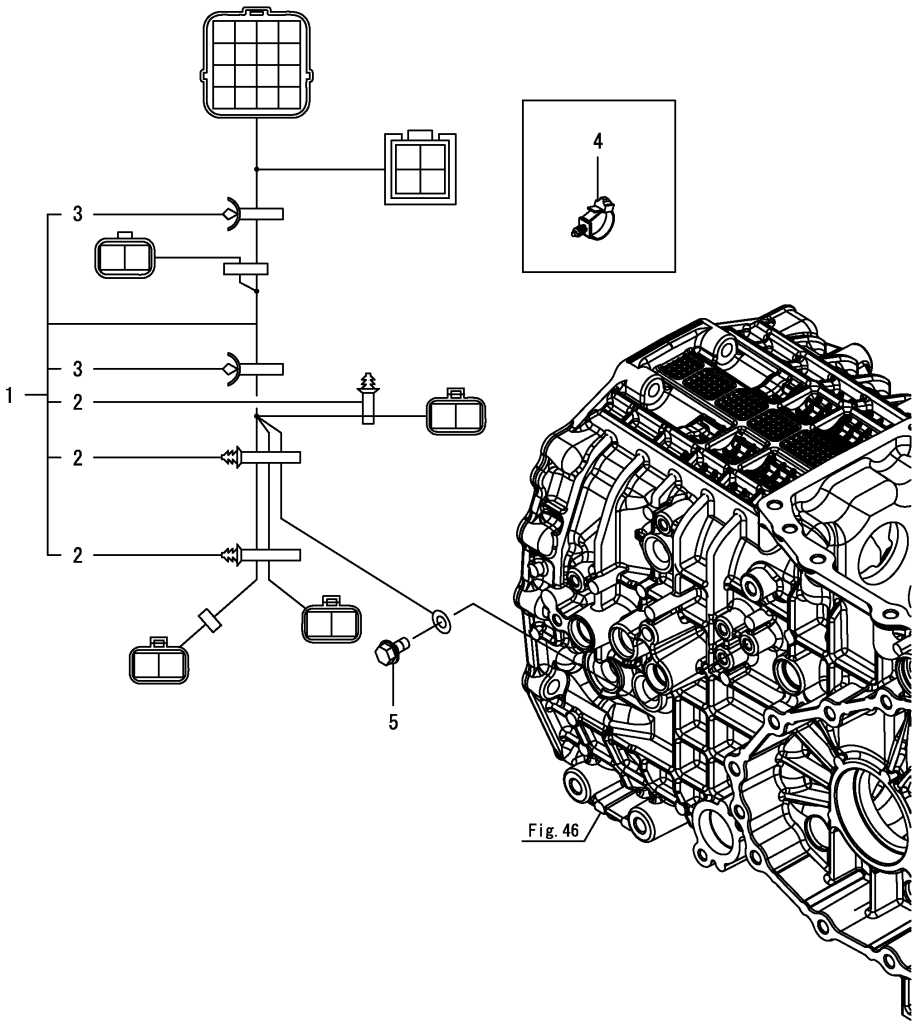

No.	Lev.	Parts No.	Description	Q'ty (A)	(B)	(C)	(D)	(E)	(F)	I	R
1	1	1A8426-51200	HARNESS ASSY, TM	1							
2	2	1A8275-51670	CLIP, M8 HOLE	3							
3	2	1A8400-51810	CLAMP, HARNESS	2							
4	1	1A8275-51670	CLIP, M8 HOLE	1							
5	1	26106-080122	BOLT, M8X 12 PLATED	1							

N:Old $\xleftrightarrow[\text{No}]{\text{Yes}}$ New, Q:Old $\xleftrightarrow[\text{Yes}]{\text{No}}$ New, R:Old $\xleftrightarrow[\text{Yes}]{\text{Yes}}$ New, S:Old $\xleftrightarrow[\text{No}]{\text{No}}$ New, W:Add, Z:Discontinued, F:Interchangeable by set, K:Q'ty Change

Copyright (C) 2017 YANMAR GLOBAL CS CO., LTD. All RightsReserved.

Fig.104. WIRE HARNESS(FLOOR)

(A)=YT235Y, EU
(B)=
(C)=
(D)=
(E)=
(F)=

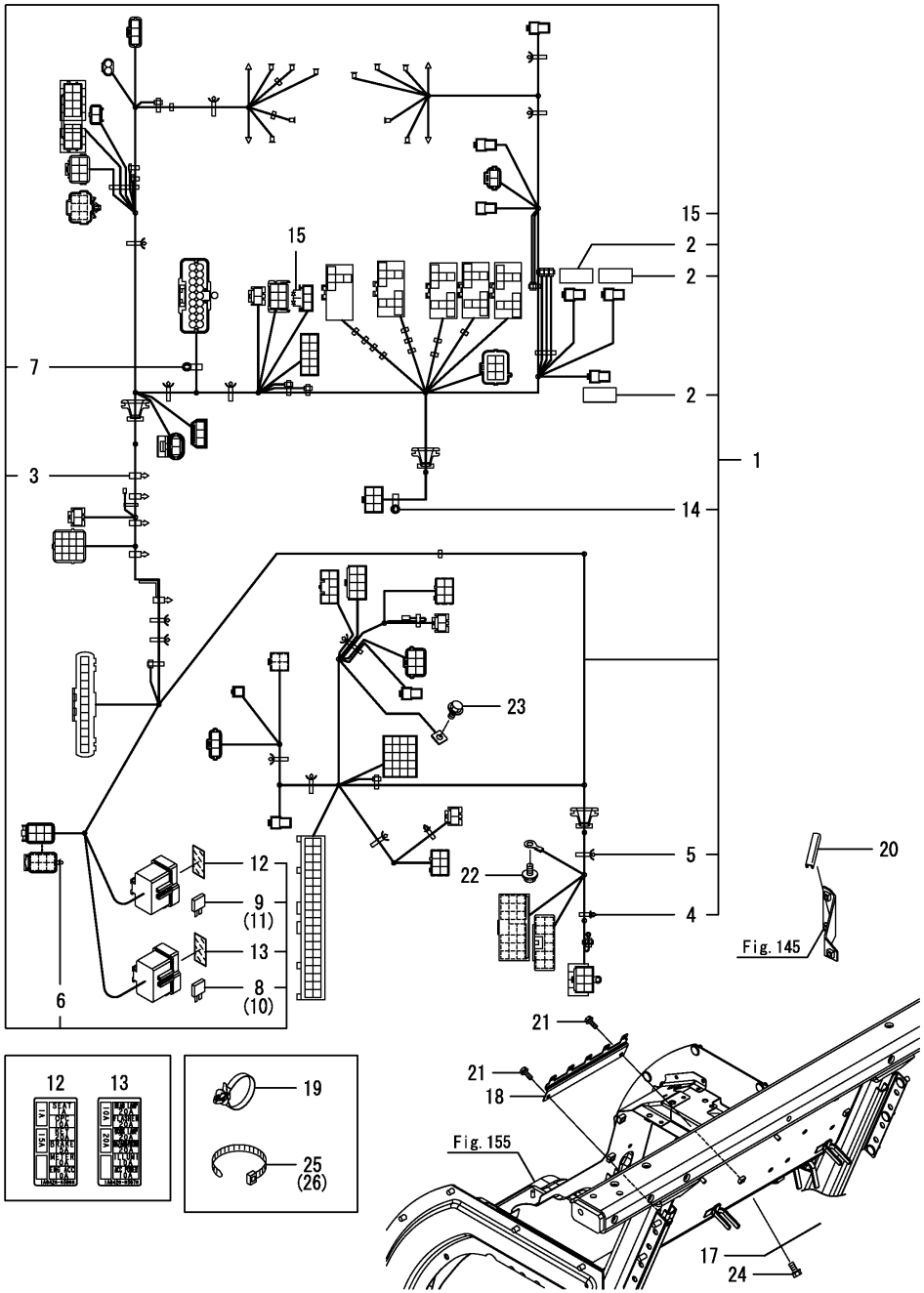

No.	Lev.	Parts No.	Description	Q'ty (A)	(B)	(C)	(D)	(E)	(F)	I	R
1	1	1A8426-51302	HARNESS ASSY, FLOOR	1							
2	2	1A6382-51510	RESISTANCE, 2W R120	3							
3	2	194680-51670	BAND, CLIP	5							
4	2	1A8275-51670	CLIP, M8 HOLE	2							
5	2	1A8400-51810	CLAMP, HARNESS	13							
6	2	1A8400-51880	CLIP, HARNESS	1							
7	2	1A8060-51940	TIE, STUD BOLT M8	1							
8	2	198535-52120	FUSE, 10A	6							
9	2	198535-52130	FUSE, 15A	2							
10	2	198535-52140	FUSE, 20A	6							
11	2	1A8426-52800	FUSE, 1A	2							
12	2	1A8426-65860	LABEL,FUSE A	1							
13	2	1A8426-65870	LABEL,FUSE B	1							
14	2	1E8665-83100	CLIP, BAND	1							
15	2	1E8450-84900	DIODE, 1.5AX2	1							
17	1	1A8426-53400	COVER, HARNESS	1							
18	1	1A8426-58620	BRACKET, RELAY	1							
19	1	1E9265-84300	CLIP, BAND	2							
20	1	198093-84810	SEAL, FENDER	1							
21	1	26106-060162	BOLT, M6X 16 PLATED	2							
22	1	26106-080122	BOLT, M8X 12 PLATED	1							
23	1	26106-080122	BOLT, M8X 12 PLATED	1							
24	1	26106-080162	BOLT, M8X 16 PLATED	2							
25	1	29622-140001	BAND, RF140	1							
26	1	29622-250001	BAND, RF250	1							

N:Old $\xleftarrow[\text{No}]{\text{Yes}}$ New, Q:Old $\xleftarrow[\text{Yes}]{\text{No}}$ New, R:Old $\xleftarrow[\text{Yes}]{\text{Yes}}$ New, S:Old $\xleftarrow[\text{No}]{\text{No}}$ New, W:Add, Z:Discontinued, F:Interchangeable by set, K:Q'ty Change

Copyright (C) 2017 YANMAR GLOBAL CS CO., LTD. All RightsReserved.

Fig.105. WIRE HARNESS(FLOOR)(CABIN)

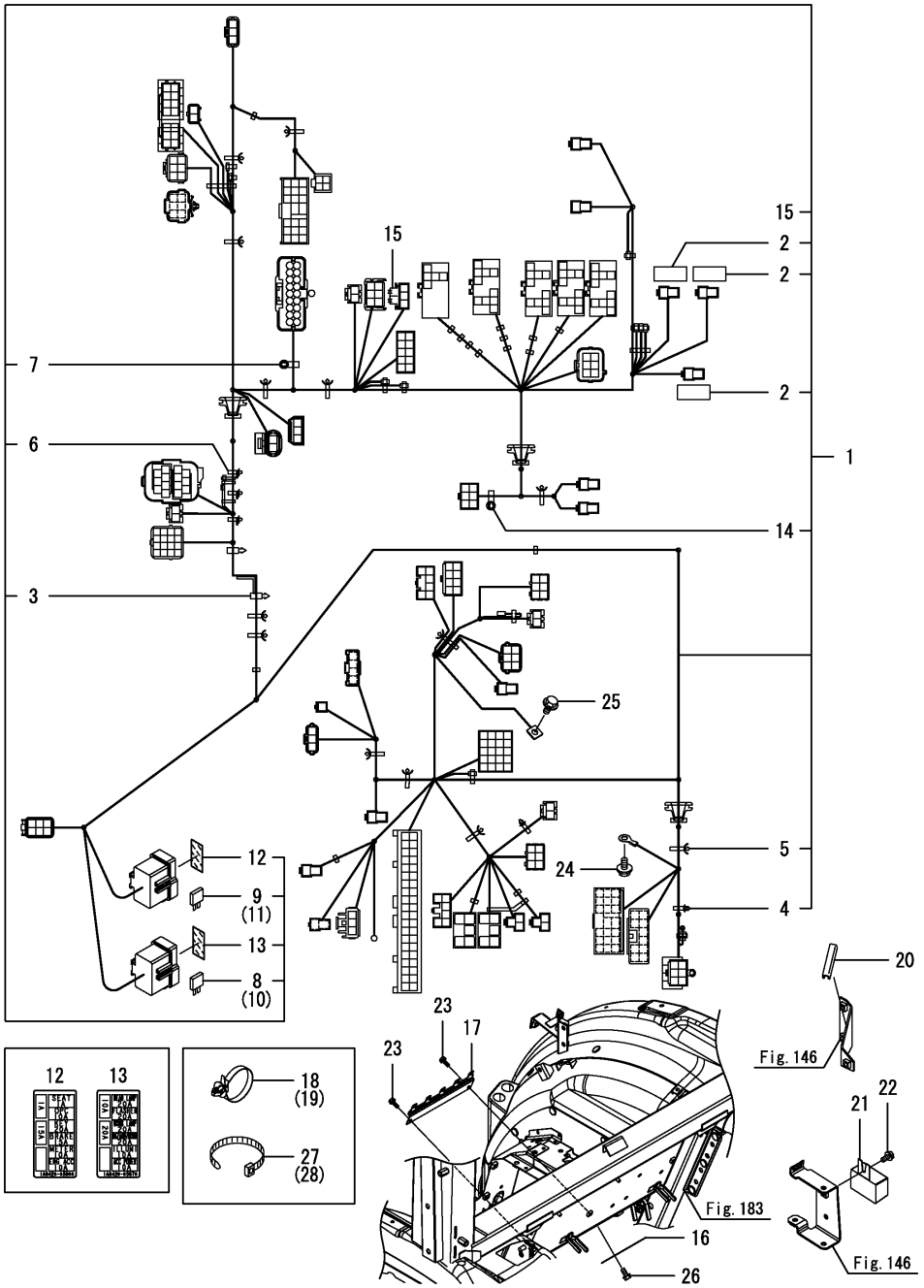

(A)=YT235Y, EU
(B)=
(C)=
(D)=
(E)=
(F)=

No.	Lev.	Parts No.	Description	Q'ty (A)	(B)	(C)	(D)	(E)	(F)	I	R
1	1	1A8426-51351	HARNESS ASSY, FLOOR	1							
2	2	1A6382-51510	RESISTANCE, 2W R120	3							
3	2	194680-51670	BAND, CLIP	2							
4	2	1A8275-51670	CLIP, M8 HOLE	2							
5	2	1A8400-51810	CLAMP, HARNESS	14							
6	2	1A8400-51840	CLAMP, HARNESS	3							
7	2	1A8060-51940	TIE, STUD BOLT M8	1							
8	2	198535-52120	FUSE, 10A	6							
9	2	198535-52130	FUSE, 15A	2							
10	2	198535-52140	FUSE, 20A	6							
11	2	1A8426-52800	FUSE, 1A	2							
12	2	1A8426-65860	LABEL,FUSE A	1							
13	2	1A8426-65870	LABEL,FUSE B	1							
14	2	1E8665-83100	CLIP, BAND	1							
15	2	1E8450-84900	DIODE, 1.5AX2	1							
16	1	1A8426-53400	COVER, HARNESS	1							
17	1	1A8426-58620	BRACKET, RELAY	1							
18	1	1E9265-84300	CLIP, BAND	1							
19	1	1E9265-84300	CLIP, BAND	1							
20	1	198093-84810	SEAL, FENDER	1							
21	1	1E6A10-99011	COIL,NOISE CUT A	1							
22	1	26106-060122	BOLT, M6X 12 PLATED	1							
23	1	26106-060162	BOLT, M6X 16 PLATED	2							
24	1	26106-080122	BOLT, M8X 12 PLATED	1							
25	1	26106-080122	BOLT, M8X 12 PLATED	1							
26	1	26106-080162	BOLT, M8X 16 PLATED	2							
27	1	29622-140001	BAND, RF140	1							
28	1	29622-250001	BAND, RF250	1							

N:Old $\xleftarrow[\text{No}]{\text{Yes}}$ New, Q:Old $\xleftarrow[\text{Yes}]{\text{No}}$ New, R:Old $\xleftarrow[\text{Yes}]{\text{Yes}}$ New, S:Old $\xleftarrow[\text{No}]{\text{No}}$ New, W:Add, Z:Discontinued, F:Interchangeable by set, K:Q'ty Change

Copyright (C) 2017 YANMAR GLOBAL CS CO., LTD. All RightsReserved.

Fig.106. BATTERY

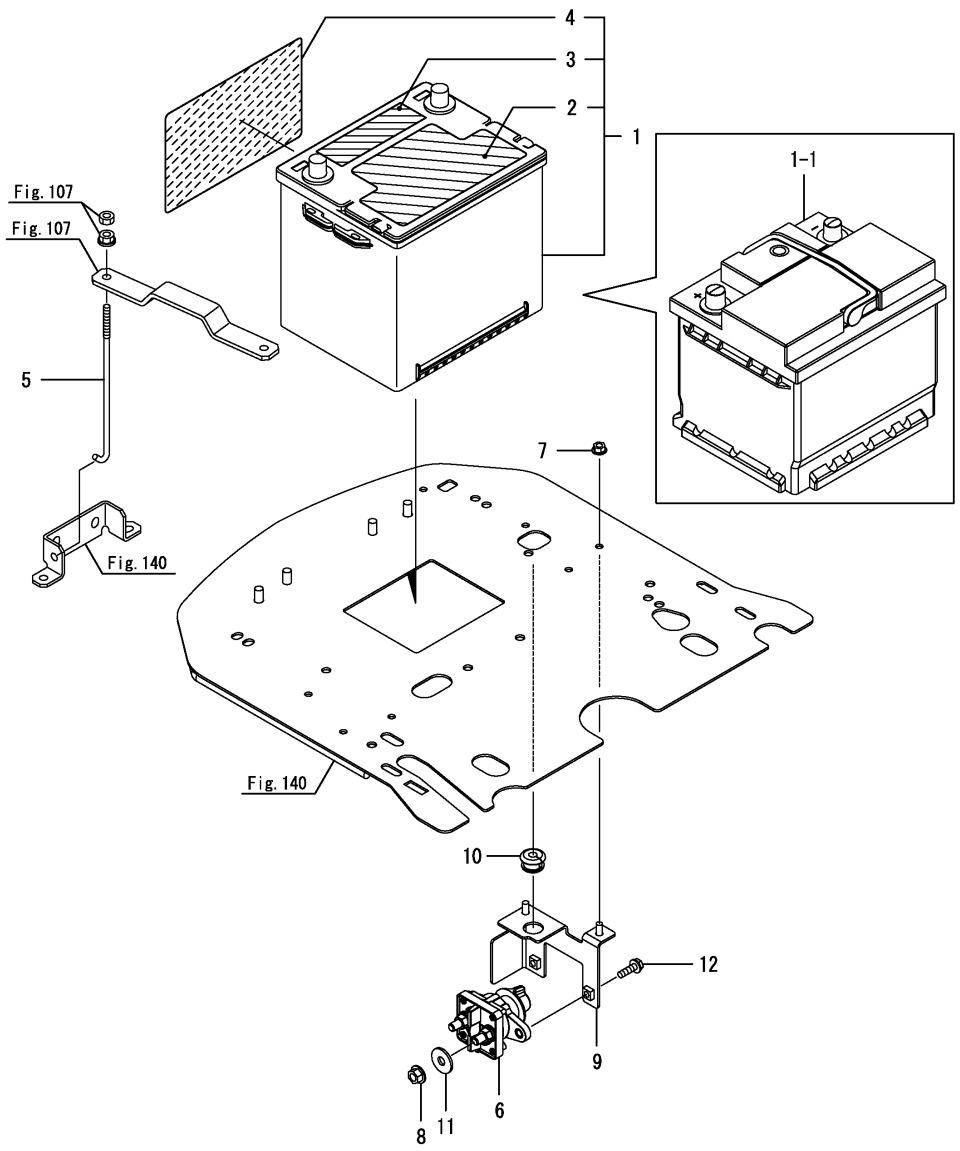

(A)=YT235Y, EU
(B)=
(C)=
(D)=
(E)=
(F)=

No.	Lev.	Parts No.	Description	Q'ty (A)	(B)	(C)	(D)	(E)	(F)	I	R
1	1	1A8160-51500	BATTERY ASSY, 526RMF	1							
1-1	1	1A842E-51510	BATTERY, 55401 SMF	1						R	
	(A=*2020.07)										
2	2	1A8160-51522	LABEL, BATTERY	1						Z	
	(A=*2020.07)										
3	2	1A8160-51531	LABEL, BATTERY TOP	1						Z	
	(A=*2020.07)										
4	2	1A8275-51540	LABEL, BATTERY BACK	1						Z	
	(A=*2020.07)										
5	1	1A8425-58120	ROD, BATTERY CLAMP	1							
6	1	172544-16200	SWITCH ASSY, BATTERY	1							
7	1	194990-22130	NUT, M6	2							
8	1	194990-22140	NUT, M8	2							
9	1	1A8426-58410	STAY ASSY,BATTERY SW	1							
10	1	198200-61490	GROMMET, 8	1							
11	1	22157-080000	WASHER, 8	2							
12	1	26106-060202	BOLT, M6X 20 PLATED	2							

N:Old $\frac{\text{Yes}}{\text{No}}$ New, Q:Old $\frac{\text{No}}{\text{Yes}}$ New, R:Old $\frac{\text{Yes}}{\text{Yes}}$ New, S:Old $\frac{\text{No}}{\text{No}}$ New, W:Add, Z:Discontinued, F:Interchangeable by set, K:Q'ty Change

Copyright (C) 2017 YANMAR GLOBAL CS CO., LTD. All RightsReserved.

Fig.107. BATTERY CLAMP

(A)=YT235Y, EU
(B)=
(C)=
(D)=
(E)=
(F)=

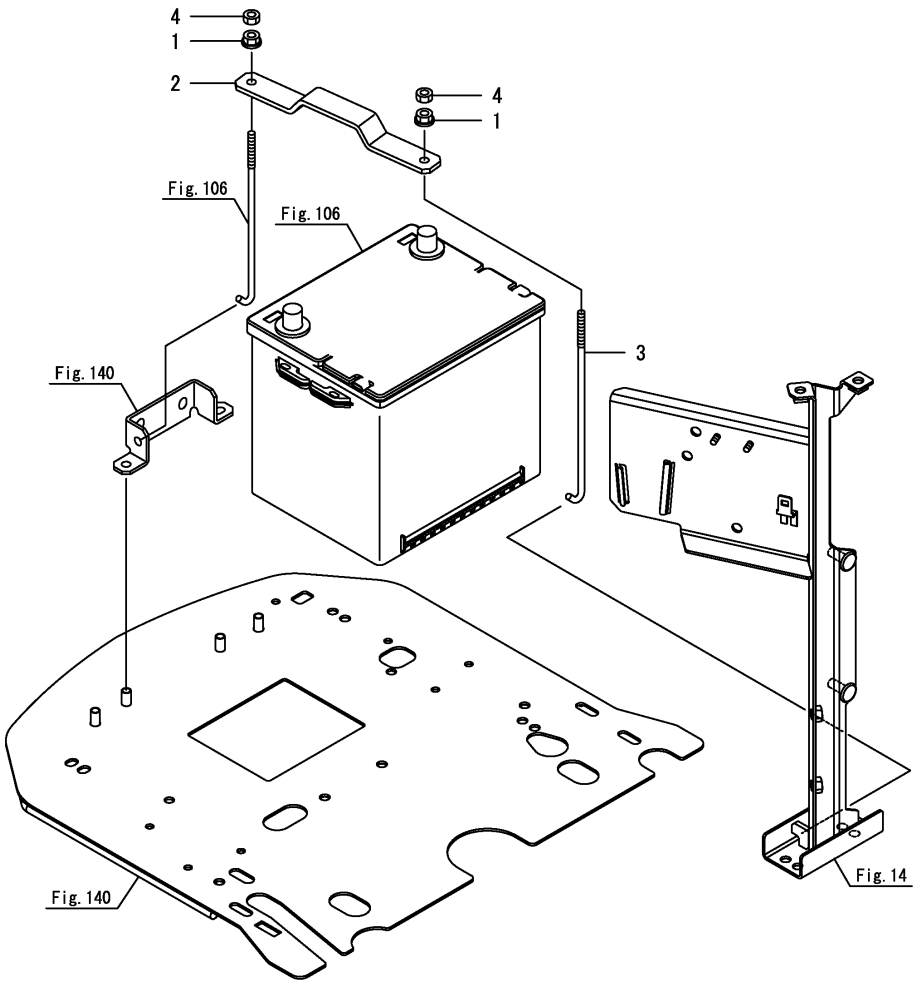

No.	Lev.	Parts No.	Description	Q'ty (A)	(B)	(C)	(D)	(E)	(F)	I	R
1	1	194990-22130	NUT, M6	2							
2	1	1A8425-58110	CLAMP, BATTERY	1							
3	1	198165-58120	ROD, BATTERY CLAMP	1							
4	1	26716-060002	NUT, M6	2							

N:Old $\xleftrightarrow[\text{No}]{\text{Yes}}$ New, Q:Old $\xleftrightarrow[\text{Yes}]{\text{No}}$ New, R:Old $\xleftrightarrow[\text{Yes}]{\text{Yes}}$ New, S:Old $\xleftrightarrow[\text{No}]{\text{No}}$ New, W:Add, Z:Discontinued, F:Interchangeable by set, K:Q'ty Change

Copyright (C) 2017 YANMAR GLOBAL CS CO., LTD. All RightsReserved.

Fig.108. WIRE HARNESS(BONNET)

(A)=YT235Y, EU
(B)=
(C)=
(D)=
(E)=
(F)=

No.	Lev.	Parts No.	Description	Q'ty (A)	(B)	(C)	(D)	(E)	(F)	I	R
1	1	195616-24930	TRIM	1							
2	1	1A8420-51600	HARNESS ASSY, BONNET	1							
3	2	1A8400-51810	CLAMP, HARNESS	8							
4	2	1A8400-51820	CLIP, HARNESS	1							

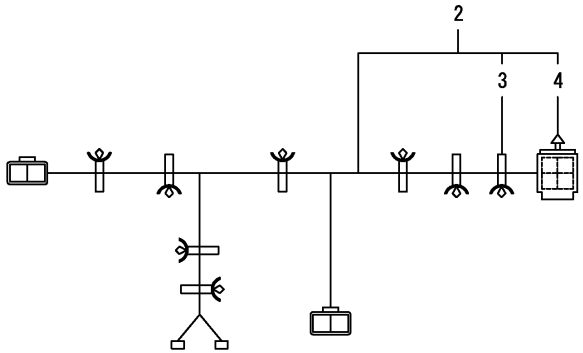

N:Old ◄Yes/No► New, Q:Old ◄No/Yes► New, R:Old ◄Yes/Yes► New, S:Old ◄No/No► New, W:Add, Z:Discontinued, F:Interchangeable by set, K:Q'ty Change

Copyright (C) 2017 YANMAR GLOBAL CS CO., LTD. All RightsReserved.

Fig.109. WIRE HARNESS(CABIN)

(A)=YT235Y, EU
(B)=
(C)=
(D)=
(E)=
(F)=

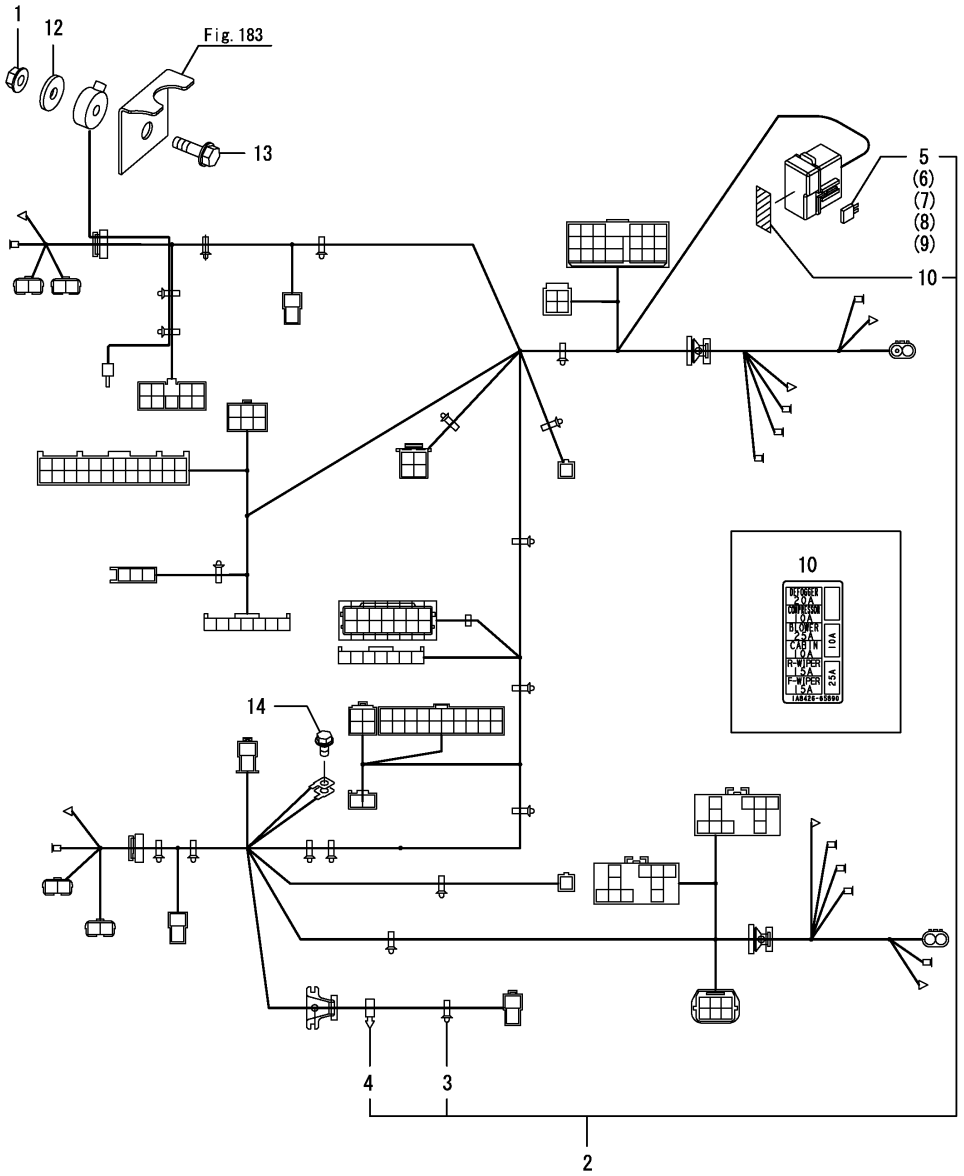

No.	Lev.	Parts No.	Description	Q'ty (A)	(B)	(C)	(D)	(E)	(F)	I	R
1	1	194990-22130	NUT, M6	1							
2	1	1A8426-51700	HARNESS ASSY, CABIN	1							
3	2	1A8400-51810	CLAMP, HARNESS	18							
4	2	1A8400-51830	CLAMP, HARNESS	1							
5	2	198535-52110	FUSE, 5A	1							
6	2	198535-52120	FUSE, 10A	2							
7	2	198535-52130	FUSE, 15A	2							
8	2	198535-52140	FUSE, 20A	1							
9	2	1A7450-52180	FUSE, 25A	2							
10	2	1A8426-65890	LABEL,FUSE CAB	1							
12	1	22157-060000	WASHER, 6	1							
13	1	26106-060202	BOLT, M6X 20 PLATED	1							
14	1	26106-080162	BOLT, M8X 16 PLATED	1							

N:Old $\xleftarrow[\text{No}]{\text{Yes}}$ New, Q:Old $\xleftarrow[\text{Yes}]{\text{No}}$ New, R:Old $\xleftarrow[\text{Yes}]{\text{Yes}}$ New, S:Old $\xleftarrow[\text{No}]{\text{No}}$ New, W:Add, Z:Discontinued, F:Interchangeable by set, K:Q'ty Change

Copyright (C) 2017 YANMAR GLOBAL CS CO., LTD. All RightsReserved.

Fig.110. SENSOR(TURNING)

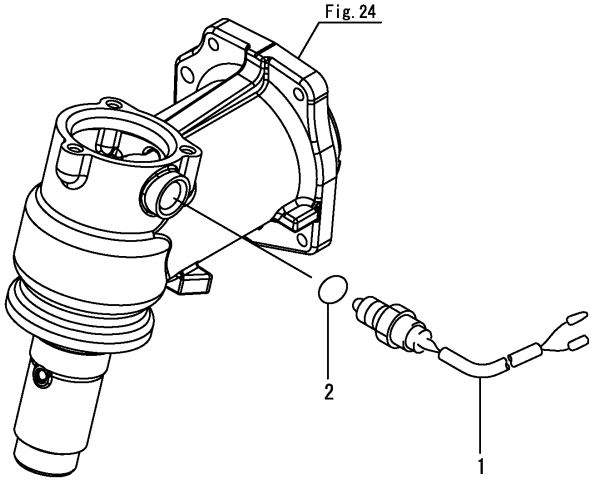

(A)=YT235Y, EU
(B)=
(C)=
(D)=
(E)=
(F)=

No.	Lev.	Parts No.	Description	Q'ty (A)	(B)	(C)	(D)	(E)	(F)	I	R
1	1	198071-52190	SWITCH, HIGH GRIP	1							
2	1	24311-000180	O-RING, 1AP18.0	1							

N:Old $\xleftarrow[\text{No}]{\text{Yes}}$ New, Q:Old $\xleftarrow[\text{Yes}]{\text{No}}$ New, R:Old $\xleftarrow[\text{Yes}]{\text{Yes}}$ New, S:Old $\xleftarrow[\text{No}]{\text{No}}$ New, W:Add, Z:Discontinued, F:Interchangeable by set, K:Q'ty Change

Copyright (C) 2017 YANMAR GLOBAL CS CO., LTD. All RightsReserved.

Fig.111. SWITCH(FLOOR)

(A)=YT235Y, EU
(B)=
(C)=
(D)=
(E)=
(F)=

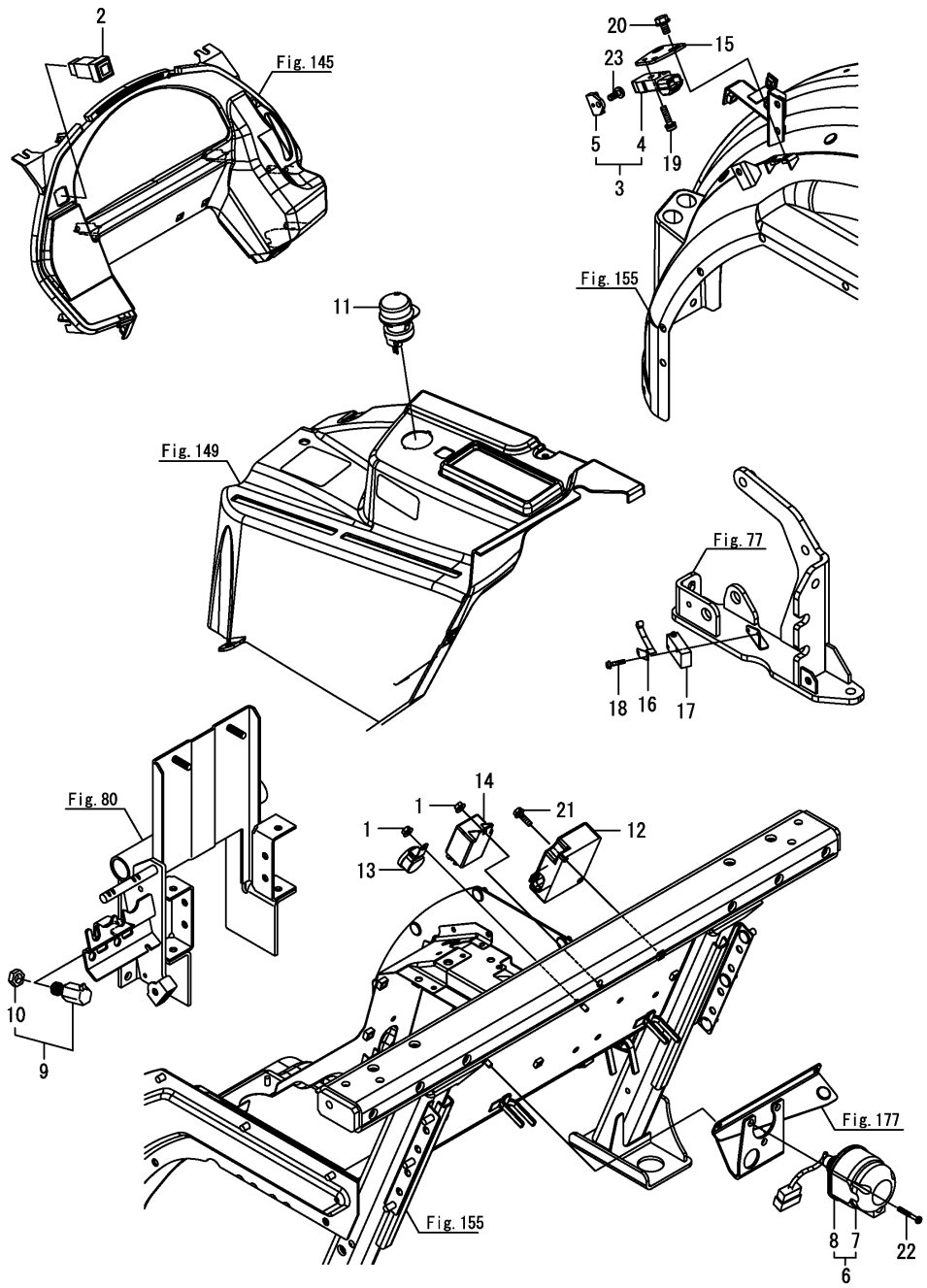

No.	Lev.	Parts No.	Description	Q'ty (A)	(B)	(C)	(D)	(E)	(F)	I	R
1	1	194990-22130	NUT, M6	2							
2	1	1A7335-52120	SWITCH, HAZARD	1							
3	1	1A8060-52130	SWITCH ASSY,INTERLOC	1							
4	2	1A8060-52140	SWITCH, INTERLOCK NO	1							
5	2	1A8060-52170	MAGNET, INTERLOCK	1							
6	1	198163-52150	COUPLER SET, TRAILER	1							
7	2	198163-52110	COUPLER ASSY,TRAILER	1							
8	2	198163-52120	BOOT, COUPLER	1							
9	1	198223-52151	SWITCH ASSY, LAMP	1							
10	2	26776-120002	NUT, LOCK M12	1							
11	1	1A7340-52290	SWITCH, PTO ON-OFF	1							
12	1	1A8476-57102	RELAY UNIT,EU	1							
13	1	174570-57110	BUZZER, ALARM	1							
14	1	1A7510-57200	RELAY, FLASHER	1							
15	1	1A8406-62191	PLATE, SENSOR	1							
16	1	1E8255-81180	LEVER, ROLLER NV	1							
17	1	1E8915-81450	SWITCH, MICRO	1							
18	1	26023-030162	SCREW, M3X16	2							
19	1	26023-050202	SCREW, M5X20	1							
20	1	26106-060102	BOLT, M6X 10 PLATED	2							
21	1	26106-060202	BOLT, M6X 20 PLATED	2							
22	1	26557-050352	SCREW, M5X35	3							
23	1	26587-050122	SCREW, M5X12	1							

N:Old $\frac{\text{Yes}}{\text{No}}$ New, Q:Old $\frac{\text{No}}{\text{Yes}}$ New, R:Old $\frac{\text{Yes}}{\text{Yes}}$ New, S:Old $\frac{\text{No}}{\text{No}}$ New, W:Add, Z:Discontinued, F:Interchangeable by set, K:Q'ty Change

Copyright (C) 2017 YANMAR GLOBAL CS CO., LTD. All RightsReserved.

Fig.112. SWITCH(TRANSMISSION)

(A)=YT235Y, EU
(B)=
(C)=
(D)=
(E)=
(F)=

No.	Lev.	Parts No.	Description	Q'ty (A)	(B)	(C)	(D)	(E)	(F)	I	R
1	1	198269-52190	SWITCH, SAFETY	1							
2	1	198269-52190	SWITCH, SAFETY	1							
3	1	198269-52190	SWITCH, SAFETY	1							
4	1	24311-000180	O-RING, 1AP18.0	1							
5	1	24311-000180	O-RING, 1AP18.0	1							
6	1	24311-000180	O-RING, 1AP18.0	1							

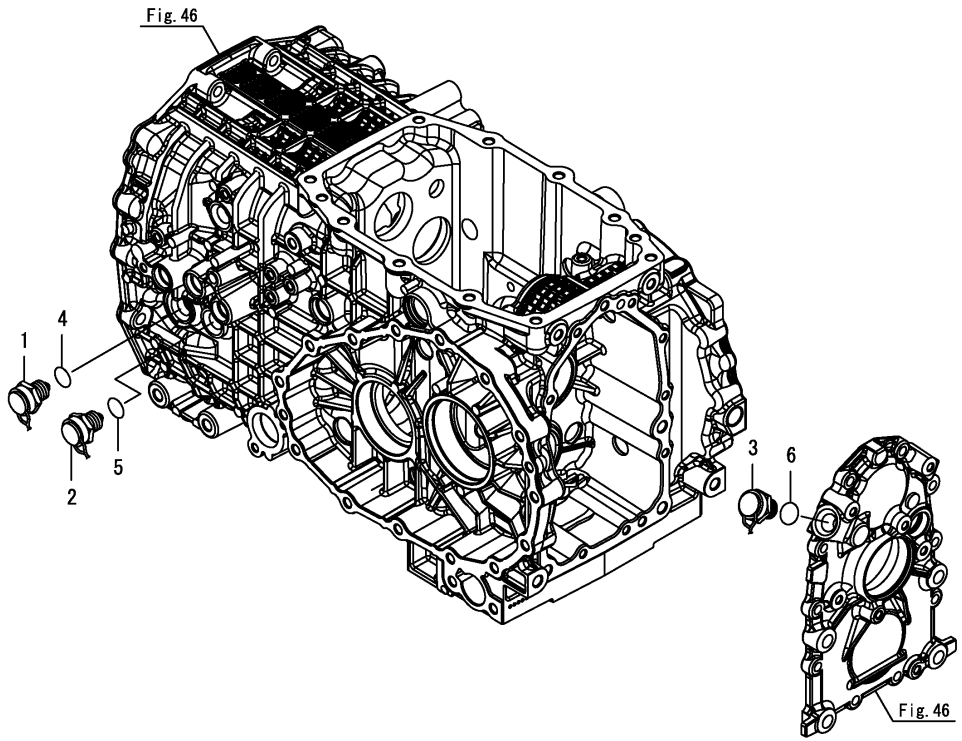

N:Old $\xleftarrow[\text{No}]{\text{Yes}}$ New, Q:Old $\xleftarrow[\text{Yes}]{\text{No}}$ New, R:Old $\xleftarrow[\text{Yes}]{\text{Yes}}$ New, S:Old $\xleftarrow[\text{No}]{\text{No}}$ New, W:Add, Z:Discontinued, F:Interchangeable by set, K:Q'ty Change

Copyright (C) 2017 YANMAR GLOBAL CS CO., LTD. All RightsReserved.

Fig.113. SWITCH(STARTER)

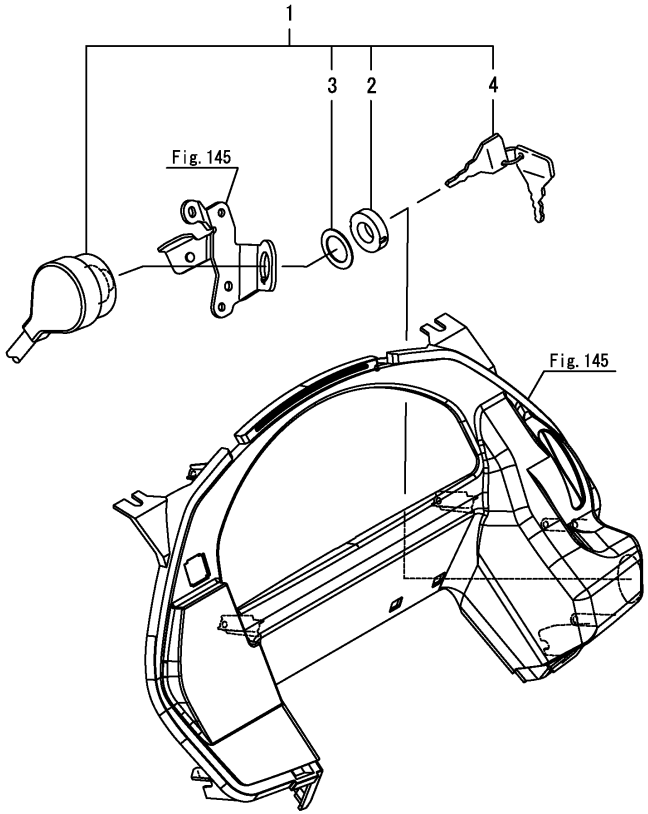

(A)=YT235Y, EU
(B)=
(C)=
(D)=
(E)=
(F)=

No.	Lev.	Parts No.	Description	Q'ty (A)	(B)	(C)	(D)	(E)	(F)	I	R
1	1	198162-52110	SWITCH, STARTING	1							
2	2	198360-52320	NUT, RING	1							
3	2	198360-52330	WASHER	1							
4	2	198162-52150	KEY ASSY	1							

N:Old $\xleftrightarrow[\text{No}]{\text{Yes}}$ New, Q:Old $\xleftrightarrow[\text{Yes}]{\text{No}}$ New, R:Old $\xleftrightarrow[\text{Yes}]{\text{Yes}}$ New, S:Old $\xleftrightarrow[\text{No}]{\text{No}}$ New, W:Add, Z:Discontinued, F:Interchangeable by set, K:Q'ty Change

Copyright (C) 2017 YANMAR GLOBAL CS CO., LTD. All RightsReserved.

Fig.114. SWITCH(STARTER)(CABIN)

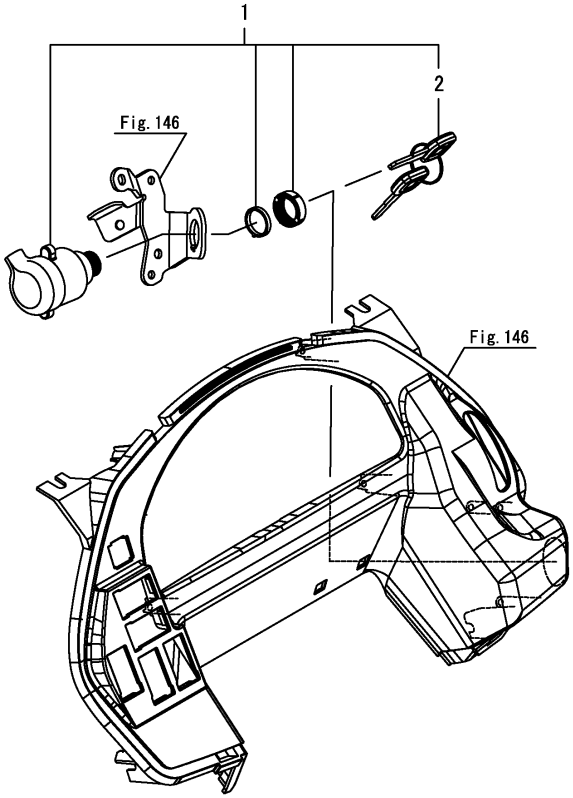

(A)=YT235Y, EU (D)=
(B)= (E)=
(C)= (F)=

No.	Lev.	Parts No.	Description	Q'ty (A)	(B)	(C)	(D)	(E)	(F)	I	R
1	1	1A7850-52110	SWITCH ASSY, STARTER	1							
2	2	1A7850-52130	KEY ASSY	1							

N:Old $\xleftrightarrow[\text{No}]{\text{Yes}}$ New, Q:Old $\xleftrightarrow[\text{Yes}]{\text{No}}$ New, R:Old $\xleftrightarrow[\text{Yes}]{\text{Yes}}$ New, S:Old $\xleftrightarrow[\text{No}]{\text{No}}$ New, W:Add, Z:Discontinued, F:Interchangeable by set, K:Q'ty Change

Copyright (C) 2017 YANMAR GLOBAL CS CO., LTD. All RightsReserved.

Fig.115. SWITCH(COLUMN COVER)

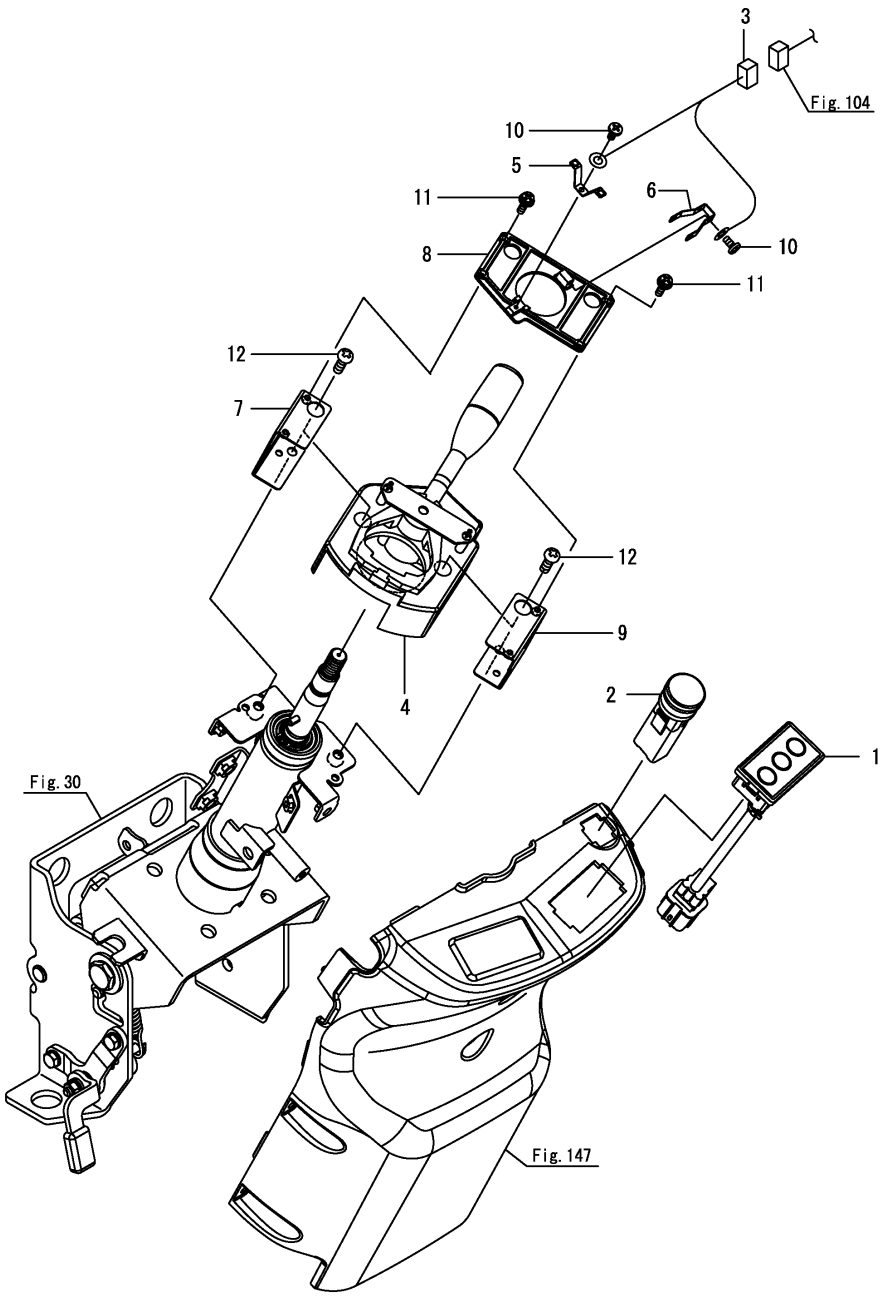

(A)=YT235Y, EU (D)=
(B)= (E)=
(C)= (F)=

No.	Lev.	Parts No.	Description	Q'ty (A)	(B)	(C)	(D)	(E)	(F)	I	R
1	1	1A8426-52551	SWITCH, TRAVELING	1							
2	1	1E6C20-81300	SWITCH, LAMP OR NL	1							
3	1	1A8060-51322	CABLE, STEERING HORN	1							
4	1	1A8400-52140	LEVER, COMBINATION	1							
5	1	1A8060-61680	TERMINAL, HORN +	1							
6	1	1A8060-61690	TERMINAL, HORN -	1							
7	1	1A8060-67450	BRACKET ASSY, L	1							
8	1	1A8060-67471	SUPPORT, TERMINAL	1							
9	1	1A8060-67501	BRACKET ASSY,TER R	1							
10	1	22873-300060	SCREW, 3.0 X 6	2							
11	1	26023-030102	SCREW, M3X10	4							
12	1	26557-060162	SCREW M 6X 16	2							

N:Old $\frac{\text{Yes}}{\text{No}}$ New, Q:Old $\frac{\text{No}}{\text{Yes}}$ New, R:Old $\frac{\text{Yes}}{\text{Yes}}$ New, S:Old $\frac{\text{No}}{\text{No}}$ New, W:Add, Z:Discontinued, F:Interchangeable by set, K:Q'ty Change

Copyright (C) 2017 YANMAR GLOBAL CS CO., LTD. All RightsReserved.

Fig.116. SWITCH COVER

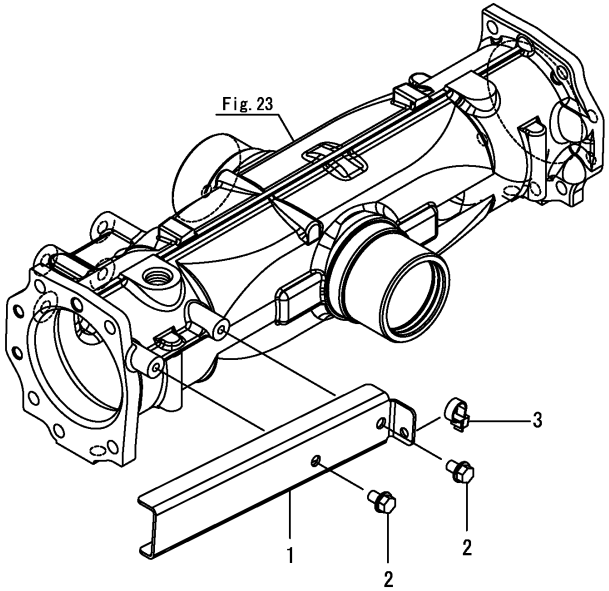

(A)=YT235Y, EU (D)=
(B)= (E)=
(C)= (F)=

No.	Lev.	Parts No.	Description	Q'ty (A)	(B)	(C)	(D)	(E)	(F)	I	R
1	1	1A8406-19110	COVER, SWITCH	1							
2	1	26106-080122	BOLT, M8X 12 PLATED	2							
3	1	29622-140001	BAND, RF140	1							

N:Old $\xleftrightarrow[\text{No}]{\text{Yes}}$ New, Q:Old $\xleftrightarrow[\text{Yes}]{\text{No}}$ New, R:Old $\xleftrightarrow[\text{Yes}]{\text{Yes}}$ New, S:Old $\xleftrightarrow[\text{No}]{\text{No}}$ New, W:Add, Z:Discontinued, F:Interchangeable by set, K:Q'ty Change

Copyright (C) 2017 YANMAR GLOBAL CS CO., LTD. All RightsReserved.

Fig.117. CONNECTOR COVER

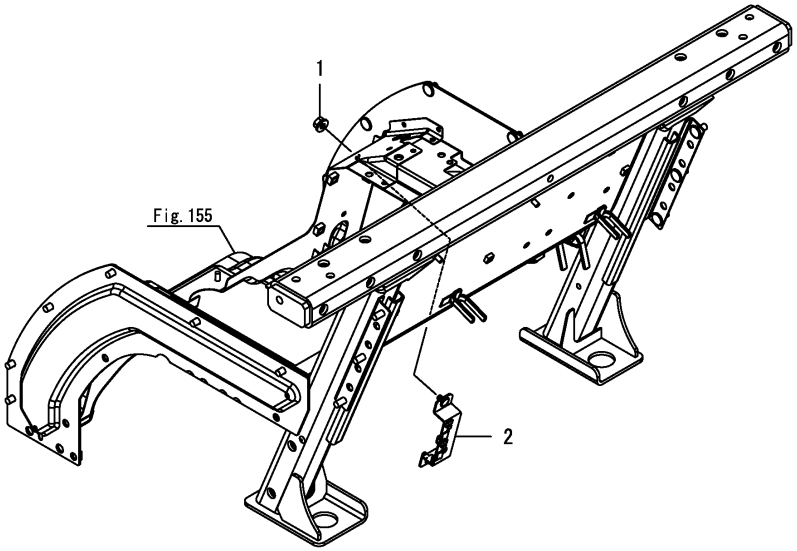

(A)=YT235Y, EU
(B)=
(C)=
(D)=
(E)=
(F)=

No.	Lev.	Parts No.	Description	Q'ty (A)	(B)	(C)	(D)	(E)	(F)	I	R
1	1	194990-22130	NUT, M6	2							
2	1	1A8400-51863	COVER, CONNECTOR	1							

N:Old $\xleftarrow[\text{No}]{\text{Yes}}$ New, Q:Old $\xleftarrow[\text{Yes}]{\text{No}}$ New, R:Old $\xleftarrow[\text{Yes}]{\text{Yes}}$ New, S:Old $\xleftarrow[\text{No}]{\text{No}}$ New, W:Add, Z:Discontinued, F:Interchangeable by set, K:Q'ty Change

Copyright (C) 2017 YANMAR GLOBAL CS CO., LTD. All RightsReserved.

Fig.118. SWITCH(CABIN)

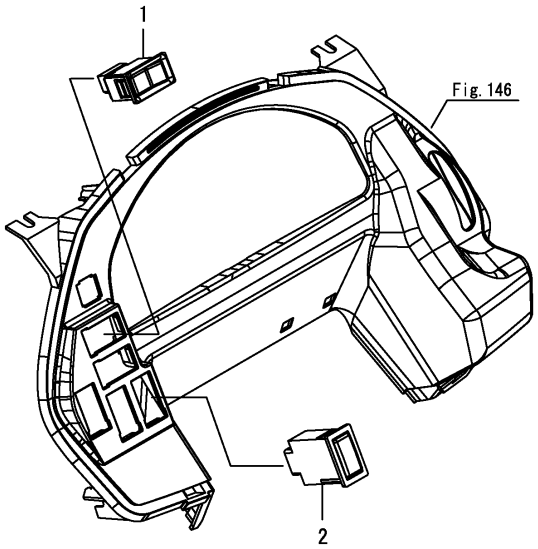

(A)=YT235Y, EU (D)=
(B)= (E)=
(C)= (F)=

No.	Lev.	Parts No.	Description	Q'ty (A)	(B)	(C)	(D)	(E)	(F)	I	R
1	1	1A8400-52430	SWITCH, FRONT WIPER	1							
2	1	1A7805-52600	SWITCH, DEFOGGER	1							

N:Old $\xleftarrow[\text{No}]{\text{Yes}}$ New, Q:Old $\xleftarrow[\text{Yes}]{\text{No}}$ New, R:Old $\xleftarrow[\text{Yes}]{\text{Yes}}$ New, S:Old $\xleftarrow[\text{No}]{\text{No}}$ New, W:Add, Z:Discontinued, F:Interchangeable by set, K:Q'ty Change

Copyright (C) 2017 YANMAR GLOBAL CS CO., LTD. All RightsReserved.

Fig.119. LAMP(FLOOR)(FRONT)(CABIN)

(A)=YT235Y, EU
(B)=
(C)=
(D)=
(E)=
(F)=

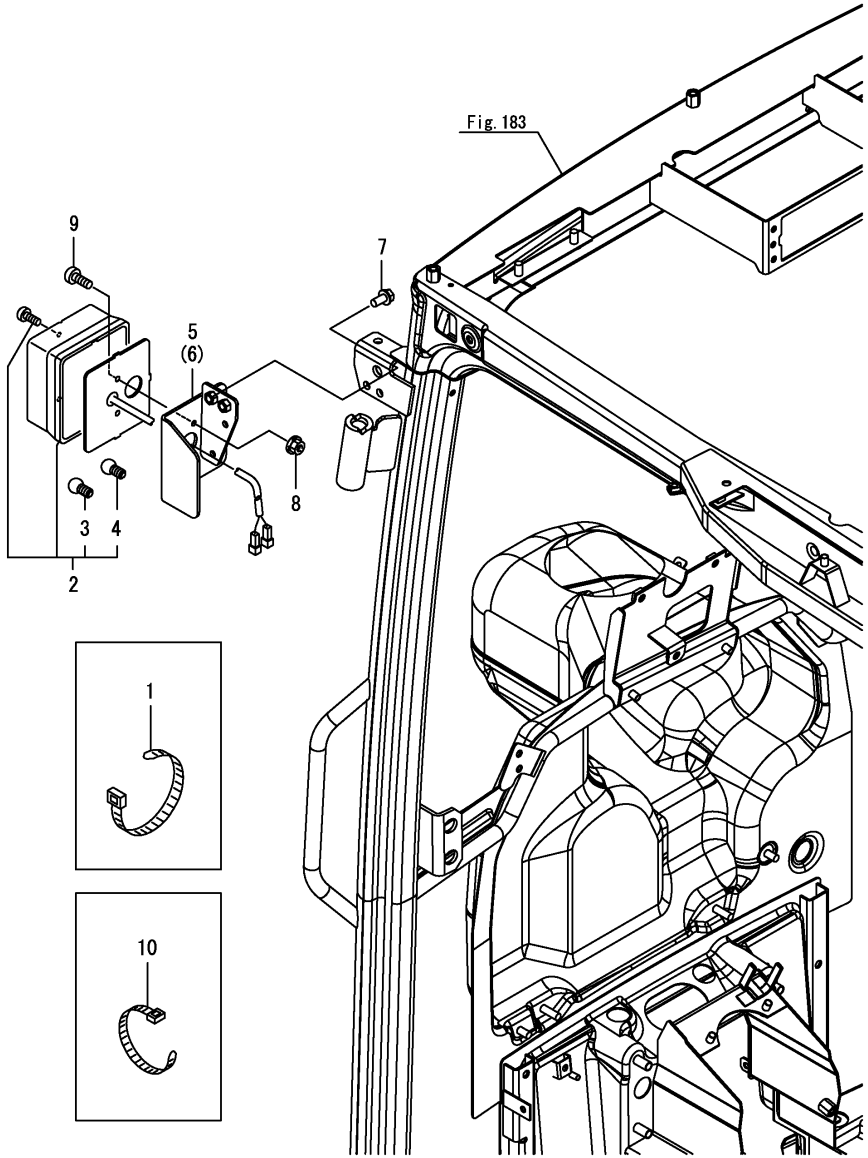

No.	Lev.	Parts No.	Description	Q'ty (A)	(B)	(C)	(D)	(E)	(F)	I	R
1	1	1A8300-51210	BAND, REPEAT	2							
2	1	198280-53400	LAMP, COMBINATION F	2							
3	2	1A7100-53220	BULB, 12VP21W	1							
4	2	1A7100-53230	BULB, 12VR5W	1							
5	1	1A8426-81230	STAY ASSY, LAMP L	1							
6	1	1A8426-81330	STAY ASSY, LAMP R	1							
7	1	26106-080162	BOLT, M8X 16 PLATED	4							
8	1	26557-050122	SCREW, M5X12	4							
9	1	26716-050002	NUT, M5	4							
10	1	29622-140001	BAND, RF140	2							

N:Old $\overset{\text{Yes}}{\underset{\text{No}}{\leftrightarrows}}$ New, Q:Old $\overset{\text{No}}{\underset{\text{Yes}}{\leftrightarrows}}$ New, R:Old $\overset{\text{Yes}}{\underset{\text{Yes}}{\leftrightarrows}}$ New, S:Old $\overset{\text{No}}{\underset{\text{No}}{\leftrightarrows}}$ New, W:Add, Z:Discontinued, F:Interchangeable by set, K:Q'ty Change

Copyright (C) 2017 YANMAR GLOBAL CS CO., LTD. All RightsReserved.

Fig.120. LAMP(FLOOR)(REAR)(CABIN)

(A)=YT235Y, EU
(B)=
(C)=
(D)=
(E)=
(F)=

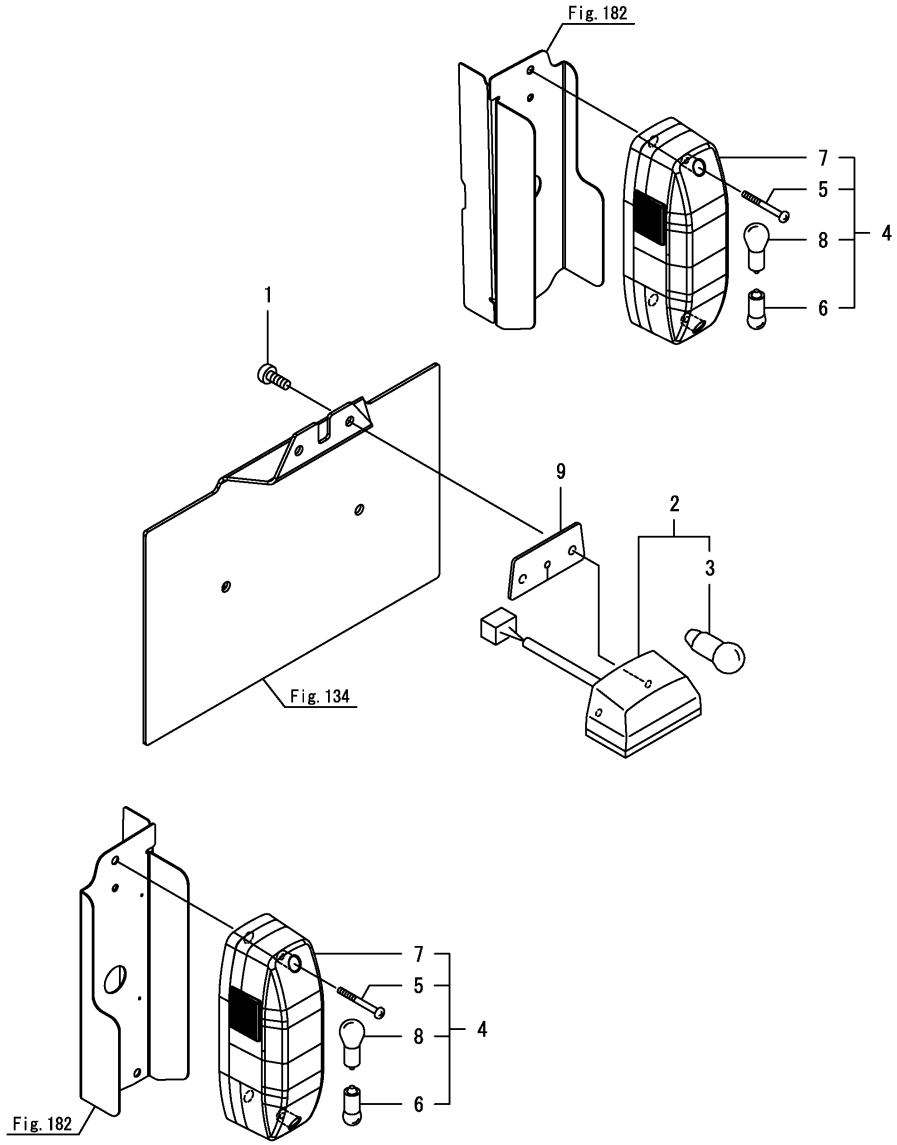

No.	Lev.	Parts No.	Description	Q'ty (A)	(B)	(C)	(D)	(E)	(F)	I	R
1	1	1C6650-37480	SCREW, TAPPING M6X16	2							
2	1	1A7100-53400	LAMP ASSY, LICENSE	1							
3	2	1A7100-53420	BULB, 12VC5W	1							
4	1	1A8043-53600	LAMP ASSY, REAR COMB	2							
5	2	1A8060-53430	SCREW, M5X50	2							
6	2	1A7400-53530	VALVE, 12V21/5W	1							
7	2	1A8043-53640	LENS, RED	1							
8	2	1E9170-81270	BULB, 12V/21W	1							
9	1	198280-53750	SEAL, LAMP	1							

N:Old $\xleftrightarrow[\text{No}]{\text{Yes}}$ New, Q:Old $\xleftrightarrow[\text{Yes}]{\text{No}}$ New, R:Old $\xleftrightarrow[\text{Yes}]{\text{Yes}}$ New, S:Old $\xleftrightarrow[\text{No}]{\text{No}}$ New, W:Add, Z:Discontinued, F:Interchangeable by set, K:Q'ty Change

Copyright (C) 2017 YANMAR GLOBAL CS CO., LTD. All RightsReserved.

Fig.121. ROOM LAMP(CABIN)

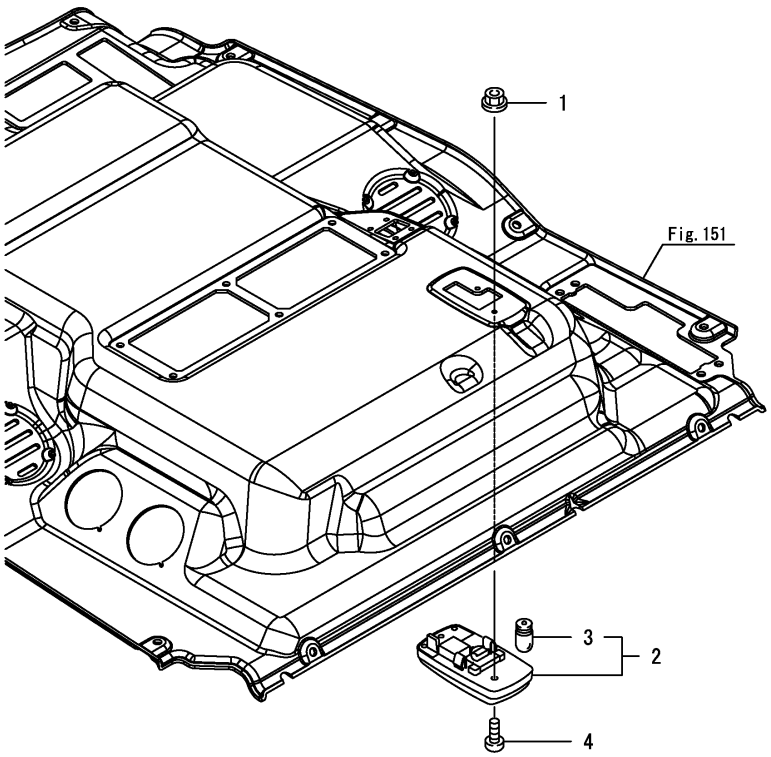

(A)=YT235Y, EU (D)=
(B)= (E)=
(C)= (F)=

No.	Lev.	Parts No.	Description	Q'ty (A)	(B)	(C)	(D)	(E)	(F)	I	R
1	1	194990-22120	NUT, M5	2							
2	1	1A7470-86750	LAMP ASSY, ROOM	1							
3	2	1A7470-86770	BULB, 12V/5W	1							
4	1	26557-050202	SCREW, M5X20	2							

N:Old $\xleftrightarrow[\text{No}]{\text{Yes}}$ New, Q:Old $\xleftrightarrow[\text{Yes}]{\text{No}}$ New, R:Old $\xleftrightarrow[\text{Yes}]{\text{Yes}}$ New, S:Old $\xleftrightarrow[\text{No}]{\text{No}}$ New, W:Add, Z:Discontinued, F:Interchangeable by set, K:Q'ty Change

Copyright (C) 2017 YANMAR GLOBAL CS CO., LTD. All RightsReserved.

Fig.122. LAMP(FLOOR)(REAR)

(A)=YT235Y, EU
(B)=
(C)=
(D)=
(E)=
(F)=

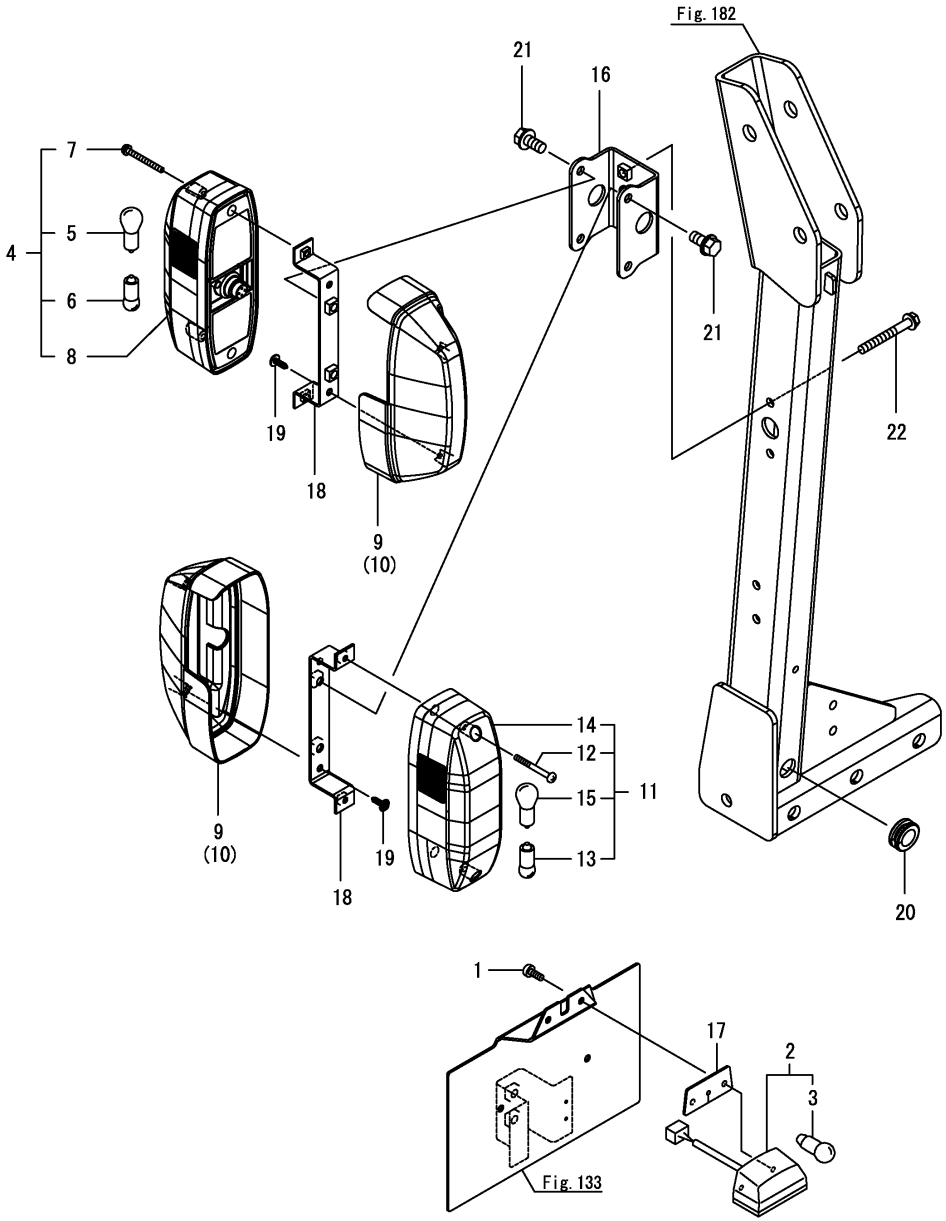

No.	Lev.	Parts No.	Description	Q'ty (A)	(B)	(C)	(D)	(E)	(F)	I	R
1	1	1C6650-37480	SCREW, TAPPING M6X16	2							
2	1	1A7100-53400	LAMP ASSY, LICENSE	1							
3	2	1A7100-53420	BULB, 12VC5W	1							
4	1	1A8060-53400	LAMP ASSY, FRONT	2							
5	2	1A8060-53410	BULB, 12V21W	1							
6	2	1A8060-53420	BULB, 12V5W	1							
7	2	1A8060-53430	SCREW, M5X50	2							
8	2	1A8060-53440	LENS, AMBER	1							
9	1	1A8470-53450	COVER, LAMP A	2							
10	1	1A8470-53460	COVER, LAMP B	2							
11	1	1A8043-53600	LAMP ASSY, REAR COMB	2							
12	2	1A8060-53430	SCREW, M5X50	2							
13	2	1A7400-53530	VALVE, 12V21/5W	1							
14	2	1A8043-53640	LENS, RED	1							
15	2	1E9170-81270	BULB, 12V/21W	1							
16	1	1A8406-53710	STAY ASSY, LAMP	2							
17	1	198280-53750	SEAL, LAMP	1							
18	1	1A8470-53850	STAY ASSY,LANP COVER	4							
19	1	194940-61790	SCREW, TAPPING M5X16	8							
20	1	1A8060-88931	GROMMET, HOSE	2							
21	1	26106-080162	BOLT, M8X 16 PLATED	8							
22	1	26106-080652	BOLT, M8X 65 PLATED	4							

N:Old ◄Yes/No► New, Q:Old ◄No/Yes► New, R:Old ◄Yes/Yes► New, S:Old ◄No/No► New, W:Add, Z:Discontinued, F:Interchangeable by set, K:Q'ty Change

Copyright (C) 2017 YANMAR GLOBAL CS CO., LTD. All RightsReserved.

Fig.123. REFLECTOR

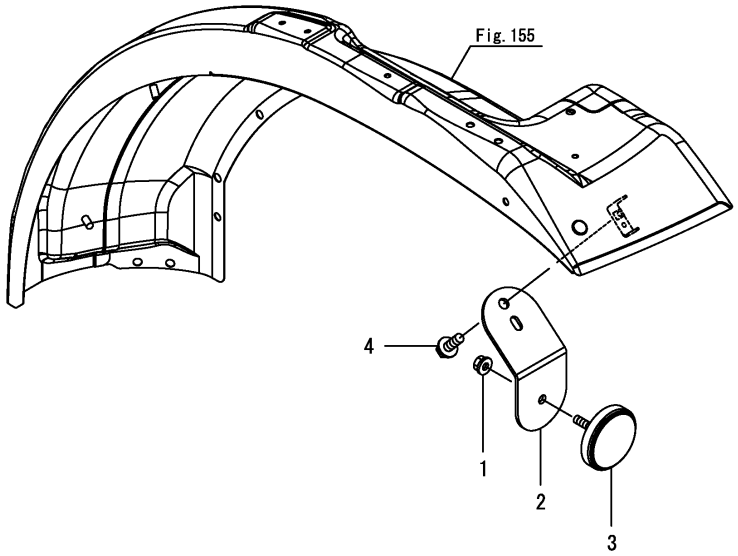

(A)=YT235Y, EU (D)=
(B)= (E)=
(C)= (F)=

No.	Lev.	Parts No.	Description	Q'ty (A)	(B)	(C)	(D)	(E)	(F)	I	R
1	1	194990-22120	NUT, M5	2							
2	1	1A8476-62190	STAY, REFLECTOR B	2							
3	1	1A6481-62650	REFLECTOR	2							
4	1	26106-060162	BOLT, M6X 16 PLATED	2							

N:Old $\xleftrightarrow[\text{No}]{\text{Yes}}$ New, Q:Old $\xleftrightarrow[\text{Yes}]{\text{No}}$ New, R:Old $\xleftrightarrow[\text{Yes}]{\text{Yes}}$ New, S:Old $\xleftrightarrow[\text{No}]{\text{No}}$ New, W:Add, Z:Discontinued, F:Interchangeable by set, K:Q'ty Change

Copyright (C) 2017 YANMAR GLOBAL CS CO., LTD. All RightsReserved.

Fig.124. HEAD LAMP

(A)=YT235Y, EU
(B)=
(C)=
(D)=
(E)=
(F)=

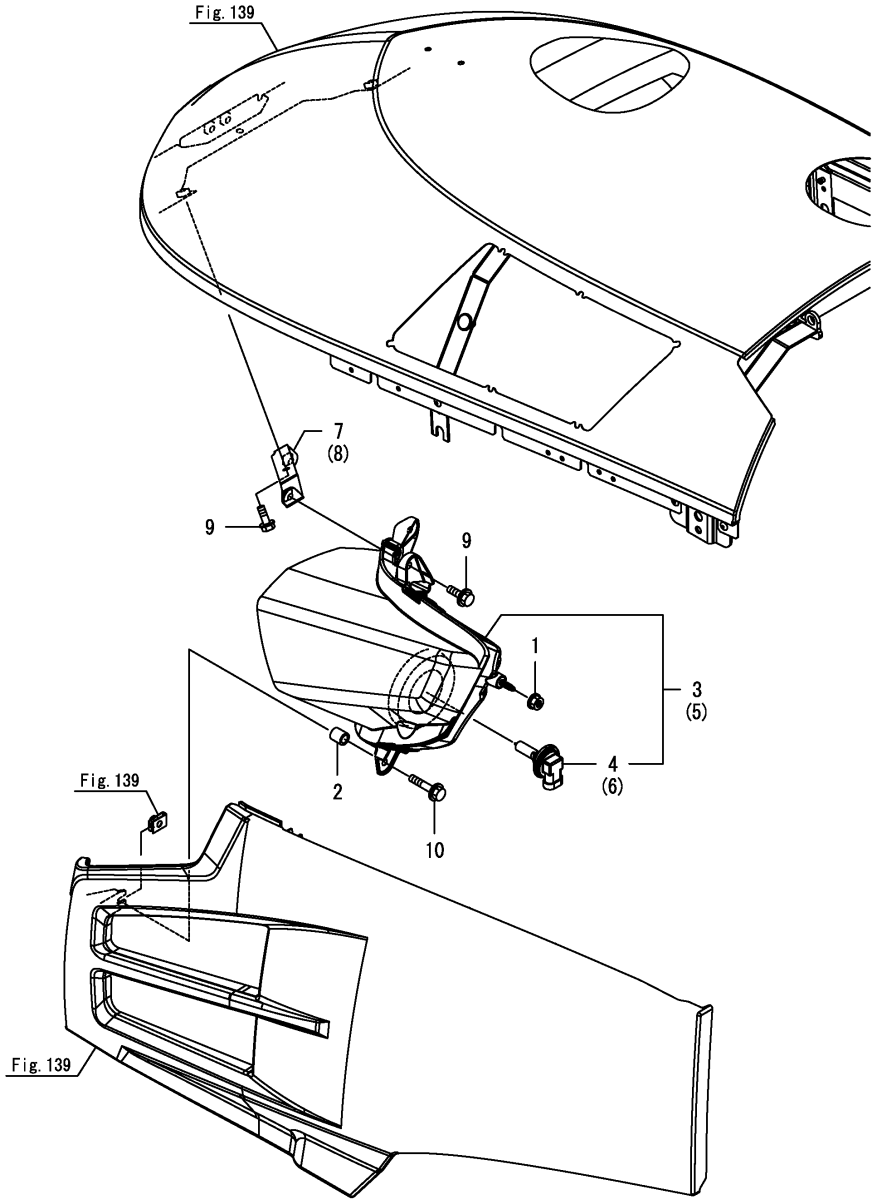

No.	Lev.	Parts No.	Description	Q'ty (A)	(B)	(C)	(D)	(E)	(F)	I	R
1	1	194990-22130	NUT, M6	2							
2	1	198234-48650	SPACER	2							
3	1	1A8400-53101	HEADLAMP ASSY, L	1							
4	2	1A8070-53140	BULB, 12V/35W	1							
5	1	1A8400-53201	HEADLAMP ASSY, R	1							
6	2	1A8070-53140	BULB, 12V/35W	1							
7	1	1A8470-61510	STAY ASSY, LAMP L	1							
8	1	1A8470-61520	STAY ASSY, LAMP R	1							
9	1	26106-060162	BOLT, M6X 16 PLATED	6							
10	1	26106-060302	BOLT, M6X 30 PLATED	2							

N:Old $\overset{\text{Yes}}{\underset{\text{No}}{\leftrightarrows}}$ New, Q:Old $\overset{\text{No}}{\underset{\text{Yes}}{\leftrightarrows}}$ New, R:Old $\overset{\text{Yes}}{\underset{\text{Yes}}{\leftrightarrows}}$ New, S:Old $\overset{\text{No}}{\underset{\text{No}}{\leftrightarrows}}$ New, W:Add, Z:Discontinued, F:Interchangeable by set, K:Q'ty Change

Copyright (C) 2017 YANMAR GLOBAL CS CO., LTD. All RightsReserved.

Fig.125. LAMP(PARKING BRAKE)

(A)=YT235Y, EU
(B)=
(C)=
(D)=
(E)=
(F)=

No.	Lev.	Parts No.	Description	Q'ty (A)	(B)	(C)	(D)	(E)	(F)	I	R
1	1	1C6980-07210	LAMP, PILOT LED	1							
2	1	1A8476-58050	STAY ASSY,	1							
3	1	1A8476-58100	BASE, LAMP	1							
4	1	1A8476-58110	STAY ASSY,	1							
5	1	194940-61790	SCREW, TAPPING M5X16	2							
6	1	1E9265-84300	CLIP, BAND	1							
7	1	22857-500100	SCREW, 5X10	2							
8	1	26106-060122	BOLT, M6X 12 PLATED	2							
9	1	29311-092000	GROMET, 8.5X2	1							

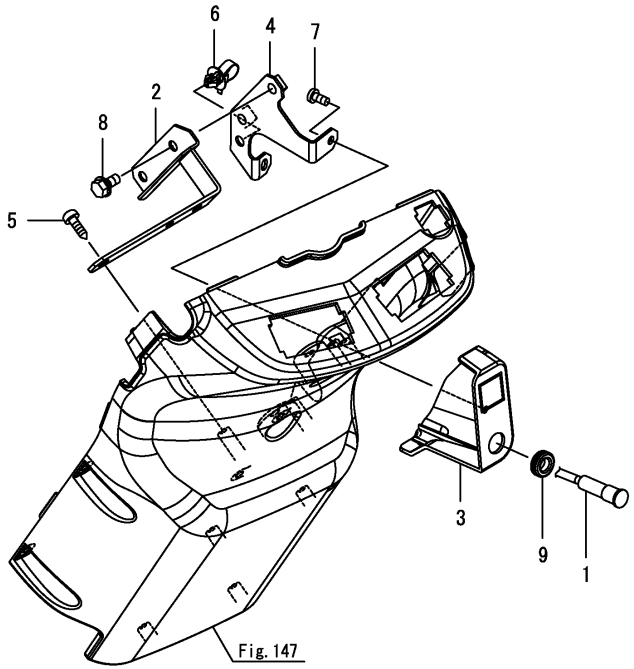

N:Old $\xleftarrow[\text{No}]{\text{Yes}}$ New, Q:Old $\xleftarrow[\text{Yes}]{\text{No}}$ New, R:Old $\xleftarrow[\text{Yes}]{\text{Yes}}$ New, S:Old $\xleftarrow[\text{No}]{\text{No}}$ New, W:Add, Z:Discontinued, F:Interchangeable by set, K:Q'ty Change

Copyright (C) 2017 YANMAR GLOBAL CS CO., LTD. All RightsReserved.

Fig.126. METER

(A)=YT235Y, EU
(B)=
(C)=
(D)=
(E)=
(F)=

No.	Lev.	Parts No.	Description	Q'ty (A)	(B)	(C)	(D)	(E)	(F)	I	R
1	1	1A8405-56002	METER ASSY, COMBINA.	1							1
2	1	194940-61790	SCREW, TAPPING M5X16	4							
3	1	1A8405-56902	METER ASSY, SERVICE	1							2

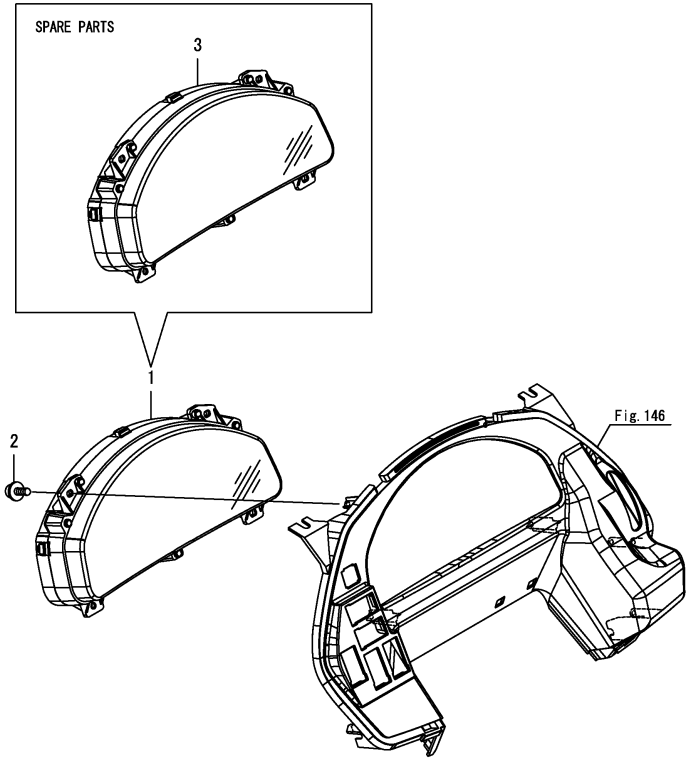

Remarks
(1)Eco Meter
This part cannot be ordered.
Replace the part using a Service Meter with the proper tractor information installed.
(2)Service Meter
If the proper information is not installed, the tractor will not operate.
To install proper information, go to an authorized distributor.

N:Old ◄Yes/No► New, Q:Old ◄No/Yes► New, R:Old ◄Yes/Yes► New, S:Old ◄No/No► New, W:Add, Z:Discontinued, F:Interchangeable by set, K:Q'ty Change

Copyright (C) 2017 YANMAR GLOBAL CS CO., LTD. All RightsReserved.

Fig.127. HORN

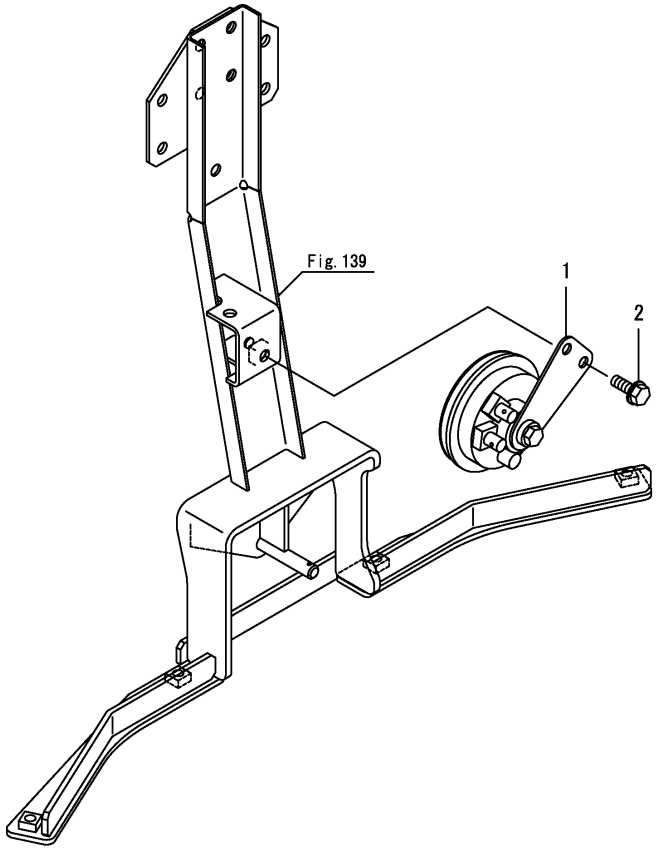

(A)=YT235Y, EU
(B)=
(C)=
(D)=
(E)=
(F)=

No.	Lev.	Parts No.	Description	Q'ty (A)	(B)	(C)	(D)	(E)	(F)	I	R
1	1	1C7100-08151	HORN ASSY	1							
2	1	26106-060162	BOLT, M6X 16 PLATED	1							

N:Old ◄Yes/No► New, Q:Old ◄No/Yes► New, R:Old ◄Yes/Yes► New, S:Old ◄No/No► New, W:Add, Z:Discontinued, F:Interchangeable by set, K:Q'ty Change

Copyright (C) 2017 YANMAR GLOBAL CS CO., LTD. All RightsReserved.

Fig.128. BACK BUZZER

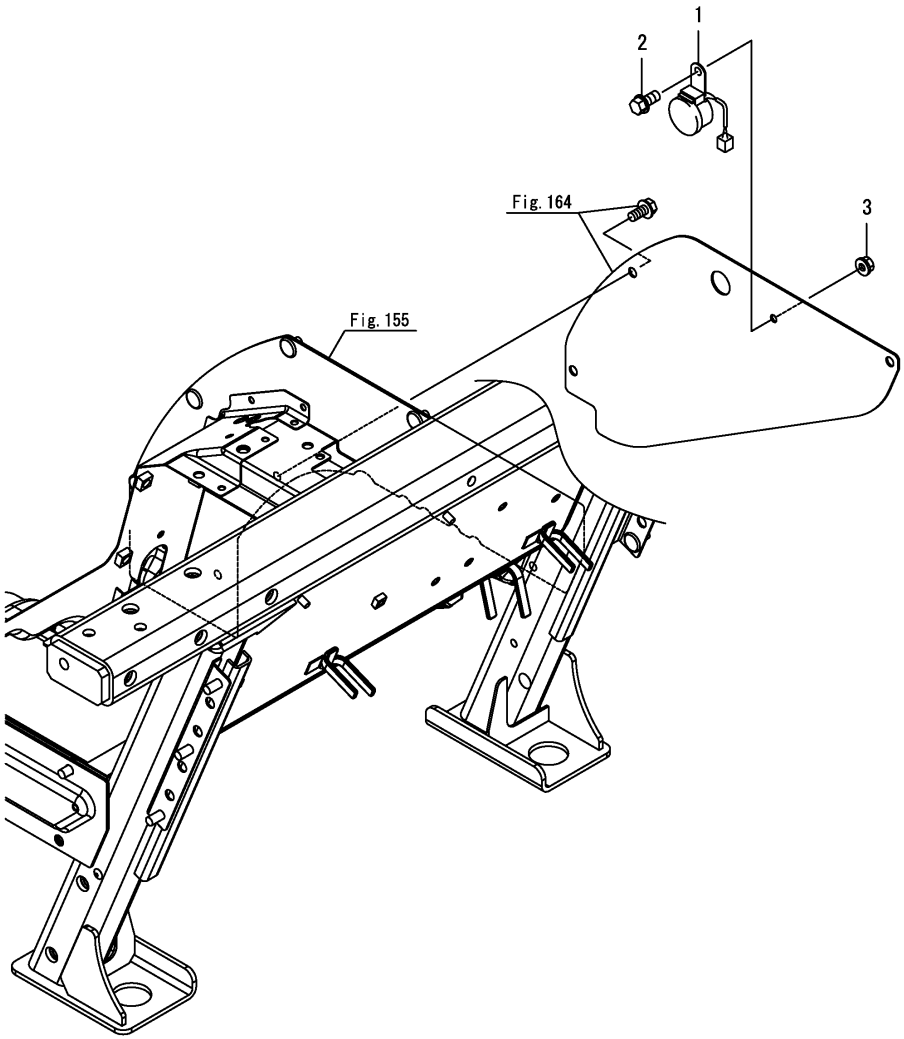

(A)=YT235Y, EU
(B)=
(C)=
(D)=
(E)=
(F)=

No.	Lev.	Parts No.	Description	Q'ty (A)	(B)	(C)	(D)	(E)	(F)	I	R
1	1	174570-57110	BUZZER, ALARM	1							
2	1	26106-060122	BOLT, M6X 12 PLATED	1							
3	1	26716-060002	NUT, M6	1							

N:Old $\xleftrightarrow[\text{No}]{\text{Yes}}$ New, Q:Old $\xleftrightarrow[\text{Yes}]{\text{No}}$ New, R:Old $\xleftrightarrow[\text{Yes}]{\text{Yes}}$ New, S:Old $\xleftrightarrow[\text{No}]{\text{No}}$ New, W:Add, Z:Discontinued, F:Interchangeable by set, K:Q'ty Change

Copyright (C) 2017 YANMAR GLOBAL CS CO., LTD. All RightsReserved.

Fig.129. RELAY(ENGINE)

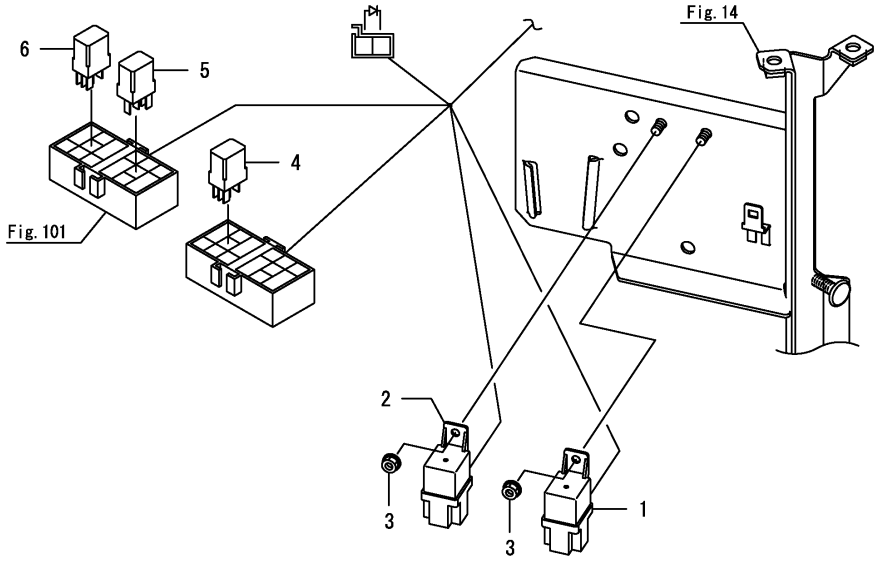

(A)=YT235Y, EU
(B)=
(C)=
(D)=
(E)=
(F)=

No.	Lev.	Parts No.	Description	Q'ty (A)	(B)	(C)	(D)	(E)	(F)	I	R
1	1	172B16-17190	RELAY, CB TYPE C	1							
2	1	172B16-17190	RELAY, CB TYPE C	1							
3	1	194990-22120	NUT, M5	2							
4	1	1A7522-52950	RELAY, ACM13221M19	1							
5	1	1A7522-52950	RELAY, ACM13221M19	1							
6	1	1A7522-52950	RELAY, ACM13221M19	1							

N:Old $\overset{\text{Yes}}{\underset{\text{No}}{\leftrightarrows}}$ New, Q:Old $\overset{\text{No}}{\underset{\text{Yes}}{\leftrightarrows}}$ New, R:Old $\overset{\text{Yes}}{\underset{\text{Yes}}{\leftrightarrows}}$ New, S:Old $\overset{\text{No}}{\underset{\text{No}}{\leftrightarrows}}$ New, W:Add, Z:Discontinued, F:Interchangeable by set, K:Q'ty Change

Copyright (C) 2017 YANMAR GLOBAL CS CO., LTD. All RightsReserved.

Fig.130. RELAY(ENGINE)(CABIN)

(A)=YT235Y, EU
(B)=
(C)=
(D)=
(E)=
(F)=

No.	Lev.	Parts No.	Description	Q'ty (A)	(B)	(C)	(D)	(E)	(F)	I	R
1	1	172B16-17190	RELAY, CB TYPE C	1							
2	1	172B16-17190	RELAY, CB TYPE C	1							
3	1	194990-22120	NUT, M5	2							
4	1	1A7522-52950	RELAY, ACM13221M19	1							
5	1	1A7522-52950	RELAY, ACM13221M19	1							
6	1	1A7522-52950	RELAY, ACM13221M19	1							

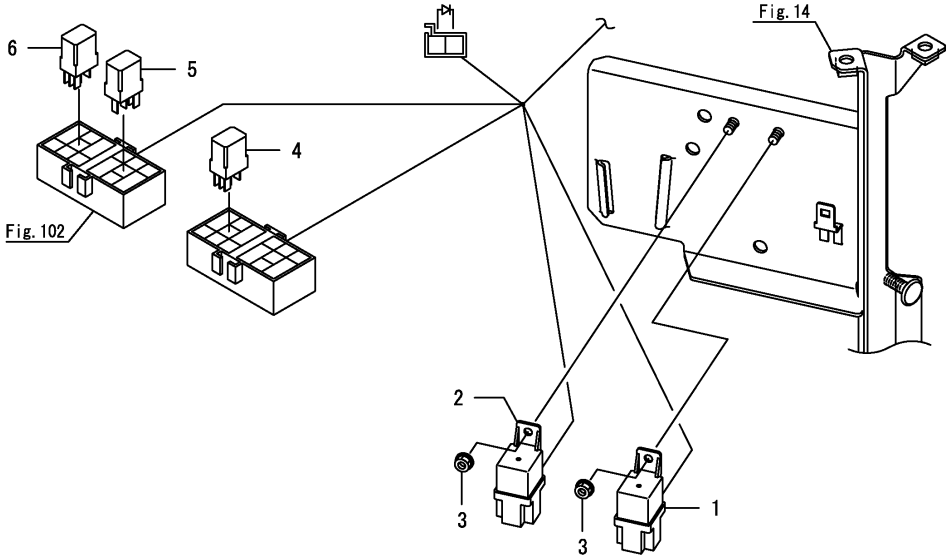

N:Old $\xleftarrow[\text{No}]{\text{Yes}}$ New, Q:Old $\xleftarrow[\text{Yes}]{\text{No}}$ New, R:Old $\xleftarrow[\text{Yes}]{\text{Yes}}$ New, S:Old $\xleftarrow[\text{No}]{\text{No}}$ New, W:Add, Z:Discontinued, F:Interchangeable by set, K:Q'ty Change

Copyright (C) 2017 YANMAR GLOBAL CS CO., LTD. All RightsReserved.

Fig.131. RELAY(CABIN)

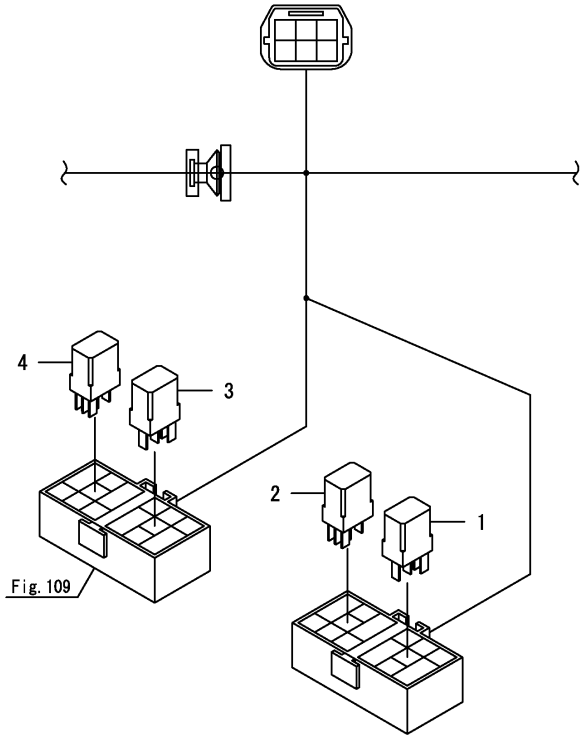

(A)=YT235Y, EU
(B)=
(C)=
(D)=
(E)=
(F)=

No.	Lev.	Parts No.	Description	Q'ty (A)	(B)	(C)	(D)	(E)	(F)	I	R
1	1	1A7522-52950	RELAY, ACM13221M19	1							
2	1	1A7522-52950	RELAY, ACM13221M19	1							
3	1	1A7522-52950	RELAY, ACM13221M19	1							
4	1	1A7522-52950	RELAY, ACM13221M19	1							

N:Old $\xleftrightarrow[\text{No}]{\text{Yes}}$ New, Q:Old $\xleftrightarrow[\text{Yes}]{\text{No}}$ New, R:Old $\xleftrightarrow[\text{Yes}]{\text{Yes}}$ New, S:Old $\xleftrightarrow[\text{No}]{\text{No}}$ New, W:Add, Z:Discontinued, F:Interchangeable by set, K:Q'ty Change

Copyright (C) 2017 YANMAR GLOBAL CS CO., LTD. All RightsReserved.

Fig.132. RELAY(FLOOR)

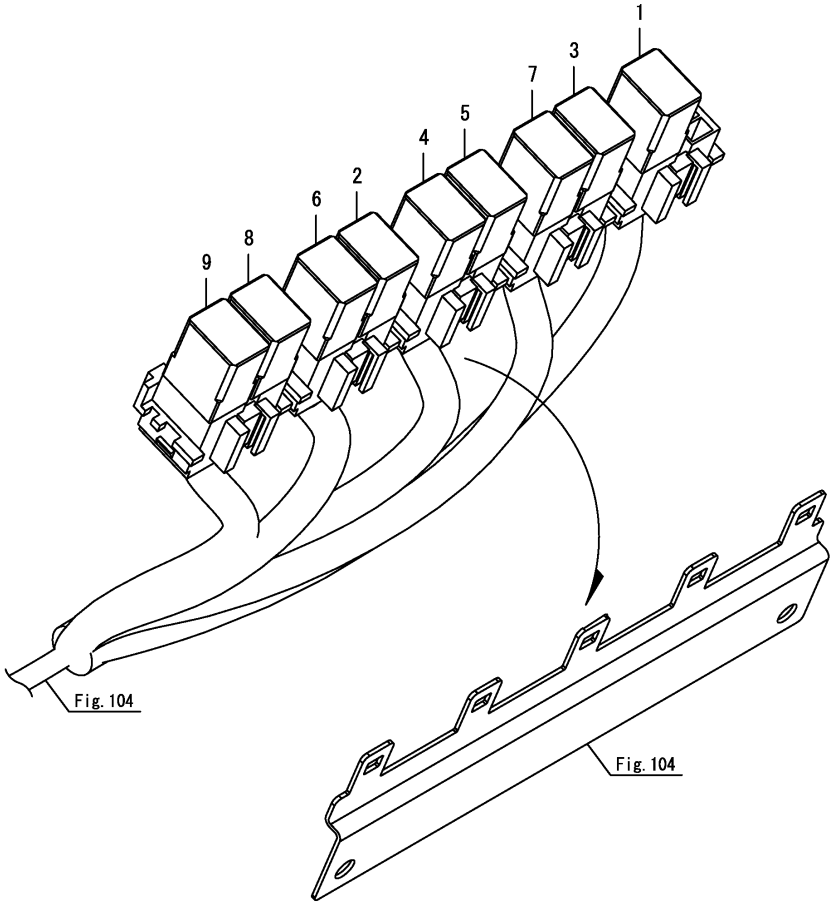

(A)=YT235Y, EU
(B)=
(C)=
(D)=
(E)=
(F)=

No.	Lev.	Parts No.	Description	Q'ty (A)	(B)	(C)	(D)	(E)	(F)	I	R
1	1	1A7522-52950	RELAY, ACM13221M19	1							
2	1	1A7522-52950	RELAY, ACM13221M19	1							
3	1	1A7522-52950	RELAY, ACM13221M19	1							
4	1	1A7522-52950	RELAY, ACM13221M19	1							
5	1	1A7522-52950	RELAY, ACM13221M19	1							
6	1	1A7522-52950	RELAY, ACM13221M19	1							
7	1	1A7522-52950	RELAY, ACM13221M19	1							
8	1	1A7522-52950	RELAY, ACM13221M19	1							
9	1	1A7522-52950	RELAY, ACM13221M19	1							

N:Old $\xleftarrow[\text{No}]{\text{Yes}}$ New, Q:Old $\xleftarrow[\text{Yes}]{\text{No}}$ New, R:Old $\xleftarrow[\text{Yes}]{\text{Yes}}$ New, S:Old $\xleftarrow[\text{No}]{\text{No}}$ New, W:Add, Z:Discontinued, F:Interchangeable by set, K:Q'ty Change

Copyright (C) 2017 YANMAR GLOBAL CS CO., LTD. All RightsReserved.

Fig.133. BRACKET(LICENCE)

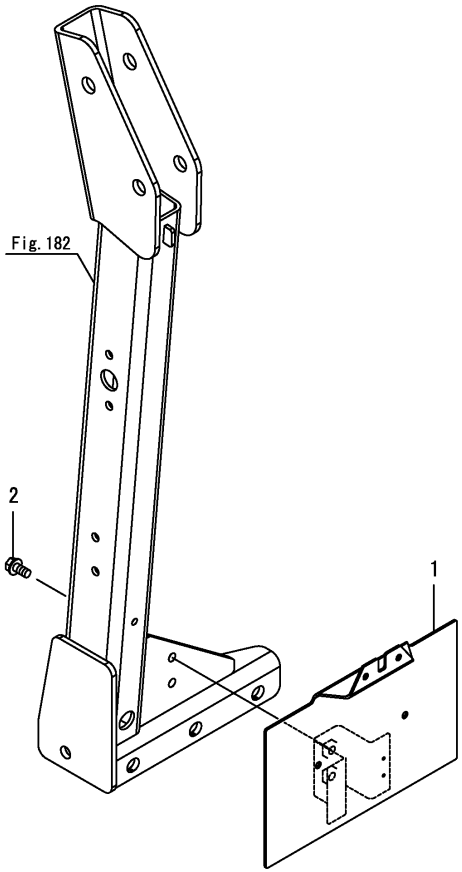

(A)=YT235Y, EU
(B)=
(C)=
(D)=
(E)=
(F)=

No.	Lev.	Parts No.	Description	Q'ty (A)	(B)	(C)	(D)	(E)	(F)	I	R
1	1	1A8406-58270	BRACKET ASSY,LICENCE	1							
2	1	26106-080162	BOLT, M8X 16 PLATED	2							

N:Old $\xleftarrow[\text{No}]{\text{Yes}}$ New, Q:Old $\xleftarrow[\text{Yes}]{\text{No}}$ New, R:Old $\xleftarrow[\text{Yes}]{\text{Yes}}$ New, S:Old $\xleftarrow[\text{No}]{\text{No}}$ New, W:Add, Z:Discontinued, F:Interchangeable by set, K:Q'ty Change

Copyright (C) 2017 YANMAR GLOBAL CS CO., LTD. All RightsReserved.

Fig.134. BRACKET(LICENCE)(CABIN)

(A)=YT235Y, EU
(B)=
(C)=
(D)=
(E)=
(F)=

No.	Lev.	Parts No.	Description	Q'ty (A)	(B)	(C)	(D)	(E)	(F)	I	R
1	1	1A8426-58260	STAY,LICENCE	1							
2	1	1A8406-58270	BRACKET ASSY,LICENCE	1							
3	1	26106-080162	BOLT, M8X 16 PLATED	2							

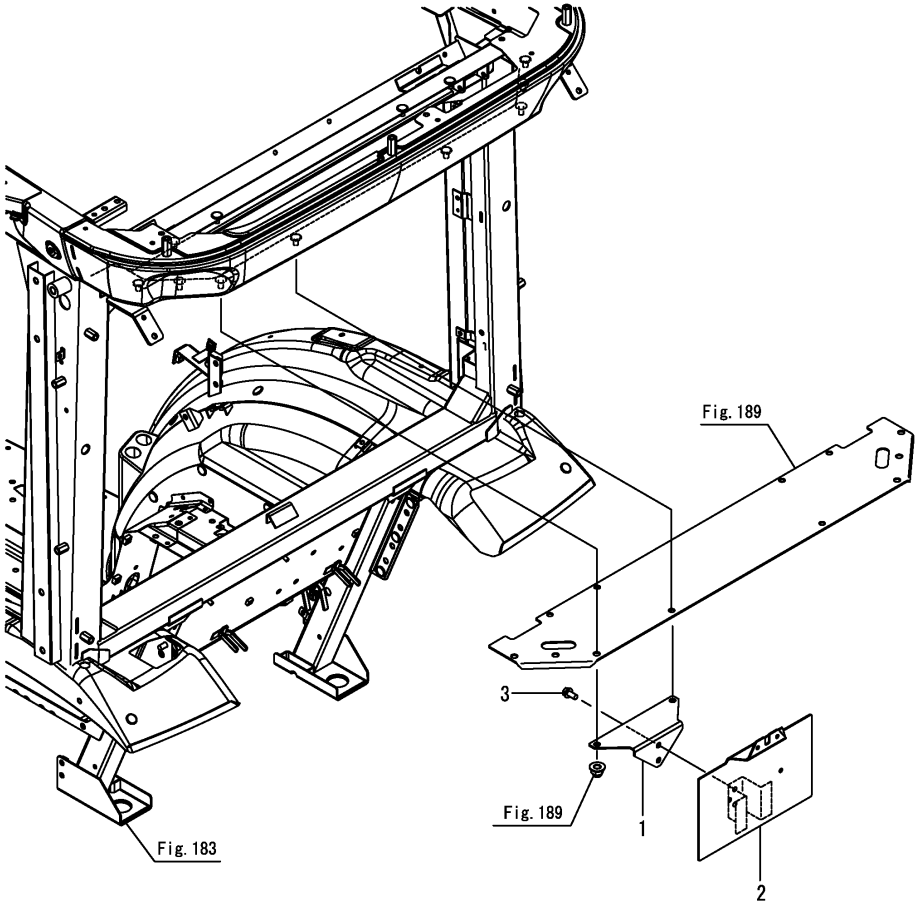

N:Old $\frac{\text{Yes}}{\text{No}}$ New, Q:Old $\frac{\text{No}}{\text{Yes}}$ New, R:Old $\frac{\text{Yes}}{\text{Yes}}$ New, S:Old $\frac{\text{No}}{\text{No}}$ New, W:Add, Z:Discontinued, F:Interchangeable by set, K:Q'ty Change

Copyright (C) 2017 YANMAR GLOBAL CS CO., LTD. All RightsReserved.

Fig.135. POWER SUPPLY SOCKET

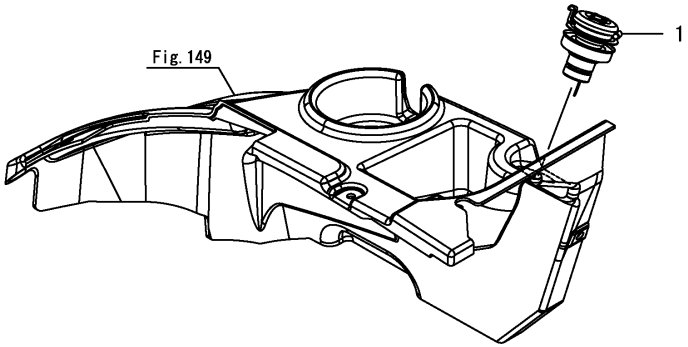

(A)=YT235Y, EU
(B)=
(C)=
(D)=
(E)=
(F)=

No.	Lev.	Parts No.	Description	Q'ty (A)	(B)	(C)	(D)	(E)	(F)	I	R
1	1	1D4270-17650	SOCKET, POWER	1							

N:Old $\xleftrightarrow[\text{No}]{\text{Yes}}$ New, Q:Old $\xleftrightarrow[\text{Yes}]{\text{No}}$ New, R:Old $\xleftrightarrow[\text{Yes}]{\text{Yes}}$ New, S:Old $\xleftrightarrow[\text{No}]{\text{No}}$ New, W:Add, Z:Discontinued, F:Interchangeable by set, K:Q'ty Change

Copyright (C) 2017 YANMAR GLOBAL CS CO., LTD. All RightsReserved.

Fig.136. FRONT FRAME

(A)=YT235Y, EU
(B)=
(C)=
(D)=
(E)=
(F)=

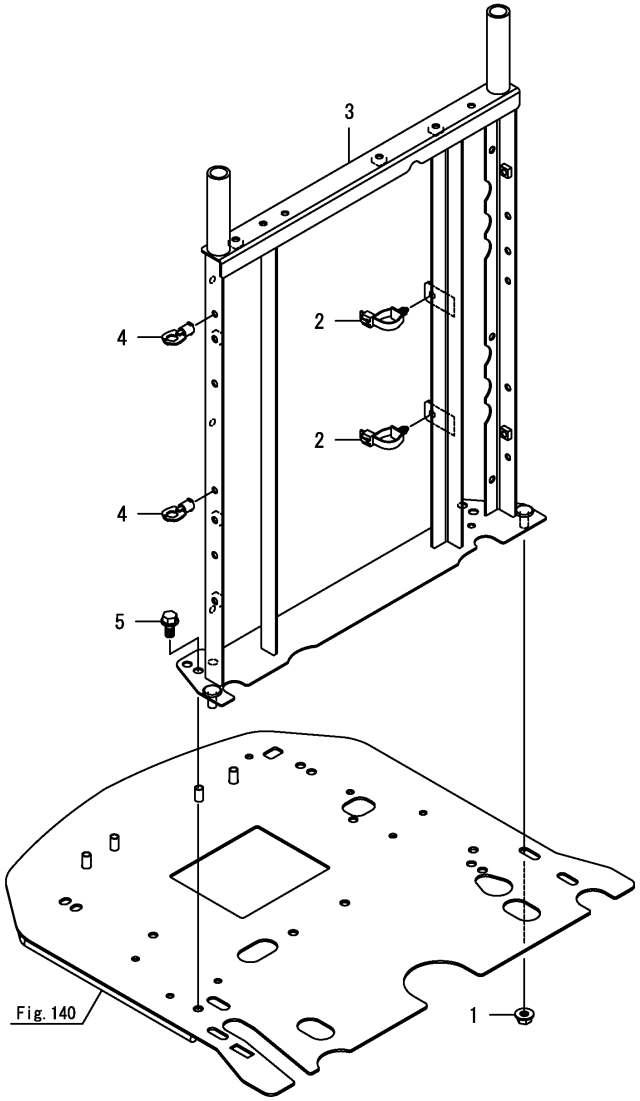

No.	Lev.	Parts No.	Description	Q'ty (A)	(B)	(C)	(D)	(E)	(F)	I	R
1	1	194990-22140	NUT, M8	2							
2	1	1A8275-51670	CLIP, M8 HOLE	2							
3	1	1A8425-60092	FRAME ASSY, FRONT	1							
4	1	198220-61351	LOCK ASSY, CAM	2							
5	1	26106-080162	BOLT, M8X 16 PLATED	2							

N:Old ◄Yes/No► New, Q:Old ◄No/Yes► New, R:Old ◄Yes/Yes► New, S:Old ◄No/No► New, W:Add, Z:Discontinued, F:Interchangeable by set, K:Q'ty Change

Copyright (C) 2017 YANMAR GLOBAL CS CO., LTD. All RightsReserved.

Fig.137. FRONT FRAME(CABIN)

(A)=YT235Y, EU
(B)=
(C)=
(D)=
(E)=
(F)=

No.	Lev.	Parts No.	Description	Q'ty (A)	(B)	(C)	(D)	(E)	(F)	I	R
1	1	194990-22140	NUT, M8	2							
2	1	1A8275-51670	CLIP, M8 HOLE	2							
3	1	1A8420-60102	FRAME ASSY, FRONT	1							
4	1	198220-61351	LOCK ASSY, CAM	2							
5	1	26106-080162	BOLT, M8X 16 PLATED	2							

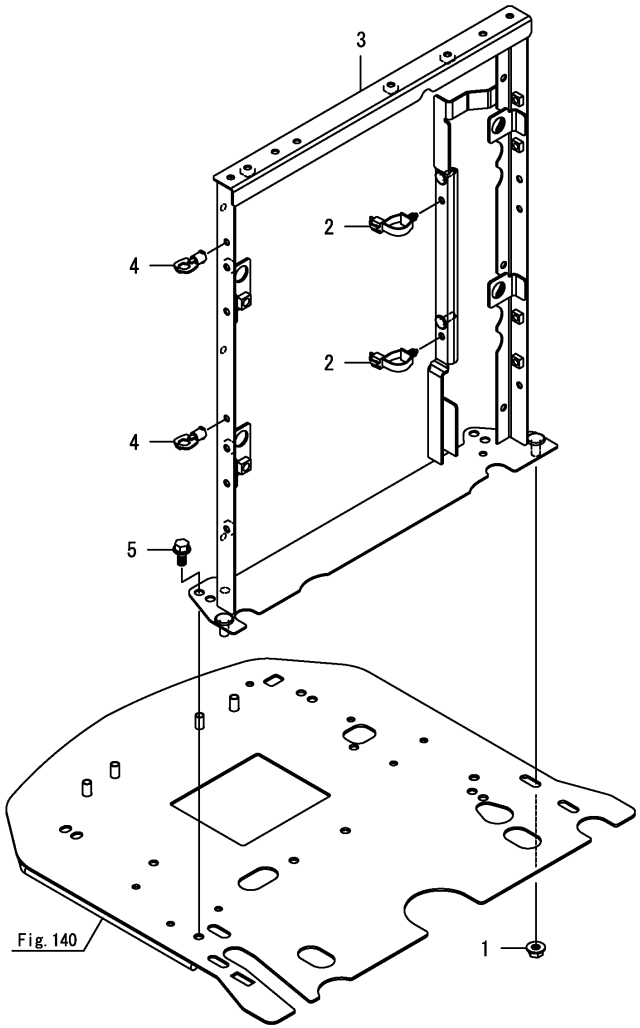

N:Old $\xleftarrow[\text{No}]{\text{Yes}}$ New, Q:Old $\xleftarrow[\text{Yes}]{\text{No}}$ New, R:Old $\xleftarrow[\text{Yes}]{\text{Yes}}$ New, S:Old $\xleftarrow[\text{No}]{\text{No}}$ New, W:Add, Z:Discontinued, F:Interchangeable by set, K:Q'ty Change

Copyright (C) 2017 YANMAR GLOBAL CS CO., LTD. All RightsReserved.

Fig.138. REAR FRAME

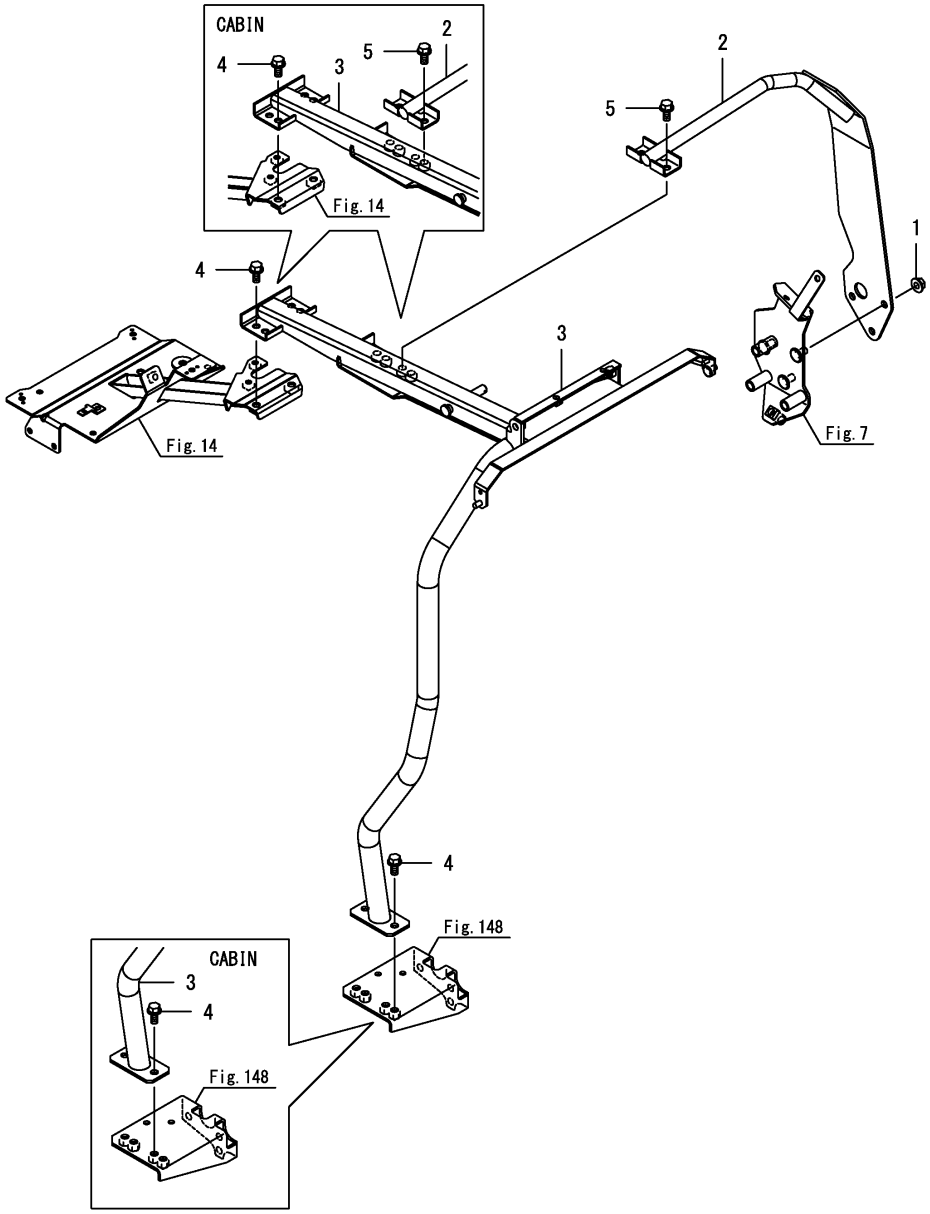

(A)=YT235Y, EU (D)=
(B)= (E)=
(C)= (F)=

No.	Lev.	Parts No.	Description	Q'ty (A)	(B)	(C)	(D)	(E)	(F)	I	R
1	1	194990-22140	NUT, M8	3							
2	1	1A8420-60600	SUPPORT ASSY, HINGE	1							
3	1	1A8420-60802	FRAME ASSY, CONNECT	1							
4	1	26106-080162	BOLT, M8X 16 PLATED	4							
5	1	26106-080162	BOLT, M8X 16 PLATED	2							

N:Old ←Yes/No→ New, Q:Old ←No/Yes→ New, R:Old ←Yes/Yes→ New, S:Old ←No/No→ New, W:Add, Z:Discontinued, F:Interchangeable by set, K:Q'ty Change

Copyright (C) 2017 YANMAR GLOBAL CS CO., LTD. All RightsReserved.

Fig.139. BONNET

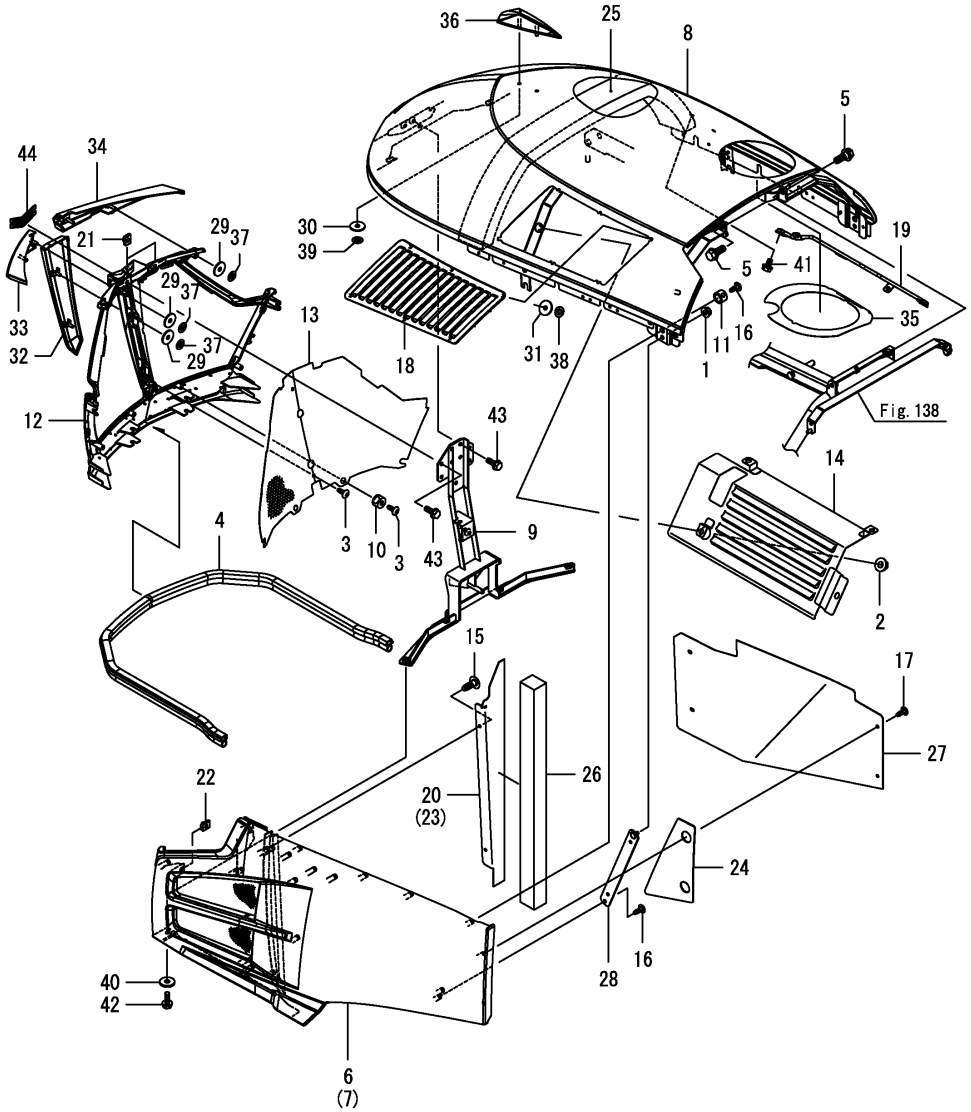

(A)=YT235Y, EU (D)=
(B)= (E)=
(C)= (F)=

No.	Lev.	Parts No.	Description	Q'ty (A)	(B)	(C)	(D)	(E)	(F)	I	R
1	1	194990-22130	NUT, M6	2							
2	1	194990-22140	NUT, M8	4							
3	1	1A8470-51950	BOLT, TAPPING M5X16	6							
4	1	1A7870-60750	WEATHER-STRIP, 1200	1							
5	1	1A8400-60961	BOLT, STEPPED M8	2							
6	1	1A8420-61011	BONNET ASSY, LOWER L	1							
7	1	1A8420-61021	BONNET ASSY, LOWER R	1							
8	1	1A8425-61071	M ASSY,BONNET UP	1							
8-1	1	1A8425-61072	M ASSY,BONNET UP	1						N	
	(A=F100368)										
9	1	1A8400-61210	STAY ASSY, FRONT	1							
9-1	1	1A8400-61211	STAY ASSY, FRONT	1						N	
	(A=F100368)										
10	1	1A8070-61330	COLLAR, 10X15X10	4							
11	1	1A8070-61330	COLLAR, 10X15X10	10							
12	1	1A8420-61341	FRAME ASSY, GRILLE	1							
13	1	1A8400-61411	SCREEN, GRILLE	1							
14	1	1A8420-61600	INSULATOR ASSY,UPPER	1							
15	1	1A7180-61780	SCREW, TAPPING M5X14	4							
16	1	1A7180-61780	SCREW, TAPPING M5X14	16							
17	1	1A7180-61780	SCREW, TAPPING M5X14	4							
18	1	1A8420-61820	DUCT, SIDE	1							
19	1	1A8420-61852	STAY, BONNET	1							
20	1	1A8420-61881	PLATE, SEAL L	1							
21	1	198071-61890	NUT, SPEED M6	2							
22	1	198071-61890	NUT, SPEED M6	2							
23	1	1A8420-61891	PLATE, SEAL R	1							
24	1	1A8420-61910	HEAT INSULATOR,LOWER	1							
25	1	1A8400-61920	URETHANE, HOOD UPPER	1							
26	1	1A8420-61930	URETHANE, HOOD LOWER	2							
27	1	1A8420-61941	INSULATOR, LOWER	1							
28	1	1A8400-61960	STAY ASSY, SIDE	2							
29	1	194555-65130	CUSHION	6							
30	1	194555-65130	CUSHION	2							
31	1	194555-65130	CUSHION	6							
32	1	1A8400-65150	BAR, Y	1							
33	1	1A8470-65160	BAR, YL	1							
34	1	1A8470-65170	BAR, YR	1							
35	1	1A8400-65280	LABEL, PROTECTION	1							
36	1	1A8470-65590	MARK, TOP	1							
37	1	198071-65610	NUT, SPEED M5	6							
38	1	198071-65610	NUT, SPEED M5	6							
39	1	198071-65610	NUT, SPEED M5	2							
40	1	22157-060000	WASHER, 6	4							
41	1	26106-060102	BOLT, M6X 10 PLATED	2							
42	1	26106-060162	BOLT, M6X 16 PLATED	4							
43	1	26106-060162	BOLT, M6X 16 PLATED	4							
44	1	41801-110041	EMBLEM, FY S 04	1							

N:Old $\overset{\text{Yes}}{\underset{\text{No}}{\leftrightarrow}}$ New, Q:Old $\overset{\text{No}}{\underset{\text{Yes}}{\leftrightarrow}}$ New, R:Old $\overset{\text{Yes}}{\underset{\text{Yes}}{\leftrightarrow}}$ New, S:Old $\overset{\text{No}}{\underset{\text{No}}{\leftrightarrow}}$ New, W:Add, Z:Discontinued, F:Interchangeable by set, K:Q'ty Change

Copyright (C) 2017 YANMAR GLOBAL CS CO., LTD. All RightsReserved.

Fig.140. BATTERY SUPPORT

(A)=YT235Y, EU
(B)=
(C)=
(D)=
(E)=
(F)=

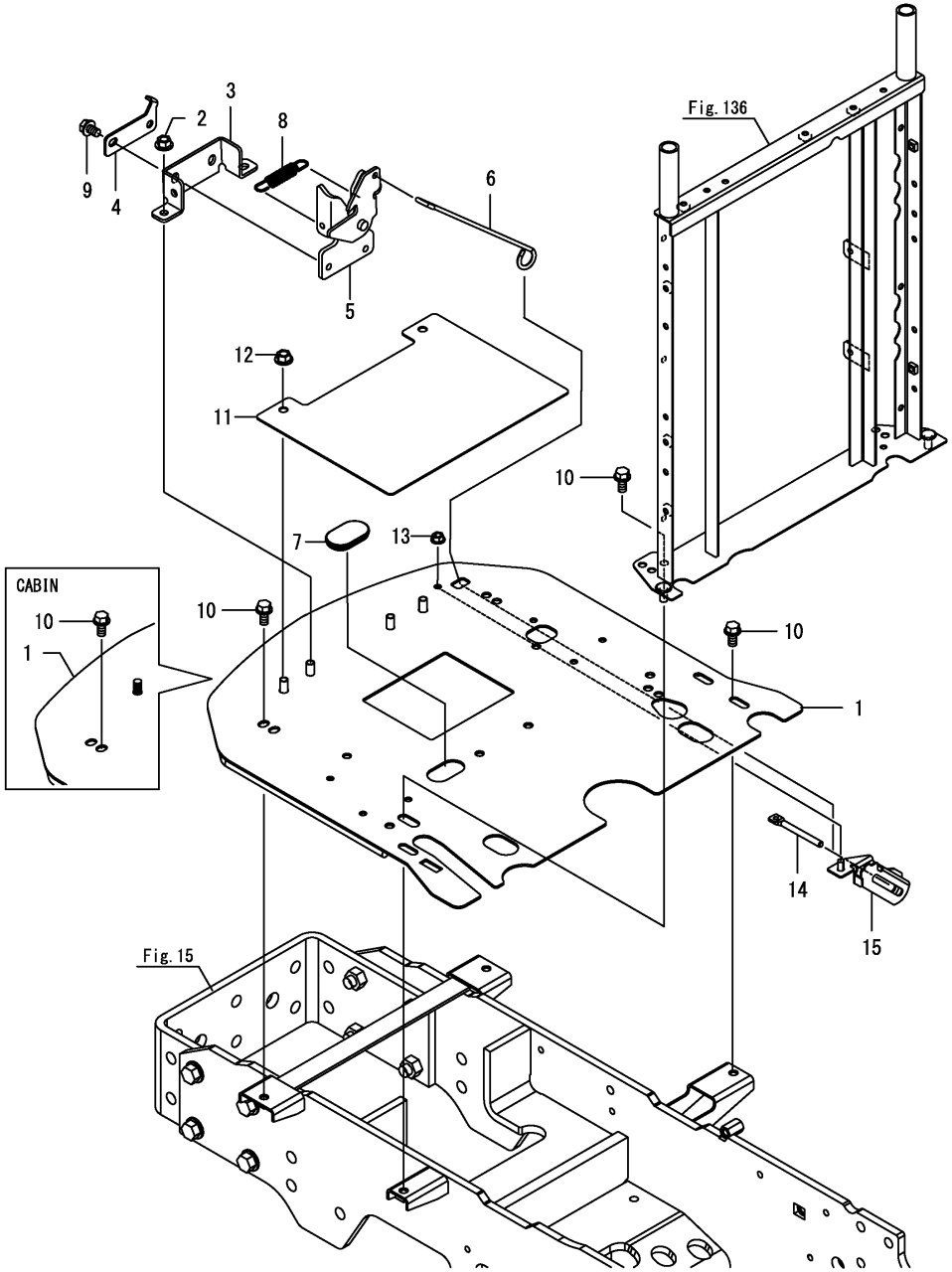

No.	Lev.	Parts No.	Description	Q'ty (A)	(B)	(C)	(D)	(E)	(F)	I	R
1	1	1A8426-01610	SUPPORT ASSY,BATTERY	1							
2	1	194990-22140	NUT, M8	2							
3	1	1A8420-60651	STAY, LOCK	1							
4	1	1A8420-60670	PLATE, POSITION	1							
5	1	1A8400-60700	LOCK ASSY, BONNET	1							
6	1	1A8426-61450	ROD, BONNET LOCK	1							
7	1	1A8475-60060	GROMMET, HOSE	1							
8	1	1C7170-91300	SPRING, 11X51	1							
9	1	26106-080122	BOLT, M8X 12 PLATED	2							
10	1	26106-080162	BOLT, M8X 16 PLATED	4							
11	1	1A8426-01660	PLATE, BATTERY	1							
12	1	194990-22140	NUT, M8	2							
13	1	194990-22130	NUT, M6	1							
14	1	1A8426-61150	TOOL, BONNET RELEASE	1							
15	1	1A8426-61171	GUARD ASSY,ROD	1							

N:Old ◄Yes/No► New, Q:Old ◄No/Yes► New, R:Old ◄Yes/Yes► New, S:Old ◄No/No► New, W:Add, Z:Discontinued, F:Interchangeable by set, K:Q'ty Change

Copyright (C) 2017 YANMAR GLOBAL CS CO., LTD. All RightsReserved.

Fig.141. BONNET STAND

(A)=YT235Y, EU
(B)=
(C)=
(D)=
(E)=
(F)=

No.	Lev.	Parts No.	Description	Q'ty (A)	(B)	(C)	(D)	(E)	(F)	I	R
1	1	1A8470-61360	DAMPER, GAS 700	1							
2	1	22372-100000	PIN, SNAP 10	2							
3	1	22487-100350	PIN 10X 35	1							

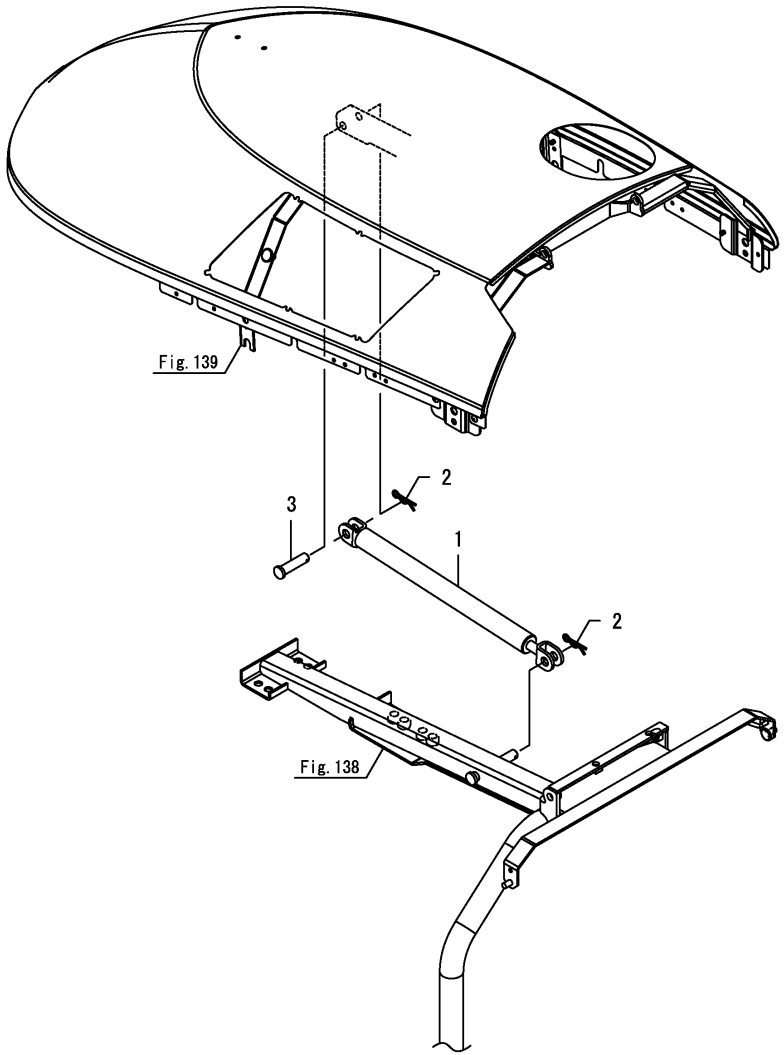

N:Old $\xleftrightarrow[\text{No}]{\text{Yes}}$ New, Q:Old $\xleftrightarrow[\text{Yes}]{\text{No}}$ New, R:Old $\xleftrightarrow[\text{Yes}]{\text{Yes}}$ New, S:Old $\xleftrightarrow[\text{No}]{\text{No}}$ New, W:Add, Z:Discontinued, F:Interchangeable by set, K:Q'ty Change

Copyright (C) 2017 YANMAR GLOBAL CS CO., LTD. All RightsReserved.

Fig.142. DUCT(BONNET)

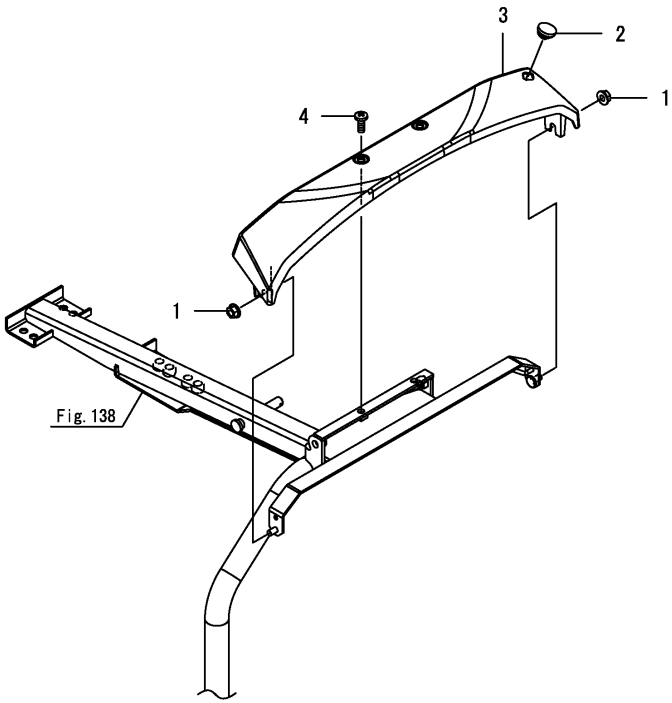

(A)=YT235Y, EU
(B)=
(C)=
(D)=
(E)=
(F)=

No.	Lev.	Parts No.	Description	Q'ty (A)	(B)	(C)	(D)	(E)	(F)	I	R
1	1	194990-22130	NUT, M6	2							
2	1	194197-56350	GROMMET	1							
3	1	1A8400-61462	DUCT, BONNET ROPS	1							
4	1	26589-060162	SCREW, M6	2							

N:Old $\xleftarrow[\text{No}]{\text{Yes}}$ New, Q:Old $\xleftarrow[\text{Yes}]{\text{No}}$ New, R:Old $\xleftarrow[\text{Yes}]{\text{Yes}}$ New, S:Old $\xleftarrow[\text{No}]{\text{No}}$ New, W:Add, Z:Discontinued, F:Interchangeable by set, K:Q'ty Change

Copyright (C) 2017 YANMAR GLOBAL CS CO., LTD. All RightsReserved.

Fig.143. DUCT(BONNET)(CABIN)

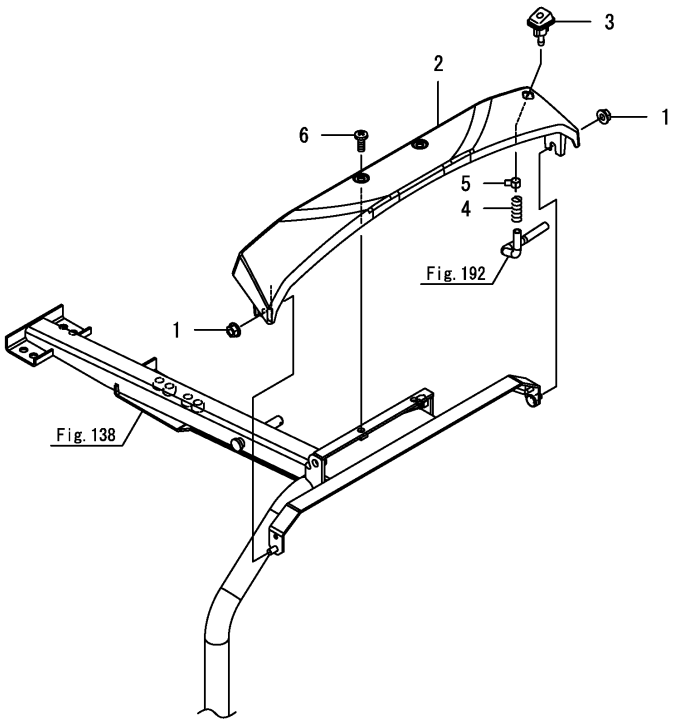

(A)=YT235Y, EU
(B)=
(C)=
(D)=
(E)=
(F)=

No.	Lev.	Parts No.	Description	Q'ty (A)	(B)	(C)	(D)	(E)	(F)	I	R
1	1	194990-22130	NUT, M6	2							
2	1	1A8400-61462	DUCT, BONNET ROPS	1							
3	1	198094-86060	NOZZLE, WASHER	1							
4	1	198094-86560	SPRING, NOZZLE	1							
5	1	23080-007000	CLAMP, 7	1							
6	1	26589-060162	SCREW, M6	2							

N:Old $\xleftrightarrow[\text{No}]{\text{Yes}}$ New, Q:Old $\xleftrightarrow[\text{Yes}]{\text{No}}$ New, R:Old $\xleftrightarrow[\text{Yes}]{\text{Yes}}$ New, S:Old $\xleftrightarrow[\text{No}]{\text{No}}$ New, W:Add, Z:Discontinued, F:Interchangeable by set, K:Q'ty Change

Copyright (C) 2017 YANMAR GLOBAL CS CO., LTD. All RightsReserved.

Fig.144. COVER(BONNET)

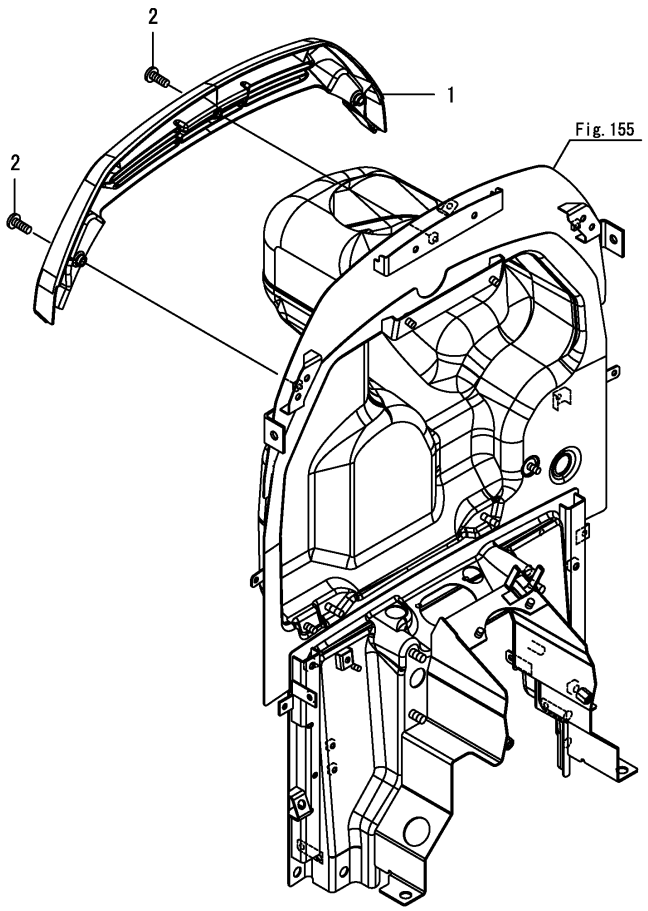

(A)=YT235Y, EU
(B)=
(C)=
(D)=
(E)=
(F)=

No.	Lev.	Parts No.	Description	Q'ty (A)	(B)	(C)	(D)	(E)	(F)	I	R
1	1	1A8425-61460	COVER, BONNET ROPS	1							
2	1	26589-060162	SCREW, M6	3							

N:Old $\xleftarrow[\text{No}]{\text{Yes}}$ New, Q:Old $\xleftarrow[\text{Yes}]{\text{No}}$ New, R:Old $\xleftarrow[\text{Yes}]{\text{Yes}}$ New, S:Old $\xleftarrow[\text{No}]{\text{No}}$ New, W:Add, Z:Discontinued, F:Interchangeable by set, K:Q'ty Change

Copyright (C) 2017 YANMAR GLOBAL CS CO., LTD. All RightsReserved.

Fig.145. DASHBOARD

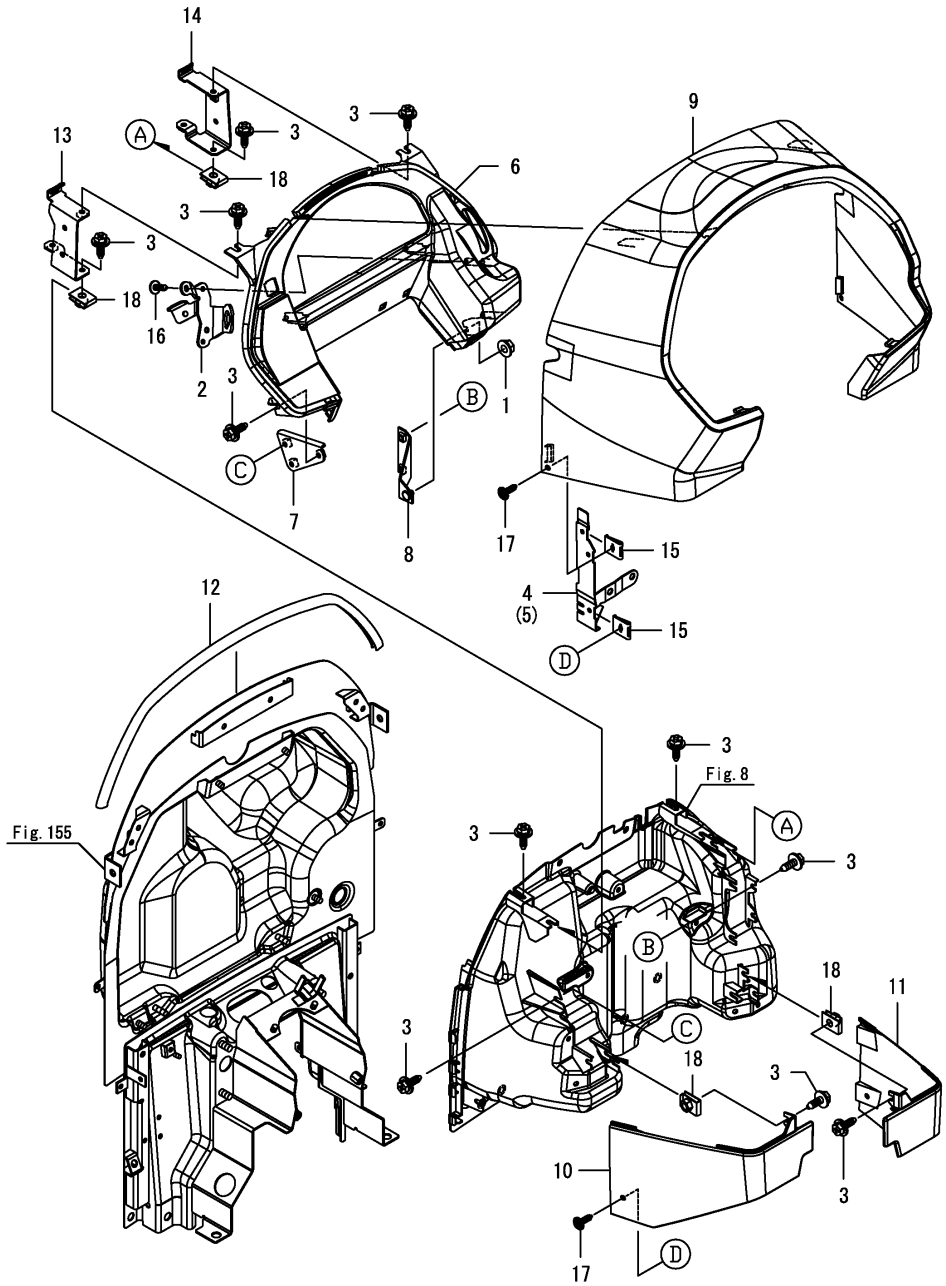

(A)=YT235Y, EU
(B)=
(C)=
(D)=
(E)=
(F)=

No.	Lev.	Parts No.	Description	Q'ty (A)	(B)	(C)	(D)	(E)	(F)	I	R
1	1	194990-22130	NUT, M6	1							
2	1	1A8400-58920	BRACKET ASSY, SWITCH	1							
3	1	198072-60590	BOLT, M6X20	13							
4	1	1A8405-60700	STAY ASSY, L	1							
5	1	1A8405-60710	STAY ASSY, R	1							
6	1	1A8400-61380	DASHBOARD, LOWER	1							
7	1	1A8405-61450	STAY ASSY, DASH L	1							
8	1	1A8405-61471	STAY ASSY, DASH R	1							
9	1	1A8400-61501	DASHBOARD, UPPER	1							
10	1	1A8405-61532	COVER, PEDAL L	1							
11	1	1A8405-61541	COVER, PEDAL R	1							
12	1	1A8425-61550	TRIM, DS	1							
13	1	1A8405-61570	EXTENSION ASSY, L	1							
14	1	1A8405-61581	EXTENSION ASSY, R	1							
15	1	194167-61650	NUT, SPEED 5	4							
16	1	194940-61790	SCREW, TAPPING M5X16	3							
17	1	194940-61790	SCREW, TAPPING M5X16	4							
18	1	198071-61890	NUT, SPEED M6	4							

N:Old $\xleftrightarrow[\text{No}]{\text{Yes}}$ New, Q:Old $\xleftrightarrow[\text{Yes}]{\text{No}}$ New, R:Old $\xleftrightarrow[\text{Yes}]{\text{Yes}}$ New, S:Old $\xleftrightarrow[\text{No}]{\text{No}}$ New, W:Add, Z:Discontinued, F:Interchangeable by set, K:Q'ty Change

Copyright (C) 2017 YANMAR GLOBAL CS CO., LTD. All RightsReserved.

Fig.146. DASHBOARD(CABIN)

(A)=YT235Y, EU
(B)=
(C)=
(D)=
(E)=
(F)=

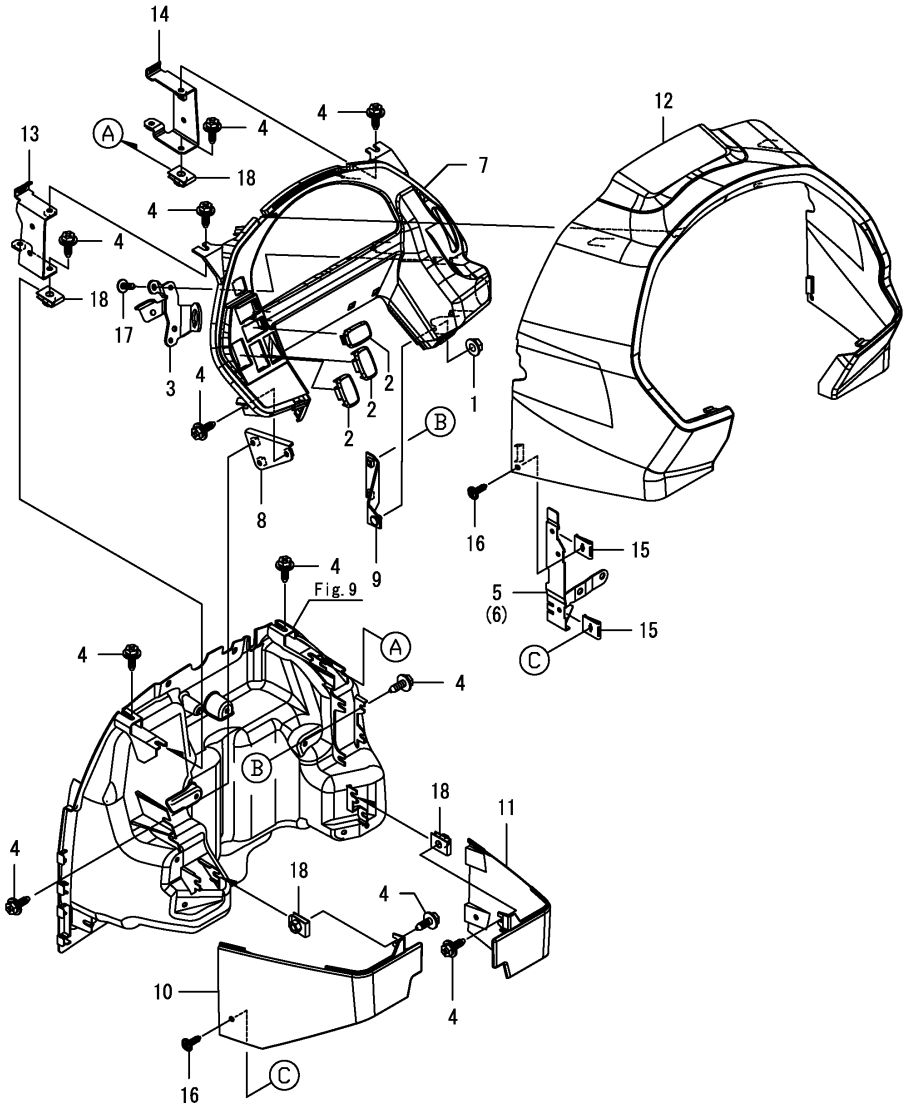

No.	Lev.	Parts No.	Description	Q'ty (A)	(B)	(C)	(D)	(E)	(F)	I	R
1	1	194990-22130	NUT, M6	1							
2	1	1A7805-52420	COVER, SWITCH	3							
3	1	1A8400-58920	BRACKET ASSY, SWITCH	1							
4	1	198072-60590	BOLT, M6X20	13							
5	1	1A8405-60700	STAY ASSY, L	1							
6	1	1A8405-60710	STAY ASSY, R	1							
7	1	1A8426-61380	DASHBOARD, LOWER	1							
8	1	1A8405-61450	STAY ASSY, DASH L	1							
9	1	1A8405-61471	STAY ASSY, DASH R	1							
10	1	1A8405-61532	COVER, PEDAL L	1							
11	1	1A8405-61541	COVER, PEDAL R	1							
12	1	1A8425-61501	DASHBOARD, UPPER	1							
13	1	1A8405-61570	EXTENSION ASSY, L	1							
14	1	1A8405-61581	EXTENSION ASSY, R	1							
15	1	194167-61650	NUT, SPEED 5	4							
16	1	194940-61790	SCREW, TAPPING M5X16	4							
17	1	194940-61790	SCREW, TAPPING M5X16	3							
18	1	198071-61890	NUT, SPEED M6	4							

N:Old $\xleftarrow[\text{No}]{\text{Yes}}$ New, Q:Old $\xleftarrow[\text{Yes}]{\text{No}}$ New, R:Old $\xleftarrow[\text{Yes}]{\text{Yes}}$ New, S:Old $\xleftarrow[\text{No}]{\text{No}}$ New, W:Add, Z:Discontinued, F:Interchangeable by set, K:Q'ty Change

Copyright (C) 2017 YANMAR GLOBAL CS CO., LTD. All RightsReserved.

Fig.147. COLUMN COVER

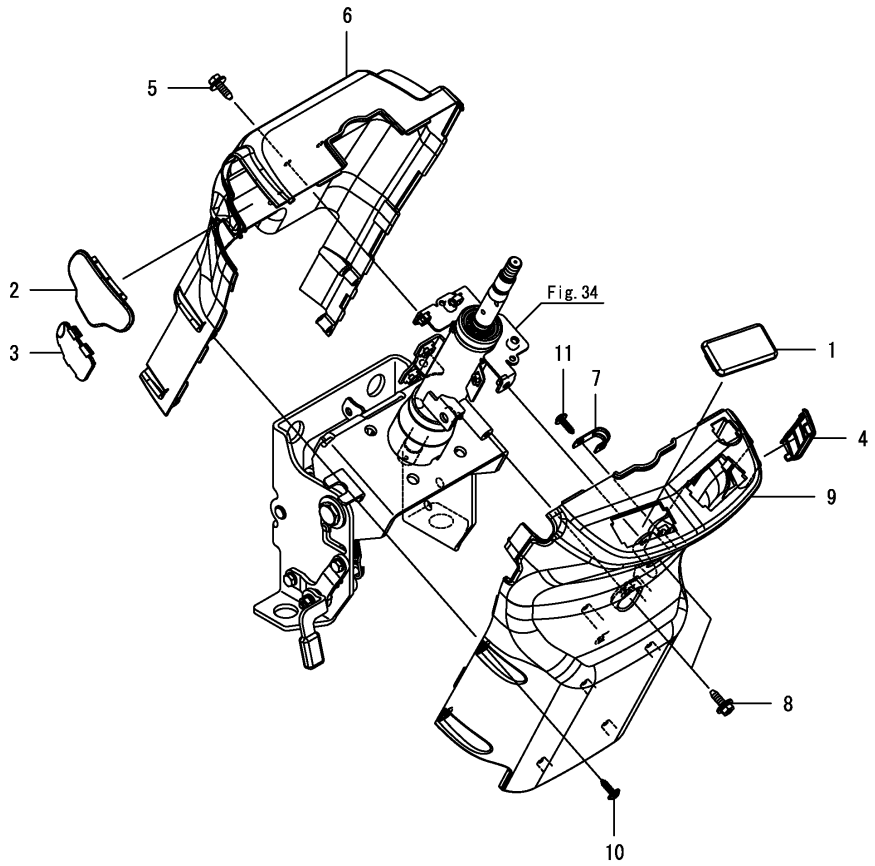

(A)=YT235Y, EU (D)=
(B)= (E)=
(C)= (F)=

No.	Lev.	Parts No.	Description	Q'ty (A)	(B)	(C)	(D)	(E)	(F)	I	R
1	1	1A8405-61700	CAP,COLUMN COVER A	1							
2	1	1A8405-61710	CAP,COLUMN COVER B	1							
3	1	1A8405-61720	CAP,COLUMN COVER C	1							
4	1	1A8405-61730	CAP,COLUMN COVER D	1							
5	1	198072-60590	BOLT, M6X20	2							
6	1	1A8060-61662	COVER, COLUMN F	1							
7	1	194440-51630	CLAMP, HARNESS C	1							
7-1	1	1A8470-51800	CLIP, NYLON 16	1						N	
	(A=F100274)										
8	1	198072-60590	BOLT, M6X20	2							
9	1	1A8060-61671	COVER, COLUMN R	1							
9-1	1	1A8060-61672	COVER, COLUMN R	1						N	
	(A=F100274)										
10	1	194940-61790	SCREW, TAPPING M5X16	4							
11	1	194940-61790	SCREW, TAPPING M5X16	1							

N:Old $\xleftarrow[\text{No}]{\text{Yes}}$ New, Q:Old $\xleftarrow[\text{Yes}]{\text{No}}$ New, R:Old $\xleftarrow[\text{Yes}]{\text{Yes}}$ New, S:Old $\xleftarrow[\text{No}]{\text{No}}$ New, W:Add, Z:Discontinued, F:Interchangeable by set, K:Q'ty Change

Copyright (C) 2017 YANMAR GLOBAL CS CO., LTD. All RightsReserved.

Fig.148. CURRENT PLATE

(A)=YT235Y, EU
(B)=
(C)=
(D)=
(E)=
(F)=

No.	Lev.	Parts No.	Description	Q'ty (A)	(B)	(C)	(D)	(E)	(F)	I	R
1	1	1A8420-11310	BRACKET ASSY,HINGE A	1							
2	1	194990-22130	NUT, M6	1							
3	1	1A8420-61901	PLATE ASSY, CURRENT	1							
4	1	26106-060162	BOLT, M6X 16 PLATED	2							
5	1	26106-080162	BOLT, M8X 16 PLATED	3							
6	1	26487-060163	BOLT, M6X16	1							

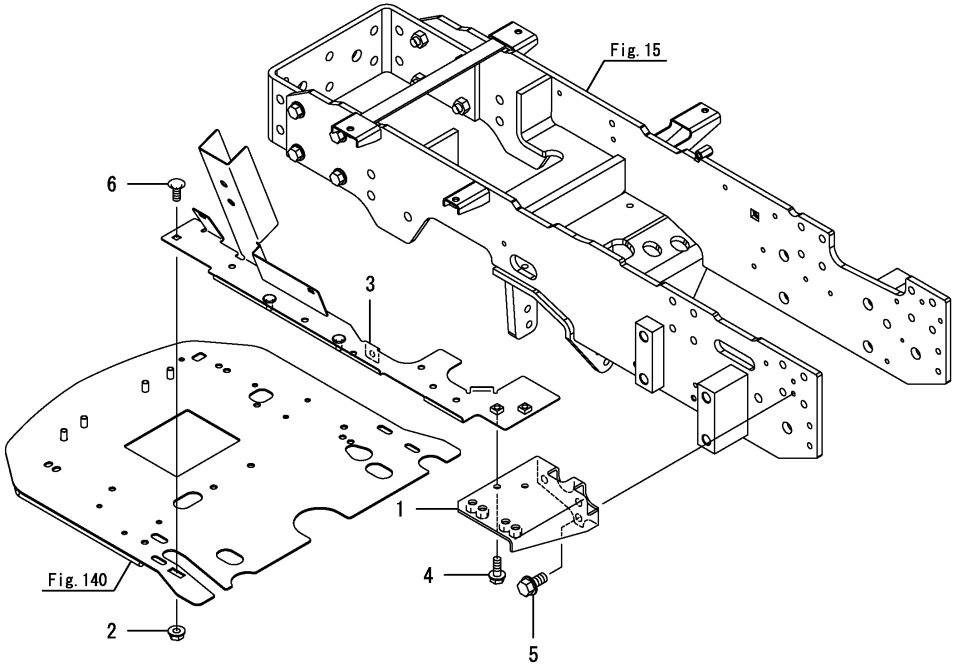

N:Old $\frac{\text{Yes}}{\text{No}}$ New, Q:Old $\frac{\text{No}}{\text{Yes}}$ New, R:Old $\frac{\text{Yes}}{\text{Yes}}$ New, S:Old $\frac{\text{No}}{\text{No}}$ New, W:Add, Z:Discontinued, F:Interchangeable by set, K:Q'ty Change

Copyright (C) 2017 YANMAR GLOBAL CS CO., LTD. All RightsReserved.

Fig.149. INTERIORS

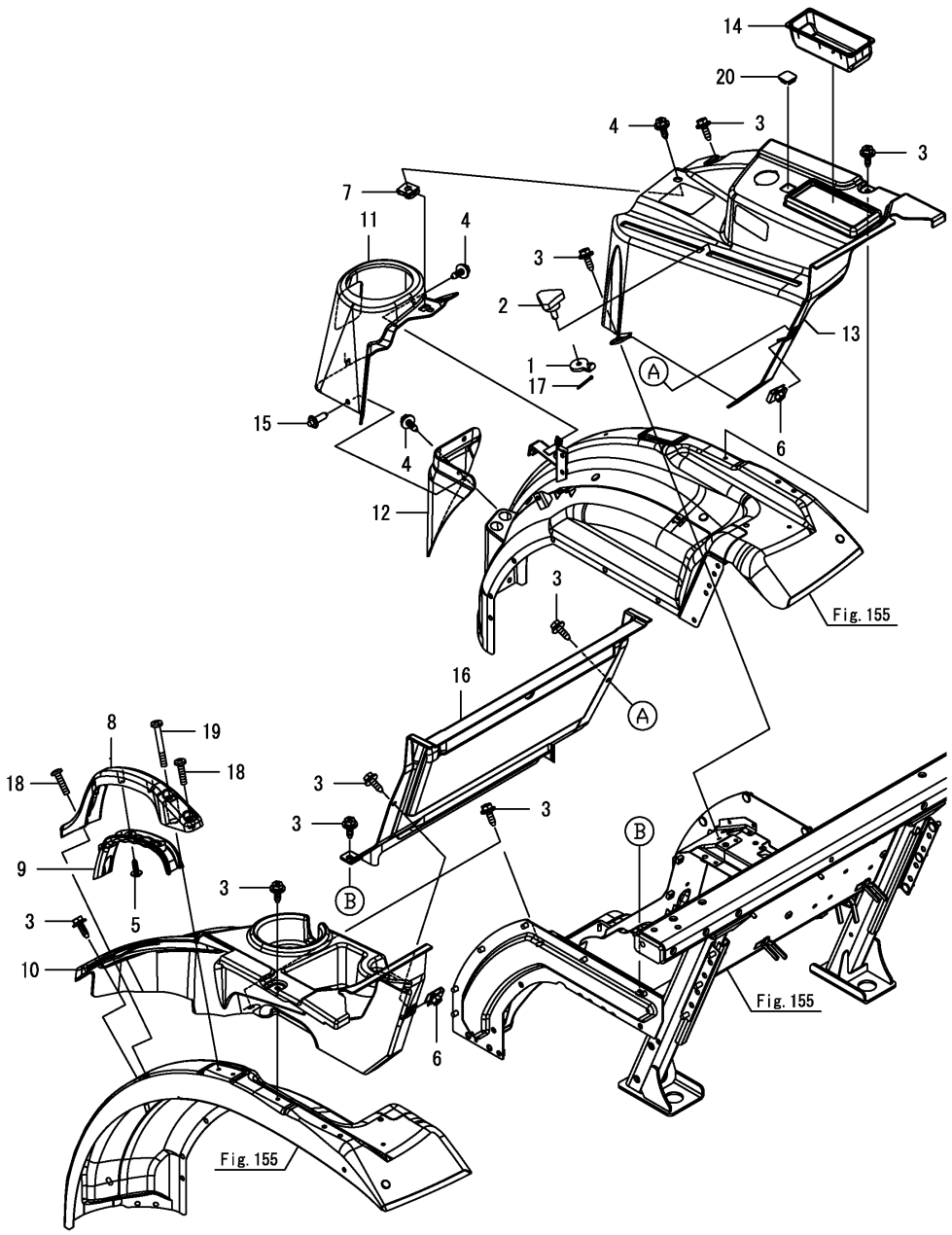

(A)=YT235Y, EU
(B)=
(C)=
(D)=
(E)=
(F)=

No.	Lev.	Parts No.	Description	Q'ty (A)	(B)	(C)	(D)	(E)	(F)	I	R
1	1	198121-47111	STOPPER, LEVER	1							
2	1	194130-47851	BOLT, KNOB M6X15	1							
3	1	198072-60590	BOLT, M6X20	10							
4	1	198072-60590	BOLT, M6X20	3							
5	1	194940-61790	SCREW, TAPPING M5X16	3							
6	1	198071-61890	NUT, SPEED M6	2							
7	1	198071-61890	NUT, SPEED M6	1							
8	1	1A8470-62280	GRIP, ASIST	1							
9	1	1A8470-62290	COVER, GRIP	1							
10	1	1A8406-63500	GUIDE, LEVER L	1							
	(A=F100051)										
11	1	1A8405-63550	COVER,LOADER LEVER A	1							
12	1	1A8405-63560	COVER,LOADER LEVER B	1							
13	1	1A8406-63601	GUIDE, LEVER R	1							
	(A=F100384)										
14	1	1A8405-63670	COVER,LEVER GUIDE	1							
15	1	1A8060-84280	RIVET, PUSH	3							
16	1	1A8426-84500	COVER, SEAT BACK	1							
17	1	22417-200200	PIN, COTTER 2.0X20	1							
18	1	26589-060252	SCREW, M6X	2							
19	1	26589-060502	SCREW, M6X50	1							
20	1	1A8296-60440	COVER, SWITCH	1							

N:Old $\frac{\text{Yes}}{\text{No}}$ New, Q:Old $\frac{\text{No}}{\text{Yes}}$ New, R:Old $\frac{\text{Yes}}{\text{Yes}}$ New, S:Old $\frac{\text{No}}{\text{No}}$ New, W:Add, Z:Discontinued, F:Interchangeable by set, K:Q'ty Change

Copyright (C) 2017 YANMAR GLOBAL CS CO., LTD. All RightsReserved.

Fig.150. PROTECTOR

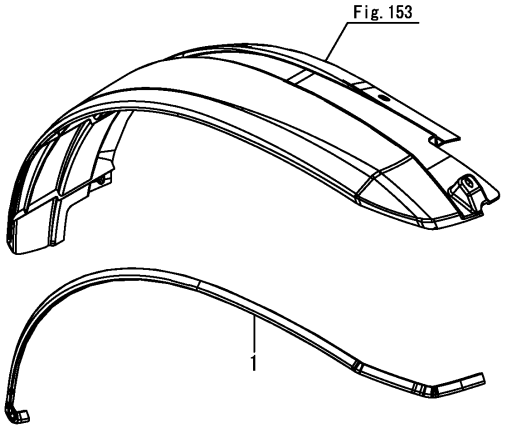

(A)=YT235Y, EU
(B)=
(C)=
(D)=
(E)=
(F)=

No.	Lev.	Parts No.	Description	Q'ty (A)	(B)	(C)	(D)	(E)	(F)	I	R
1	1	1A8406-62380	PROTECTOR, EDGE	2							

N:Old ←Yes/No→ New, Q:Old ←No/Yes→ New, R:Old ←Yes/Yes→ New, S:Old ←No/No→ New, W:Add, Z:Discontinued, F:Interchangeable by set, K:Q'ty Change

Copyright (C) 2017 YANMAR GLOBAL CS CO., LTD. All RightsReserved.

Fig.151. INTERIORS(CABIN)

(A)=YT235Y, EU
(B)=
(C)=
(D)=
(E)=
(F)=

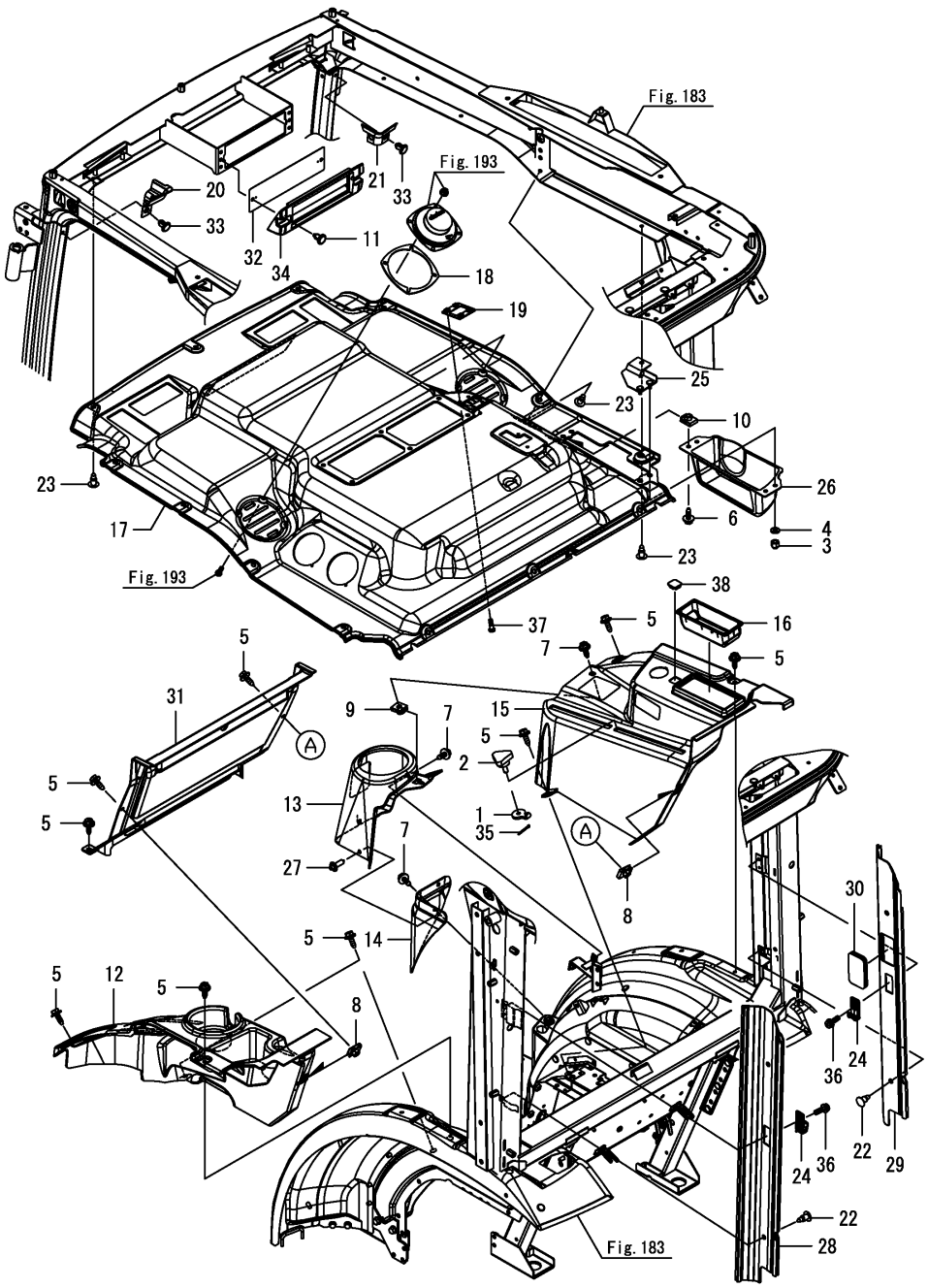

No.	Lev.	Parts No.	Description	Q'ty (A)	(B)	(C)	(D)	(E)	(F)	I	R
1	1	198121-47111	STOPPER, LEVER	1							
2	1	194130-47851	BOLT, KNOB M6X15	1							
3	1	1A7030-53560	NUT, CAP M6	2							
4	1	1A8060-54260	WASHER, 6 BLACK	2							
5	1	198072-60590	BOLT, M6X20	10							
6	1	198072-60590	BOLT, M6X20	2							
7	1	198072-60590	BOLT, M6X20	3							
8	1	198071-61890	NUT, SPEED M6	2							
9	1	198071-61890	NUT, SPEED M6	1							
10	1	198071-61890	NUT, SPEED M6	2							
11	1	1A7450-62320	RIVET, NYLON	2							
12	1	1A8425-63501	GUIDE, LEVER L	1							
13	1	1A8405-63550	COVER,LOADER LEVER A	1							
14	1	1A8405-63560	COVER,LOADER LEVER B	1							
15	1	1A8426-63600	GUIDE, LEVER R	1							
16	1	1A8405-63670	COVER,LEVER GUIDE	1							
17	1	1A8425-84101	ROOF ASSY, INNER	1							
18	1	1A8420-84120	SPACER, SPEAKER	2							
19	1	1A8420-84150	PLATE ASSY, LEVER	1							
20	1	1A8420-84170	COVER,ROOF CORNER L	1							
21	1	1A8420-84180	COVER,ROOF CORNER R	1							
22	1	1A8110-84210	RIVET, PUSH	4							
23	1	1A8110-84210	RIVET, PUSH	14							
24	1	1A8420-84210	HOOK, PILLAR	2							
25	1	1A8420-84220	BRACKET ASSY, COVER	1							
26	1	1A8420-84252	COVER, A/C CONTROL	1							
27	1	1A8060-84280	RIVET, PUSH	3							
28	1	1A8425-84302	COVER, REAR PILLAR L	1							
29	1	1A8425-84312	COVER, REAR PILLAR R	1							
30	1	1A8420-84330	CAP, FUSE	1							
31	1	1A8426-84490	M ASSY,SEAT BACK	1							
32	1	1A8420-84610	PLATE, RADIO	1							
33	1	197810-84840	RIVET, NYLON	4							
34	1	1A8420-86850	COVER,RADIO-CASSETTE	1							
35	1	22417-200200	PIN, COTTER 2.0X20	1							
36	1	26023-060202	SCREW, M6X20	2							
37	1	26559-050162	SCREW, M5X16	2							
38	1	1A8296-60440	COVER, SWITCH	1							

N:Old $\xleftarrow[\text{No}]{\text{Yes}}$ New, Q:Old $\xleftarrow[\text{Yes}]{\text{No}}$ New, R:Old $\xleftarrow[\text{Yes}]{\text{Yes}}$ New, S:Old $\xleftarrow[\text{No}]{\text{No}}$ New, W:Add, Z:Discontinued, F:Interchangeable by set, K:Q'ty Change

Copyright (C) 2017 YANMAR GLOBAL CS CO., LTD. All RightsReserved.

Fig.152. FLOOR COVER

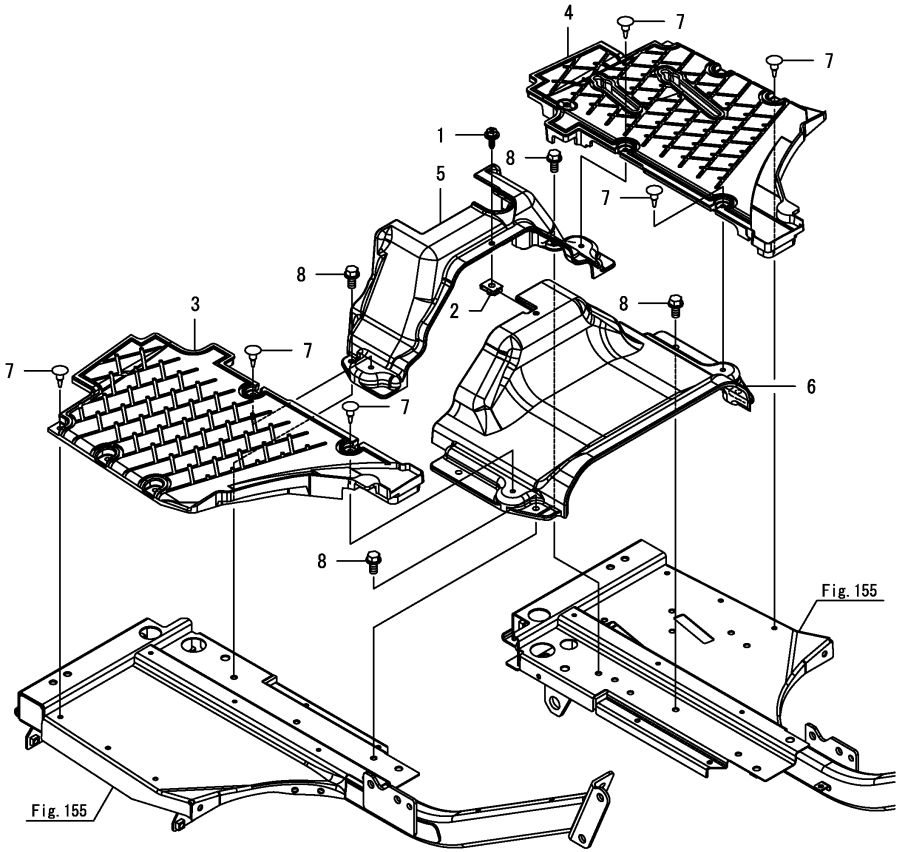

(A)=YT235Y, EU
(B)=
(C)=
(D)=
(E)=
(F)=

No.	Lev.	Parts No.	Description	Q'ty (A)	(B)	(C)	(D)	(E)	(F)	I	R
1	1	198072-60590	BOLT, M6X20	1							
2	1	198071-61890	NUT, SPEED M6	1							
3	1	1A8400-62300	MAT, FLOOR L	1							
3-1	1	1A8400-62301	MAT, FLOOR L	1						F	1
	(A=F100248)										
4	1	1A8405-62310	MAT, FLOOR R	1							
4-1	1	1A8405-62311	MAT, FLOOR R	1						F	1
	(A=F100248)										
5	1	1A8400-62341	COVER, FLOOR FRONT	1							
6	1	1A8400-62350	COVER, FLOOR	1							
7	1	194697-62560	CLIP, HOLE CAP	10							
8	1	26106-080162	BOLT, M8X 16 PLATED	6							

Remarks
(1)No.3-1, 4-1 interchangeable by set.

N:Old $\xleftrightarrow[\text{No}]{\text{Yes}}$ New, Q:Old $\xleftrightarrow[\text{Yes}]{\text{No}}$ New, R:Old $\xleftrightarrow[\text{Yes}]{\text{Yes}}$ New, S:Old $\xleftrightarrow[\text{No}]{\text{No}}$ New, W:Add, Z:Discontinued, F:Interchangeable by set, K:Q'ty Change

Copyright (C) 2017 YANMAR GLOBAL CS CO., LTD. All RightsReserved.

Fig.153. OVER FENDER

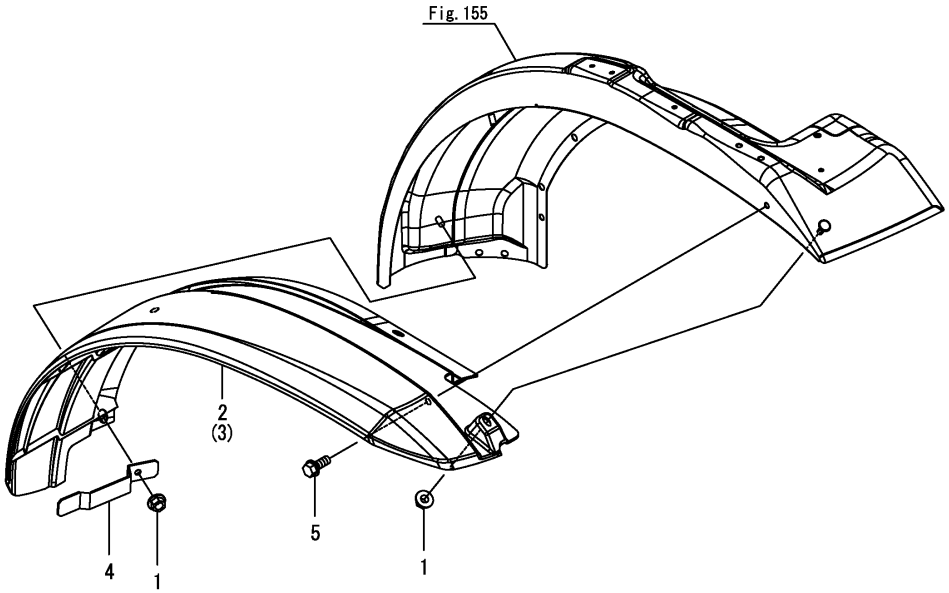

(A)=YT235Y, EU
(B)=
(C)=
(D)=
(E)=
(F)=

No.	Lev.	Parts No.	Description	Q'ty (A)	(B)	(C)	(D)	(E)	(F)	I	R
1	1	194990-22140	NUT, M8	10							
2	1	1A8420-62251	OVER FENDER, L	1							
3	1	1A8420-62261	OVER FENDER, R	1							
4	1	1A8425-62300	SUPPORT,OVER FENDER	2							
5	1	26106-080202	BOLT, M8X 20 PLATED	2							

N:Old $\xleftrightarrow[\text{No}]{\text{Yes}}$ New, Q:Old $\xleftrightarrow[\text{Yes}]{\text{No}}$ New, R:Old $\xleftrightarrow[\text{Yes}]{\text{Yes}}$ New, S:Old $\xleftrightarrow[\text{No}]{\text{No}}$ New, W:Add, Z:Discontinued, F:Interchangeable by set, K:Q'ty Change

Copyright (C) 2017 YANMAR GLOBAL CS CO., LTD. All RightsReserved.

Fig.154. SUB STEP

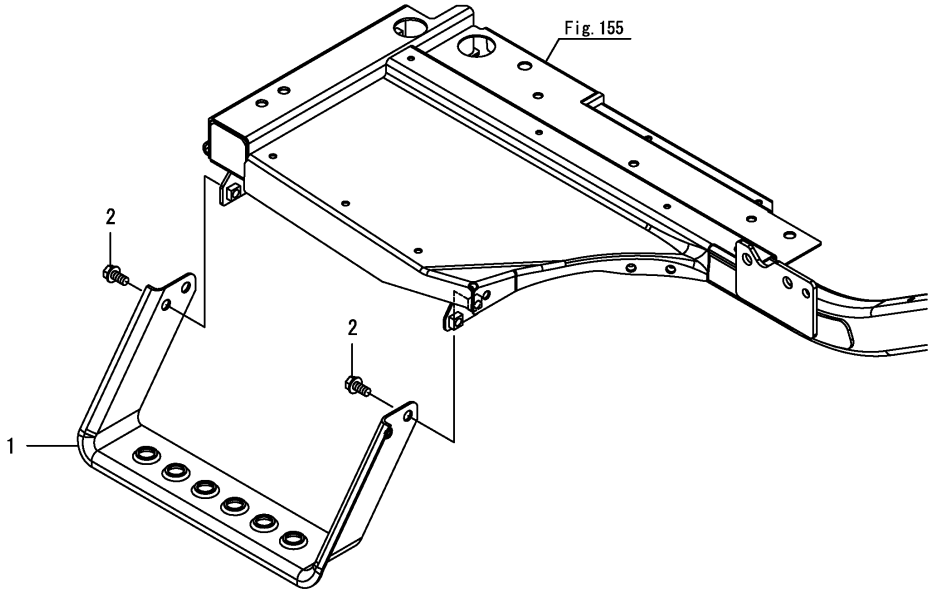

(A)=YT235Y, EU (D)=
(B)= (E)=
(C)= (F)=

No.	Lev.	Parts No.	Description	Q'ty (A)	(B)	(C)	(D)	(E)	(F)	I	R
1	1	198200-62560	STEP, SUB	1							
2	1	26106-080162	BOLT, M8X 16 PLATED	4							

N:Old $\xleftrightarrow[\text{No}]{\text{Yes}}$ New, Q:Old $\xleftrightarrow[\text{Yes}]{\text{No}}$ New, R:Old $\xleftrightarrow[\text{Yes}]{\text{Yes}}$ New, S:Old $\xleftrightarrow[\text{No}]{\text{No}}$ New, W:Add, Z:Discontinued, F:Interchangeable by set, K:Q'ty Change

Copyright (C) 2017 YANMAR GLOBAL CS CO., LTD. All RightsReserved.

Fig.155. FLOOR

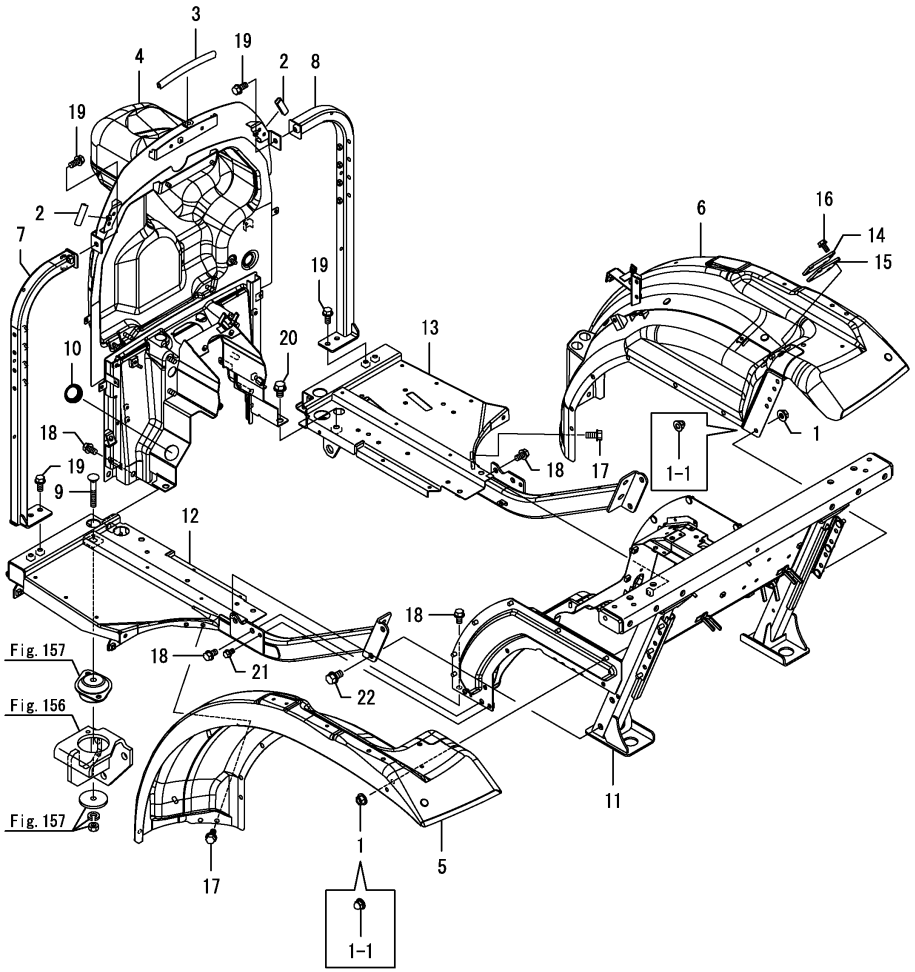

(A)=YT235Y, EU (D)=
(B)= (E)=
(C)= (F)=

No.	Lev.	Parts No.	Description	Q'ty (A)	(B)	(C)	(D)	(E)	(F)	I	R
1	1	194990-22140	NUT, M8	18							
1-1	1	1A8110-83730	NUT, CAP M8	18						F	1
	(A=F200002)										
2	1	195616-24930	TRIM	2							
3	1	1A8405-61970	TRIM, 180	1							
4	1	1A8405-62003	PLATE ASSY, AIRCUT	1							
5	1	1A8406-62091	M ASSY,FENDER L	1							
6	1	1A8406-62111	FENDER ASSY, R	1							
6-1	1	1A8406-62112	FENDER ASSY, R	1						N	
	(A=F200002)										
7	1	1A8405-62201	PIPE ASSY,FOOT GU. L	1							
8	1	1A8405-62210	PIPE ASSY,FOOT GU. R	1							
9	1	1A8070-62240	BOLT,CARRIAGE M12X80	2							
10	1	198165-62460	GROMMET, 34A	1							
11	1	1A8406-62500	FLOOR ASSY	1							
11-1	1	1A8406-62501	FLOOR ASSY	1						N	1
	(A=F200002)										
12	1	1A8406-62600	PLATE ASSY, FLOOR L	1							
12-1	1	1A8406-62601	PLATE ASSY, FLOOR L	1						N	
	(A=F100063)										
12-2	1	1A8406-62602	PLATE ASSY, FLOOR L	1						N	
	(A=F200002)										
13	1	1A8406-62610	PLATE ASSY, FLOOR R	1							
13-1	1	1A8406-62611	PLATE ASSY, FLOOR R	1						N	
	(A=F100063)										
13-2	1	1A8406-62612	PLATE ASSY, FLOOR R	1						N	
	(A=F200002)										
14	1	1A8420-84442	PLATE	1							
15	1	1A8420-84452	SEAL, PLATE	1							
16	1	26106-060122	BOLT, M6X 12 PLATED	4							
17	1	26106-080162	BOLT, M8X 16 PLATED	6							
18	1	26106-100162	BOLT, M10X 16 PLATED	10							
19	1	26106-100162	BOLT, M10X 16 PLATED	6							
20	1	26106-120162	BOLT, M12X 16 PLATED	2							
21	1	26106-080162	BOLT, M8X 16 PLATED	2							
22	1	26106-120252	BOLT, M12X 25 PLATED	6							

Remarks
(1)No.1-1, 11-1 are interchangeable by set.

N:Old $\frac{\text{Yes}}{\text{No}}$ New, Q:Old $\frac{\text{No}}{\text{Yes}}$ New, R:Old $\frac{\text{Yes}}{\text{Yes}}$ New, S:Old $\frac{\text{No}}{\text{No}}$ New, W:Add, Z:Discontinued, F:Interchangeable by set, K:Q'ty Change

Copyright (C) 2017 YANMAR GLOBAL CS CO., LTD. All RightsReserved.

Fig.156. FLOOR MOUNT(1)

(A)=YT235Y, EU
(B)=
(C)=
(D)=
(E)=
(F)=

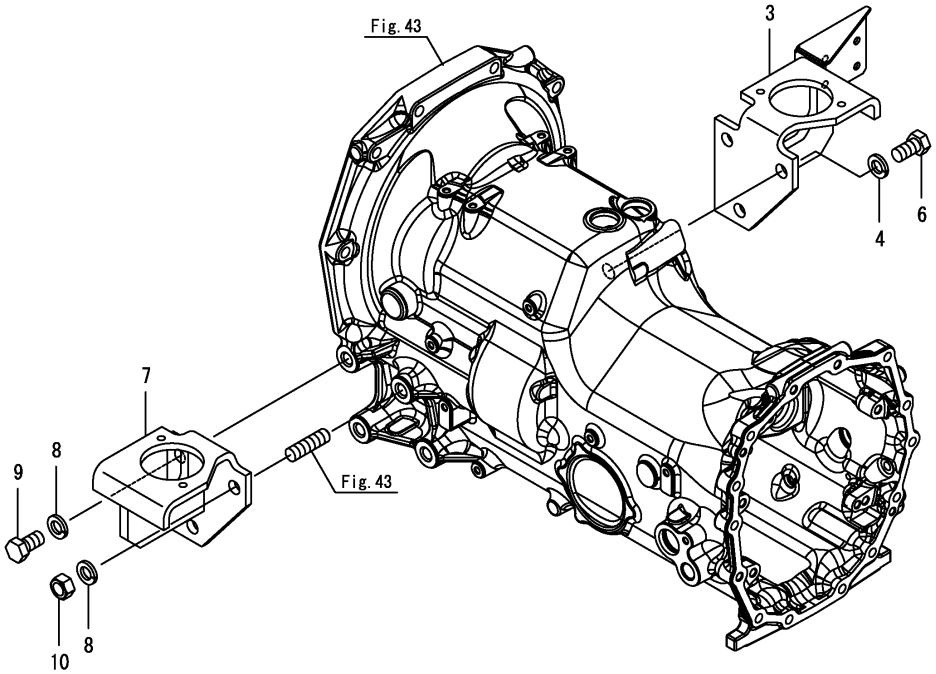

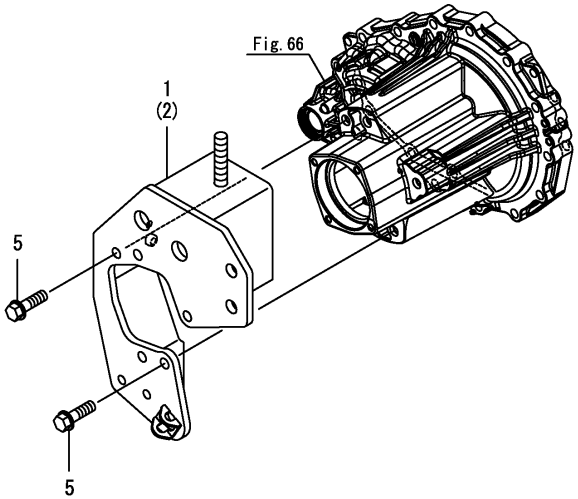

No.	Lev.	Parts No.	Description	Q'ty (A)	(B)	(C)	(D)	(E)	(F)	I	R
1	1	1A8425-62632	MOUNT ASSY, REAR L	1							
2	1	1A8425-62643	MOUNT ASSY, REAR R	1							
3	1	1A8401-62860	MOUNT ASSY, FRONT R	1							
4	1	22217-160000	WASHER, SPRING 16	3							
5	1	26106-120402	BOLT, M12X 40 PLATED	10							
6	1	26116-160302	BOLT, M16X 30 PLATED	3							
7	1	1A8400-62850	MOUNT ASSY, FRONT L	1							
8	1	22217-160000	WASHER, SPRING 16	3							
9	1	26116-160302	BOLT, M16X 30 PLATED	2							
10	1	26716-160002	NUT, M16	1							

N:Old $\frac{\text{Yes}}{\text{No}}$ New, Q:Old $\frac{\text{No}}{\text{Yes}}$ New, R:Old $\frac{\text{Yes}}{\text{Yes}}$ New, S:Old $\frac{\text{No}}{\text{No}}$ New, W:Add, Z:Discontinued, F:Interchangeable by set, K:Q'ty Change

Copyright (C) 2017 YANMAR GLOBAL CS CO., LTD. All RightsReserved.

Fig.157. FLOOR MOUNT(2)

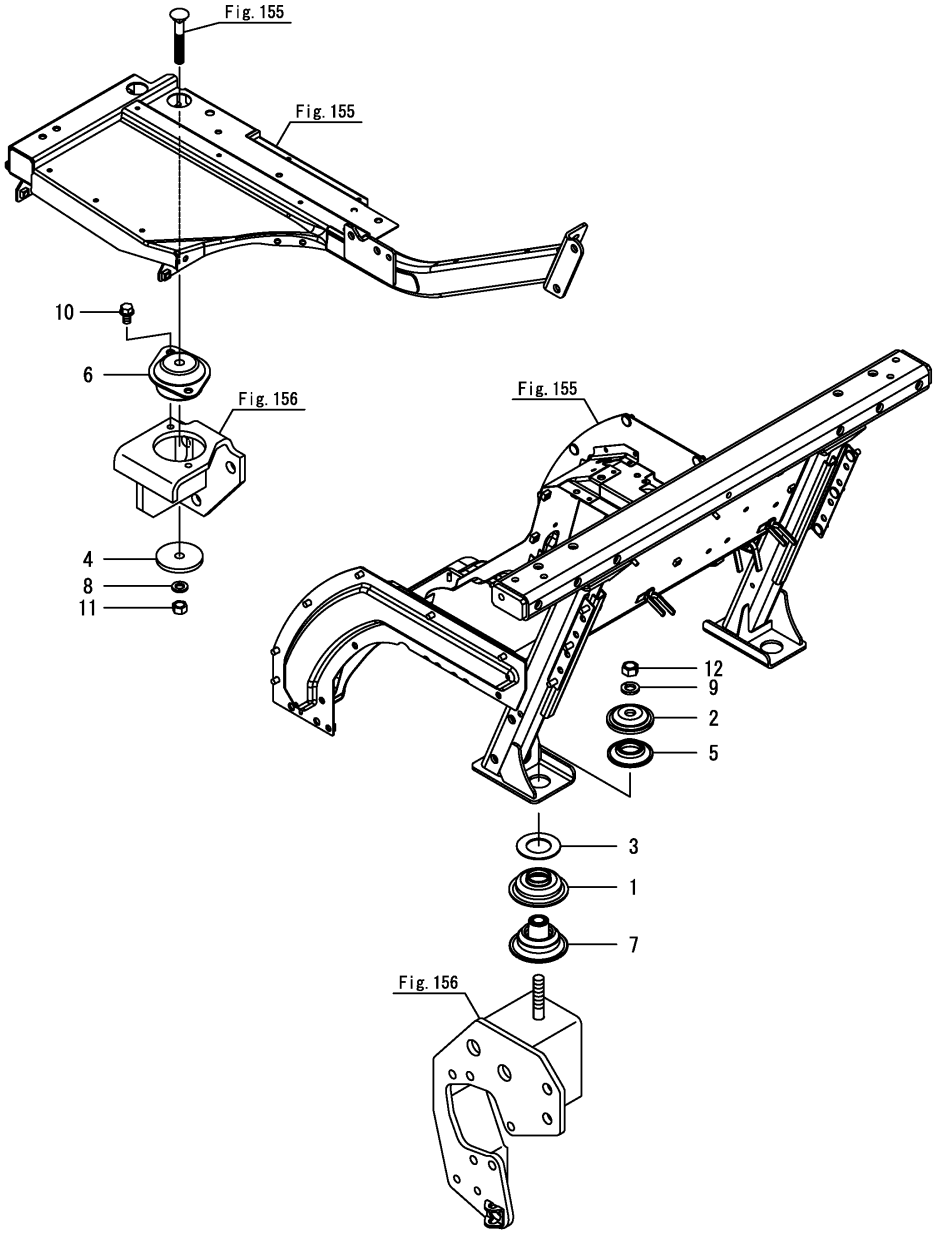

(A)=YT235Y, EU
(B)=
(C)=
(D)=
(E)=
(F)=

No.	Lev.	Parts No.	Description	Q'ty (A)	(B)	(C)	(D)	(E)	(F)	I	R
1	1	198071-62900	STOPPER, MOUNT	2							
2	1	198200-62910	STOPPER, U	2							
3	1	198208-62970	RUBBER, 34X60X2	2							
4	1	1A8070-62980	STOPPER	2							
5	1	1A8400-62980	MOUNT,UPPER	2							
6	1	1A8070-62990	MOUNT, RUBBER	2							
7	1	1A8400-62990	MOUNT,LOWER	2							
8	1	22217-120000	WASHER, SPRING 12	2							
9	1	22217-140000	WASHER, SPRING 14	2							
10	1	26106-100162	BOLT, M10X 16 PLATED	4							
11	1	26716-120002	NUT, M12	2							
12	1	26716-140002	NUT, M14	2							

N:Old $\overset{\text{Yes}}{\underset{\text{No}}{\leftrightarrows}}$ New, Q:Old $\overset{\text{No}}{\underset{\text{Yes}}{\leftrightarrows}}$ New, R:Old $\overset{\text{Yes}}{\underset{\text{Yes}}{\leftrightarrows}}$ New, S:Old $\overset{\text{No}}{\underset{\text{No}}{\leftrightarrows}}$ New, W:Add, Z:Discontinued, F:Interchangeable by set, K:Q'ty Change

Copyright (C) 2017 YANMAR GLOBAL CS CO., LTD. All RightsReserved.

Fig.158. SEAT COVER

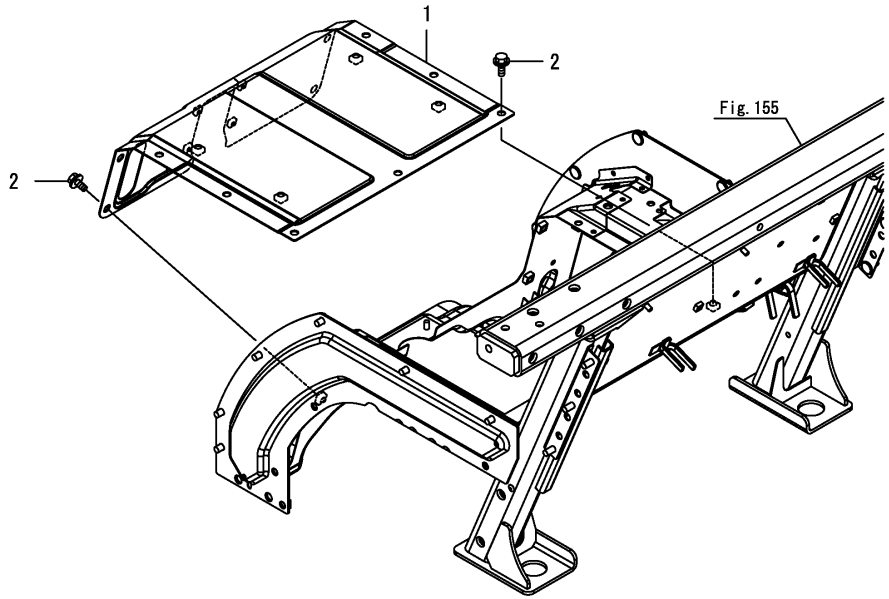

(A)=YT235Y, EU (D)=
(B)= (E)=
(C)= (F)=

No.	Lev.	Parts No.	Description	Q'ty (A)	(B)	(C)	(D)	(E)	(F)	I	R
1	1	1A8405-62910	COVER, SEAT	1							
2	1	26106-080162	BOLT, M8X 16 PLATED	11							

N:Old $\overset{\text{Yes}}{\underset{\text{No}}{\leftrightarrows}}$ New, Q:Old $\overset{\text{No}}{\underset{\text{Yes}}{\leftrightarrows}}$ New, R:Old $\overset{\text{Yes}}{\underset{\text{Yes}}{\leftrightarrows}}$ New, S:Old $\overset{\text{No}}{\underset{\text{No}}{\leftrightarrows}}$ New, W:Add, Z:Discontinued, F:Interchangeable by set, K:Q'ty Change

Copyright (C) 2017 YANMAR GLOBAL CS CO., LTD. All RightsReserved.

Fig.159. SEAT COVER(CABIN)

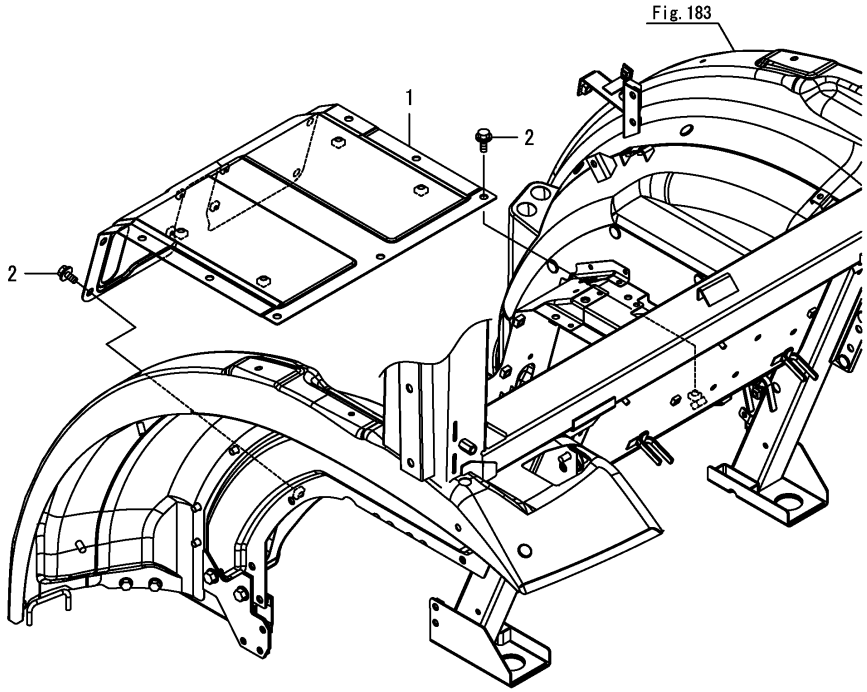

(A)=YT235Y, EU (D)=
(B)= (E)=
(C)= (F)=

No.	Lev.	Parts No.	Description	Q'ty (A)	(B)	(C)	(D)	(E)	(F)	I	R
1	1	1A8405-62910	COVER, SEAT	1							
2	1	26106-080162	BOLT, M8X 16 PLATED	11							

N:Old $\xleftarrow[\text{No}]{\text{Yes}}$ New, Q:Old $\xleftarrow[\text{Yes}]{\text{No}}$ New, R:Old $\xleftarrow[\text{Yes}]{\text{Yes}}$ New, S:Old $\xleftarrow[\text{No}]{\text{No}}$ New, W:Add, Z:Discontinued, F:Interchangeable by set, K:Q'ty Change

Copyright (C) 2017 YANMAR GLOBAL CS CO., LTD. All RightsReserved.

Fig.160. DRIVER SEAT

(A)=YT235Y, EU
(B)=
(C)=
(D)=
(E)=
(F)=

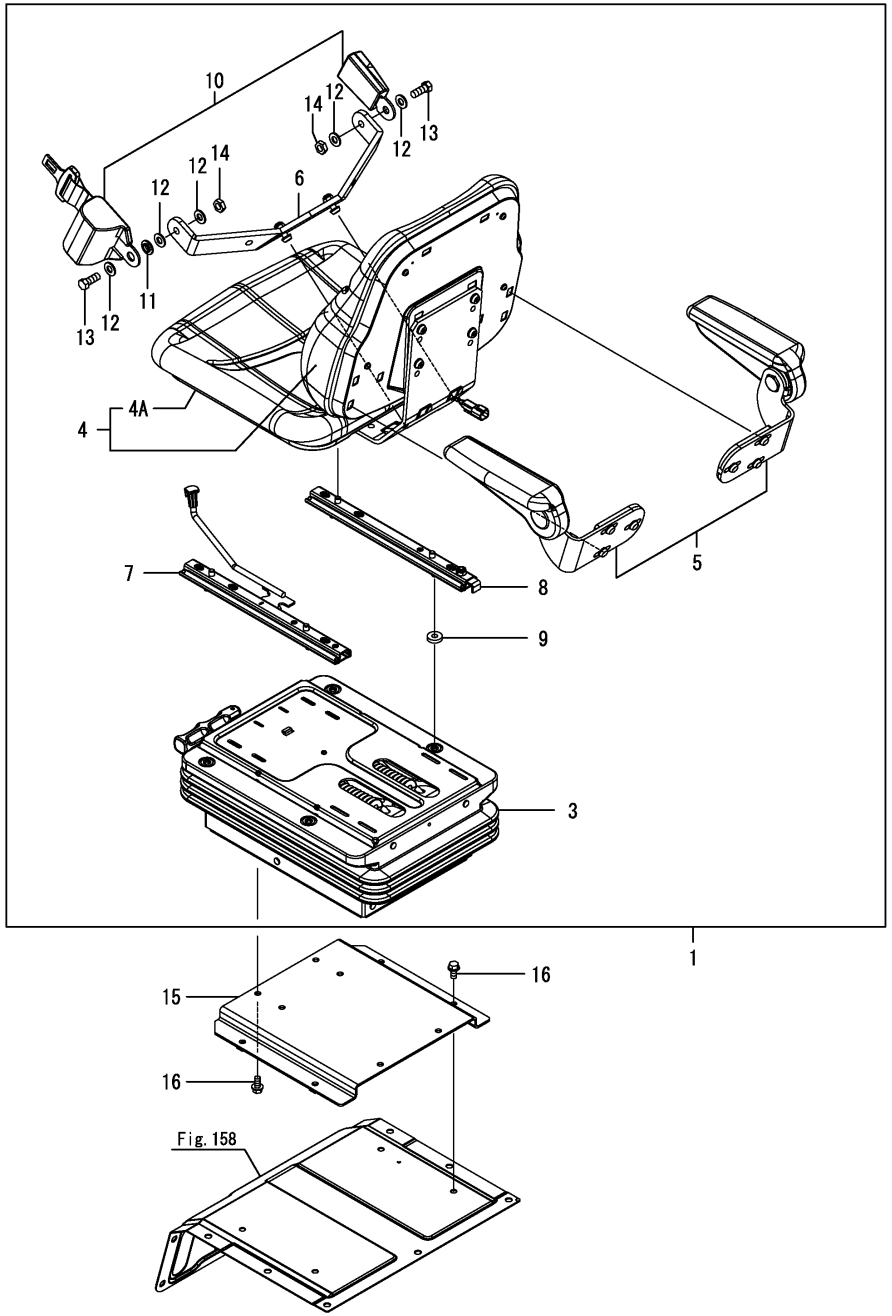

No.	Lev.	Parts No.	Description	Q'ty (A)	(B)	(C)	(D)	(E)	(F)	I	R
1	1	1A8406-63100	SEAT KIT, PVC BLACK	1							
3	2	1A8406-63120	SUSPENSION ASSY,SEAT	1							
4	2	1A8406-63130	SEAT ASSY, PVC BLACK	1							
4A	3	1A842E-63130	SEAT, PVC CUSHION	1							
5	2	1A8406-63140	ARMREST KIT	1							
6	2	1A8406-63160	BRACKET, SEATBELT	1							
7	2	1A8406-63170	RAIL ASSY,L W HANDLE	1							
8	2	1A8406-63180	RAIL ASSY, R	1							
9	2	1A8406-63190	SPACER, SEAT RAIL	4							
10	2	1A8406-63310	SEATBELT ASSY,RETRAC	1							
11	2	1A8406-63340	COLLAR, SEATBELT	1							
12	2	22137-100000	WASHER, 10	5							
13	2	26156-100252	BOLT, M10X 25 PLATED	2							
14	2	26696-100002	NUT, LOCK M10	2							
15	1	1A8406-63110	PLATE, SEAT MOUNT	1							
16	1	26106-080162	BOLT, M8X 16 PLATED	8							

N:Old $\xleftrightarrow[\text{No}]{\text{Yes}}$ New, Q:Old $\xleftrightarrow[\text{Yes}]{\text{No}}$ New, R:Old $\xleftrightarrow[\text{Yes}]{\text{Yes}}$ New, S:Old $\xleftrightarrow[\text{No}]{\text{No}}$ New, W:Add, Z:Discontinued, F:Interchangeable by set, K:Q'ty Change

Copyright (C) 2017 YANMAR GLOBAL CS CO., LTD. All RightsReserved.

Fig.161. REARVIEW MIRROR

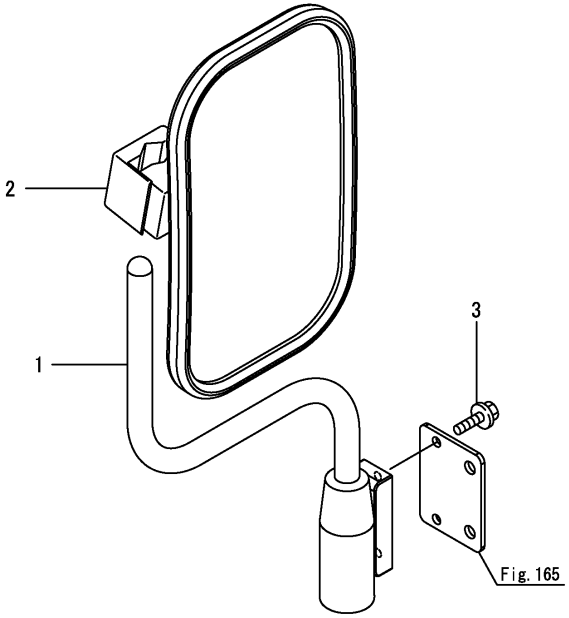

(A)=YT235Y, EU (D)=
(B)= (E)=
(C)= (F)=

No.	Lev.	Parts No.	Description	Q'ty (A)	(B)	(C)	(D)	(E)	(F)	I	R
1	1	1A8300-61750	ARM ASSY, MIRROR	2							
2	1	1A7100-64110	MIRROR ASSY,REARVIEW	2							
3	1	26106-060162	BOLT, M6X 16 PLATED	4							

N:Old $\xleftrightarrow[\text{No}]{\text{Yes}}$ New, Q:Old $\xleftrightarrow[\text{Yes}]{\text{No}}$ New, R:Old $\xleftrightarrow[\text{Yes}]{\text{Yes}}$ New, S:Old $\xleftrightarrow[\text{No}]{\text{No}}$ New, W:Add, Z:Discontinued, F:Interchangeable by set, K:Q'ty Change

Copyright (C) 2017 YANMAR GLOBAL CS CO., LTD. All RightsReserved.

Fig.162. DUST GUARD

(A)=YT235Y, EU
(B)=
(C)=
(D)=
(E)=
(F)=

No.	Lev.	Parts No.	Description	Q'ty (A)	(B)	(C)	(D)	(E)	(F)	I	R
1	1	1A7450-62320	RIVET, NYLON	16							
2	1	1A8406-62330	GUARD, FOOT	2							

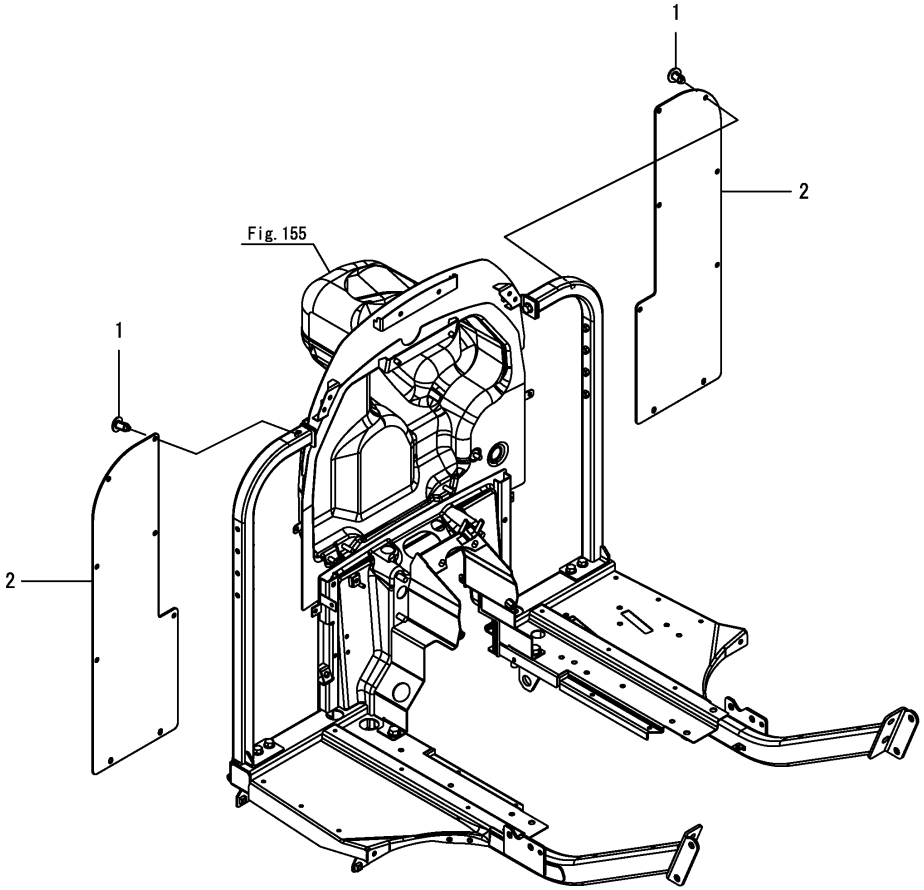

N:Old $\xleftarrow[\text{No}]{\text{Yes}}$ New, Q:Old $\xleftarrow[\text{Yes}]{\text{No}}$ New, R:Old $\xleftarrow[\text{Yes}]{\text{Yes}}$ New, S:Old $\xleftarrow[\text{No}]{\text{No}}$ New, W:Add, Z:Discontinued, F:Interchangeable by set, K:Q'ty Change

Copyright (C) 2017 YANMAR GLOBAL CS CO., LTD. All RightsReserved.

Fig.163. FENDER LOWER COVER

(A)=YT235Y, EU
(B)=
(C)=
(D)=
(E)=
(F)=

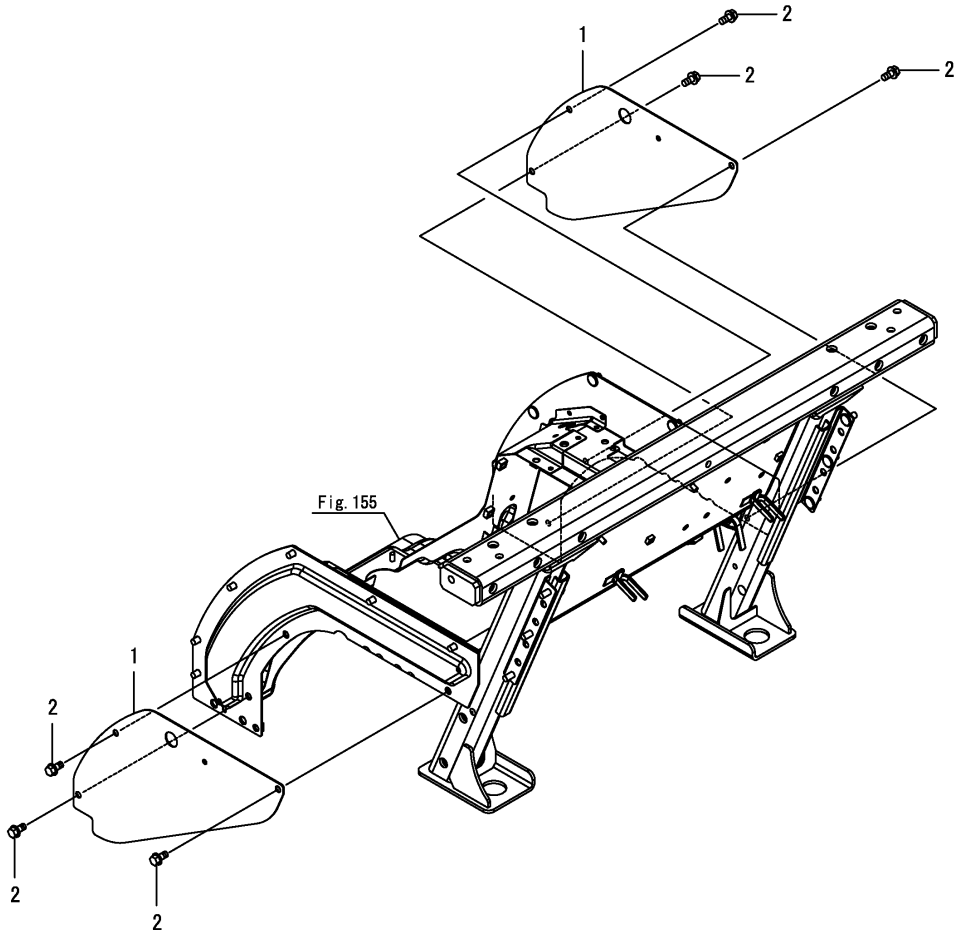

No.	Lev.	Parts No.	Description	Q'ty (A)	(B)	(C)	(D)	(E)	(F)	I	R
1	1	1A8406-62470	COVER, FENDER LOWER	2							
2	1	26106-080162	BOLT, M8X 16 PLATED	6							

N:Old $\frac{\text{Yes}}{\text{No}}$ New, Q:Old $\frac{\text{No}}{\text{Yes}}$ New, R:Old $\frac{\text{Yes}}{\text{Yes}}$ New, S:Old $\frac{\text{No}}{\text{No}}$ New, W:Add, Z:Discontinued, F:Interchangeable by set, K:Q'ty Change

Copyright (C) 2017 YANMAR GLOBAL CS CO., LTD. All RightsReserved.

Fig.164. FENDER LOWER COVER(CABIN)

(A)=YT235Y, EU
(B)=
(C)=
(D)=
(E)=
(F)=

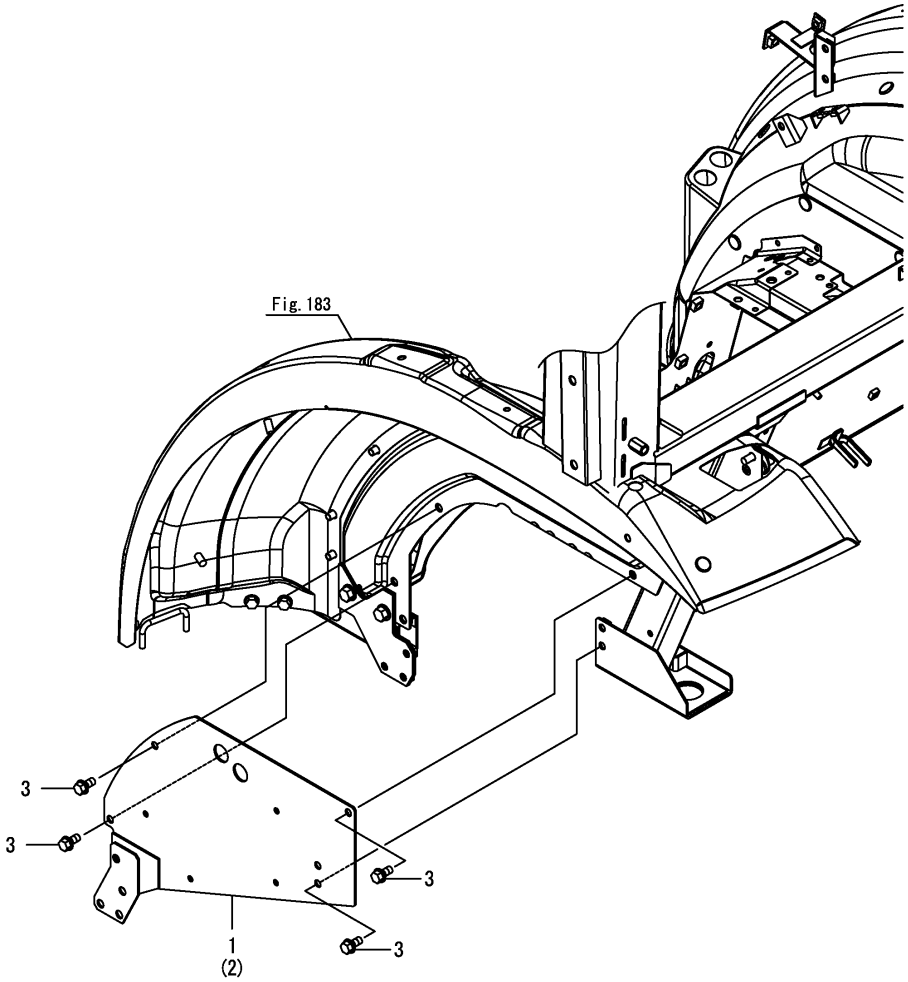

No.	Lev.	Parts No.	Description	Q'ty (A)	(B)	(C)	(D)	(E)	(F)	I	R
1	1	1A8425-62160	COVER ASSY, FENDER L	1							
2	1	1A8425-62170	COVER ASSY, FENDER R	1							
3	1	26106-080162	BOLT, M8X 16 PLATED	18							

N:Old $\xleftarrow[\text{No}]{\text{Yes}}$ New, Q:Old $\xleftarrow[\text{Yes}]{\text{No}}$ New, R:Old $\xleftarrow[\text{Yes}]{\text{Yes}}$ New, S:Old $\xleftarrow[\text{No}]{\text{No}}$ New, W:Add, Z:Discontinued, F:Interchangeable by set, K:Q'ty Change

Copyright (C) 2017 YANMAR GLOBAL CS CO., LTD. All RightsReserved.

Fig.165. FLOOR GUARD

(A)=YT235Y, EU
(B)=
(C)=
(D)=
(E)=
(F)=

No.	Lev.	Parts No.	Description	Q'ty (A)	(B)	(C)	(D)	(E)	(F)	I	R
1	1	1A8406-62300	PLATE, MIRROR	2							
2	1	1A8400-64300	RUBBER,	1							
3	1	1E6760-74150	CAP, HOLE 8	4							
4	1	26106-080452	BOLT, M8X 45 PLATED	4							

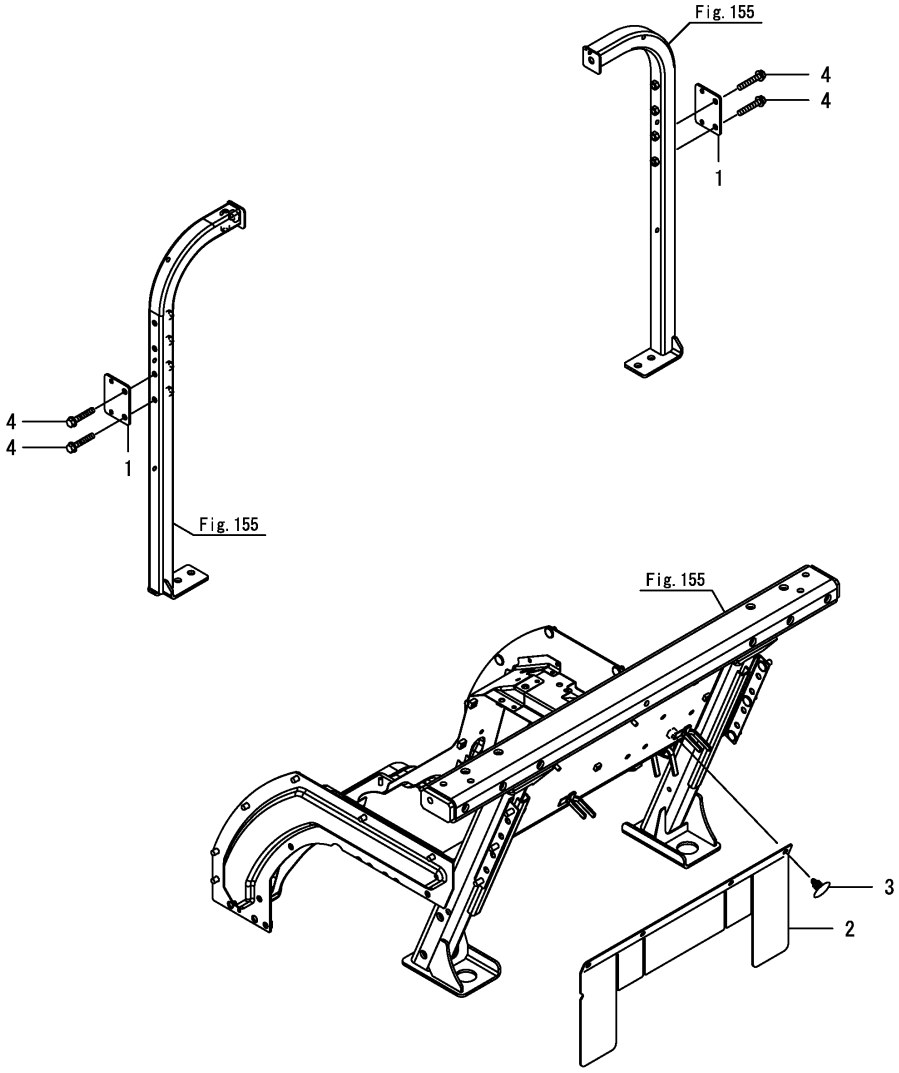

N:Old $\xleftarrow[\text{No}]{\text{Yes}}$ New, Q:Old $\xleftarrow[\text{Yes}]{\text{No}}$ New, R:Old $\xleftarrow[\text{Yes}]{\text{Yes}}$ New, S:Old $\xleftarrow[\text{No}]{\text{No}}$ New, W:Add, Z:Discontinued, F:Interchangeable by set, K:Q'ty Change

Copyright (C) 2017 YANMAR GLOBAL CS CO., LTD. All RightsReserved.

Fig.166. ASSIST GRIP

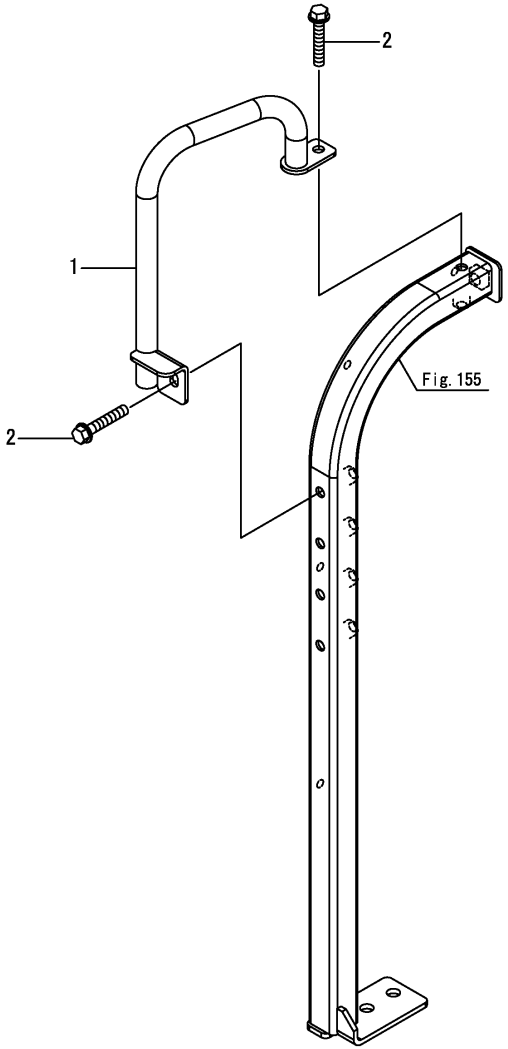

(A)=YT235Y, EU
(B)=
(C)=
(D)=
(E)=
(F)=

No.	Lev.	Parts No.	Description	Q'ty (A)	(B)	(C)	(D)	(E)	(F)	I	R
1	1	1A8406-82501	PIPE ASSY, GRIP	1							
2	1	26106-080452	BOLT, M8X 45 PLATED	2							

N:Old $\xleftrightarrow[\text{No}]{\text{Yes}}$ New, Q:Old $\xleftrightarrow[\text{Yes}]{\text{No}}$ New, R:Old $\xleftrightarrow[\text{Yes}]{\text{Yes}}$ New, S:Old $\xleftrightarrow[\text{No}]{\text{No}}$ New, W:Add, Z:Discontinued, F:Interchangeable by set, K:Q'ty Change

Copyright (C) 2017 YANMAR GLOBAL CS CO., LTD. All RightsReserved.

Fig.167. LABEL(1)

(A)=YT235Y, EU
(B)=
(C)=
(D)=
(E)=
(F)=

No.	Lev.	Parts No.	Description	Q'ty (A)	(B)	(C)	(D)	(E)	(F)	I	R
1	1	1A8405-65050	LABEL, MODEL YT235	2							

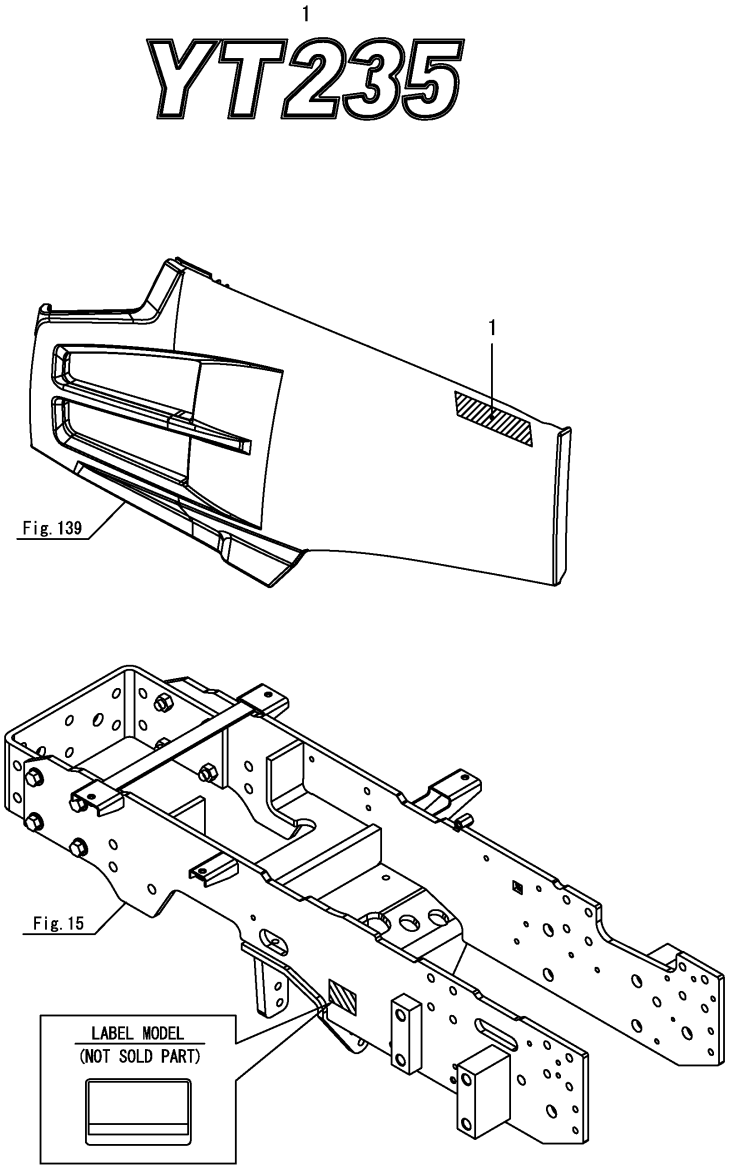

N:Old $\xleftarrow[\text{No}]{\text{Yes}}$ New, Q:Old $\xleftarrow[\text{Yes}]{\text{No}}$ New, R:Old $\xleftarrow[\text{Yes}]{\text{Yes}}$ New, S:Old $\xleftarrow[\text{No}]{\text{No}}$ New, W:Add, Z:Discontinued, F:Interchangeable by set, K:Q'ty Change

Copyright (C) 2017 YANMAR GLOBAL CS CO., LTD. All RightsReserved.

Fig.168. LABEL(2)

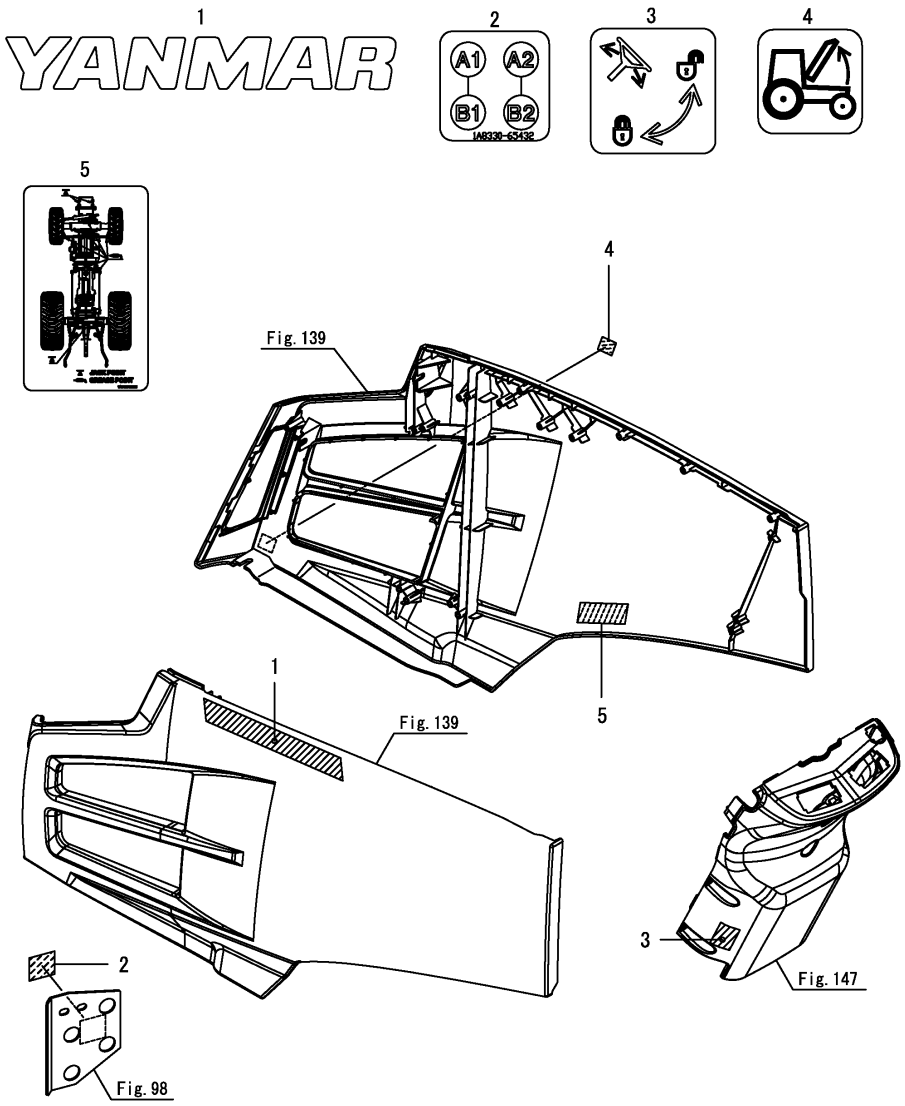

(A)=YT235Y, EU
(B)=
(C)=
(D)=
(E)=
(F)=

No.	Lev.	Parts No.	Description	Q'ty (A)	(B)	(C)	(D)	(E)	(F)	I	R
1	1	1A8475-65010	MARK, YANMAR	2							
2	1	1A8330-65432	LABEL, SCV COUPLER	1							
3	1	1A8060-65560	LABEL, TILT WHEEL	1							
4	1	1A8406-65270	LABEL, TOOL OPEN	1							
5	1	1A8406-65400	LABEL, JACKING	1							

N:Old $\xleftarrow[\text{No}]{\text{Yes}}$ New, Q:Old $\xleftarrow[\text{Yes}]{\text{No}}$ New, R:Old $\xleftarrow[\text{Yes}]{\text{Yes}}$ New, S:Old $\xleftarrow[\text{No}]{\text{No}}$ New, W:Add, Z:Discontinued, F:Interchangeable by set, K:Q'ty Change

Copyright (C) 2017 YANMAR GLOBAL CS CO., LTD. All RightsReserved.

Fig.169. LABEL(3)

(A)=YT235Y, EU
(B)=
(C)=
(D)=
(E)=
(F)=

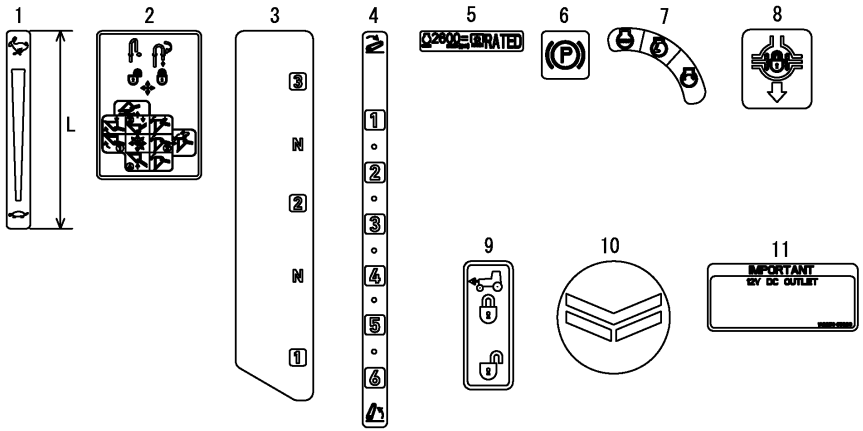

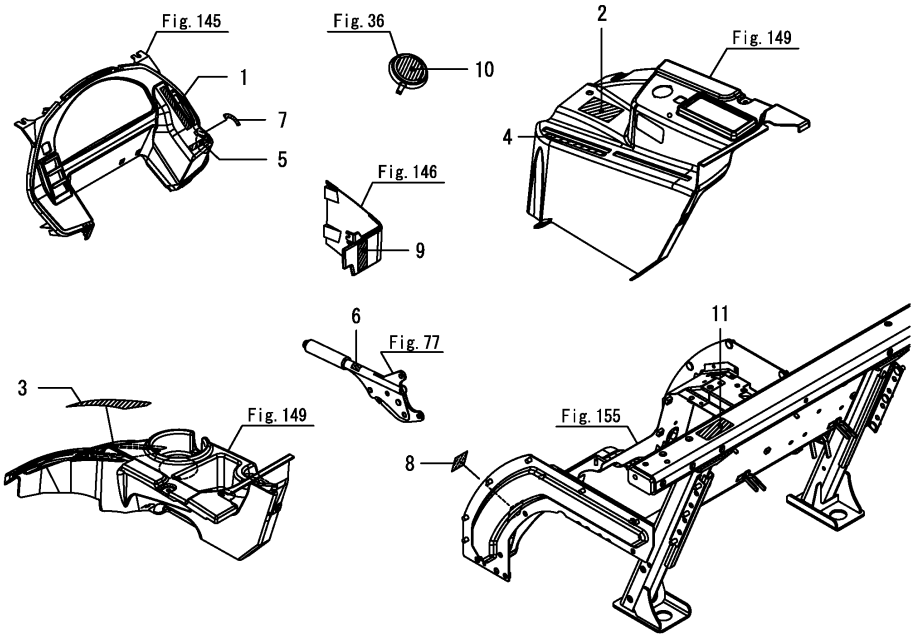

No.	Lev.	Parts No.	Description	Q'ty (A)	(B)	(C)	(D)	(E)	(F)	I	R
1	1	1A8060-65310	LABEL, ACCELERATOR	1							
2	1	1A8400-65320	LABEL, SCV LEVER	1							
3	1	1A8406-65351	LABEL, SUB SHIFT	1							
4	1	1A8406-65370	LABEL, POSITION	1							
5	1	1A8405-65800	LABEL, PTO SPEED	1							
6	1	1A7874-65470	LABEL, PARKING BRAKE	1							
7	1	1A8405-65510	LABEL, KEY SWITCH	1							
8	1	1A8060-65560	LABEL, TILT WHEEL	1							
9	1	1A8060-65590	LABEL, DIFF.LOCK	1							
10	1	1A8160-65630	LABEL, CRUISE	1							
10-1	1	1A8480-65780	LABEL, STG WHEEL	1						N	
	(A=F100416)										
11	1	1A8060-65780	LABEL,STEERING WHEEL	1							
12	1	1A8250-65630	LABEL, SOCKET	1							

N:Old $\xleftarrow[\text{No}]{\text{Yes}}$ New, Q:Old $\xleftarrow[\text{Yes}]{\text{No}}$ New, R:Old $\xleftarrow[\text{Yes}]{\text{Yes}}$ New, S:Old $\xleftarrow[\text{No}]{\text{No}}$ New, W:Add, Z:Discontinued, F:Interchangeable by set, K:Q'ty Change

Copyright (C) 2017 YANMAR GLOBAL CS CO., LTD. All RightsReserved.

Fig.170. LABEL(3)(CABIN)

(A)=YT235Y, EU
(B)=
(C)=
(D)=
(E)=
(F)=

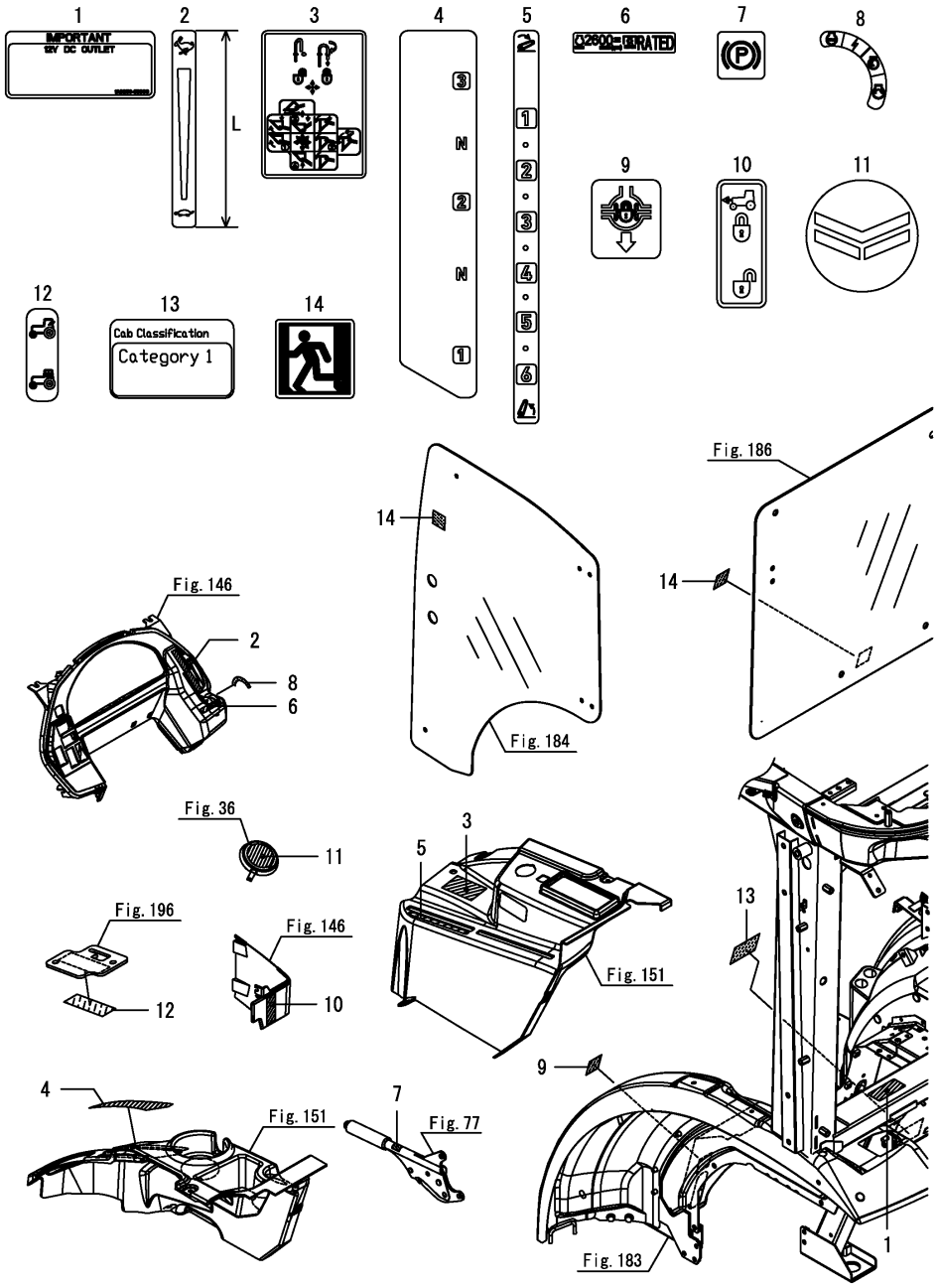

No.	Lev.	Parts No.	Description	Q'ty (A)	(B)	(C)	(D)	(E)	(F)	I	R
1	1	1A8250-65630	LABEL, SOCKET	1							
2	1	1A8060-65310	LABEL, ACCELERATOR	1							
3	1	1A8400-65320	LABEL, SCV LEVER	1							
4	1	1A8406-65351	LABEL, SUB SHIFT	1							
5	1	1A8406-65370	LABEL, POSITION	1							
6	1	1A8405-65800	LABEL, PTO SPEED	1							
7	1	1A7874-65470	LABEL, PARKING BRAKE	1							
8	1	1A8425-65510	LABEL, KEY SWITCH	1							
9	1	1A8060-65590	LABEL, DIFF.LOCK	1							
10	1	1A8160-65630	LABEL, CRUISE	1							
11	1	1A8060-65780	LABEL,STEERING WHEEL	1							
11-1	1	1A8480-65780	LABEL, STG WHEEL	1						N	
	(A=F100416)										
12	1	1A8420-65791	LABEL, OUTSIDE AIR	1							
13	1	198287-65200	LABEL, CAB CAT.	1							
14	1	1A8476-65300	LABEL, EXIT	2							

N:Old $\frac{\text{Yes}}{\text{No}}$ New, Q:Old $\frac{\text{No}}{\text{Yes}}$ New, R:Old $\frac{\text{Yes}}{\text{Yes}}$ New, S:Old $\frac{\text{No}}{\text{No}}$ New, W:Add, Z:Discontinued, F:Interchangeable by set, K:Q'ty Change

Copyright (C) 2017 YANMAR GLOBAL CS CO., LTD. All RightsReserved.

Fig.171. LABEL(SAFETY)(1)

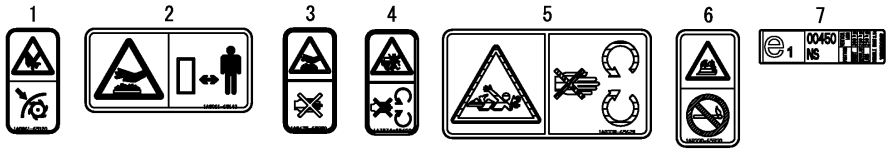

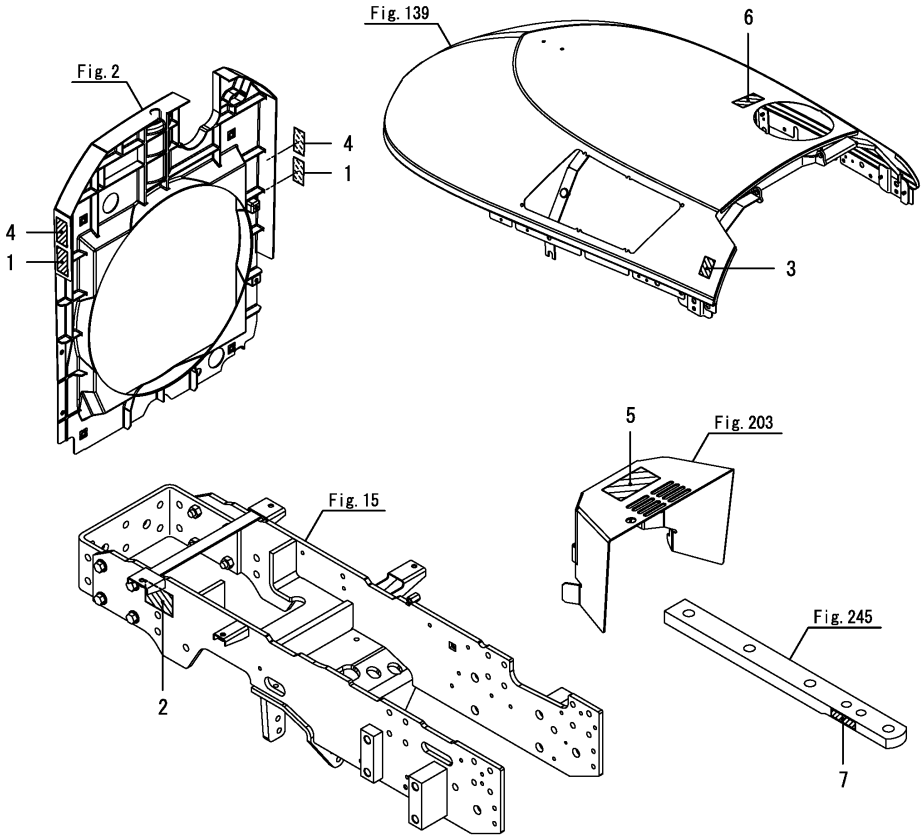

(A)=YT235Y, EU
(B)=
(C)=
(D)=
(E)=
(F)=

No.	Lev.	Parts No.	Description	Q'ty (A)	(B)	(C)	(D)	(E)	(F)	I	R
1	1	1A8061-65120	LABEL, SAFETY COVER	2							
2	1	1A8061-65140	LABEL, SAFETY HOT	1							
3	1	1A8475-65250	LABEL, CAUTION HOT	1							
4	1	1A7874-65400	LABEL, FAN WARNING	2							
5	1	1A8330-65620	LABEL, DANGER SHAFT	1							
6	1	1A8330-65930	LABEL, WARNING FIRE	1							
7	1	1A8406-65210	LABEL, DRAWBAR	1							

N:Old $\xleftarrow[\text{No}]{\text{Yes}}$ New, Q:Old $\xleftarrow[\text{Yes}]{\text{No}}$ New, R:Old $\xleftarrow[\text{Yes}]{\text{Yes}}$ New, S:Old $\xleftarrow[\text{No}]{\text{No}}$ New, W:Add, Z:Discontinued, F:Interchangeable by set, K:Q'ty Change

Copyright (C) 2017 YANMAR GLOBAL CS CO., LTD. All RightsReserved.

Fig.172. LABEL(SAFETY)(2)

(A)=YT235Y, EU
(B)=
(C)=
(D)=
(E)=
(F)=

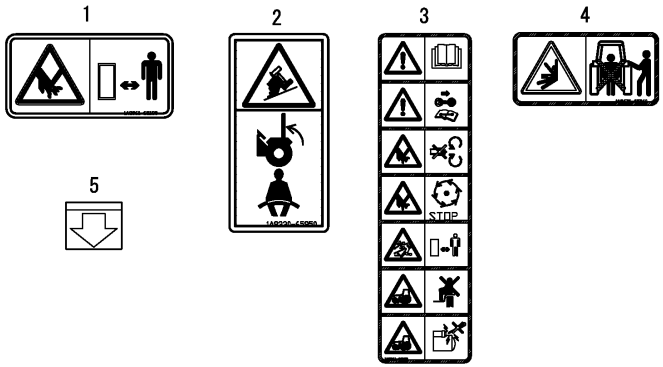

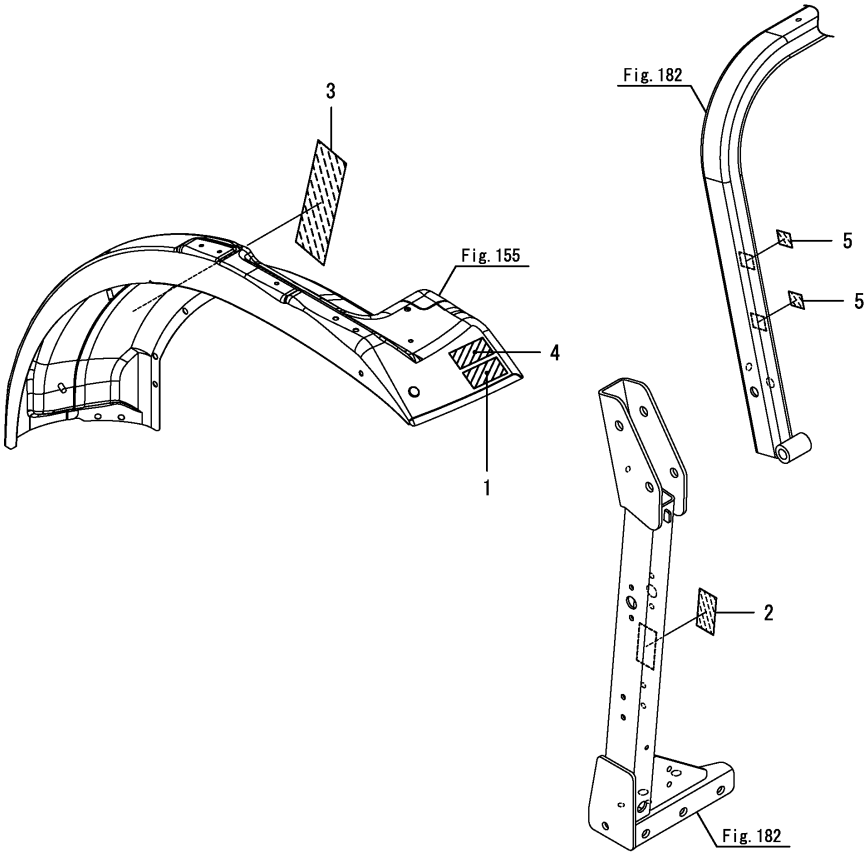

No.	Lev.	Parts No.	Description	Q'ty (A)	(B)	(C)	(D)	(E)	(F)	I	R
1	1	1A8061-65130	LABEL, SAFETY HYD	1							
2	1	1A8330-65950	LABEL, SEATBELT	1							
3	1	1A8061-65100	LABEL, SAFETY	1							
4	1	1A8476-65240	LABEL, SAFETY REAR	1							
5	1	1A8406-65500	LABEL, ARROW & LINE	2						W	
	(A=*2020.05)										

N:Old $\xleftarrow[\text{No}]{\text{Yes}}$ New, Q:Old $\xleftarrow[\text{Yes}]{\text{No}}$ New, R:Old $\xleftarrow[\text{Yes}]{\text{Yes}}$ New, S:Old $\xleftarrow[\text{No}]{\text{No}}$ New, W:Add, Z:Discontinued, F:Interchangeable by set, K:Q'ty Change

Copyright (C) 2017 YANMAR GLOBAL CS CO., LTD. All RightsReserved.

Fig.173. LABEL(SAFETY)(2)(CABIN)

(A)=YT235Y, EU
(B)=
(C)=
(D)=
(E)=
(F)=

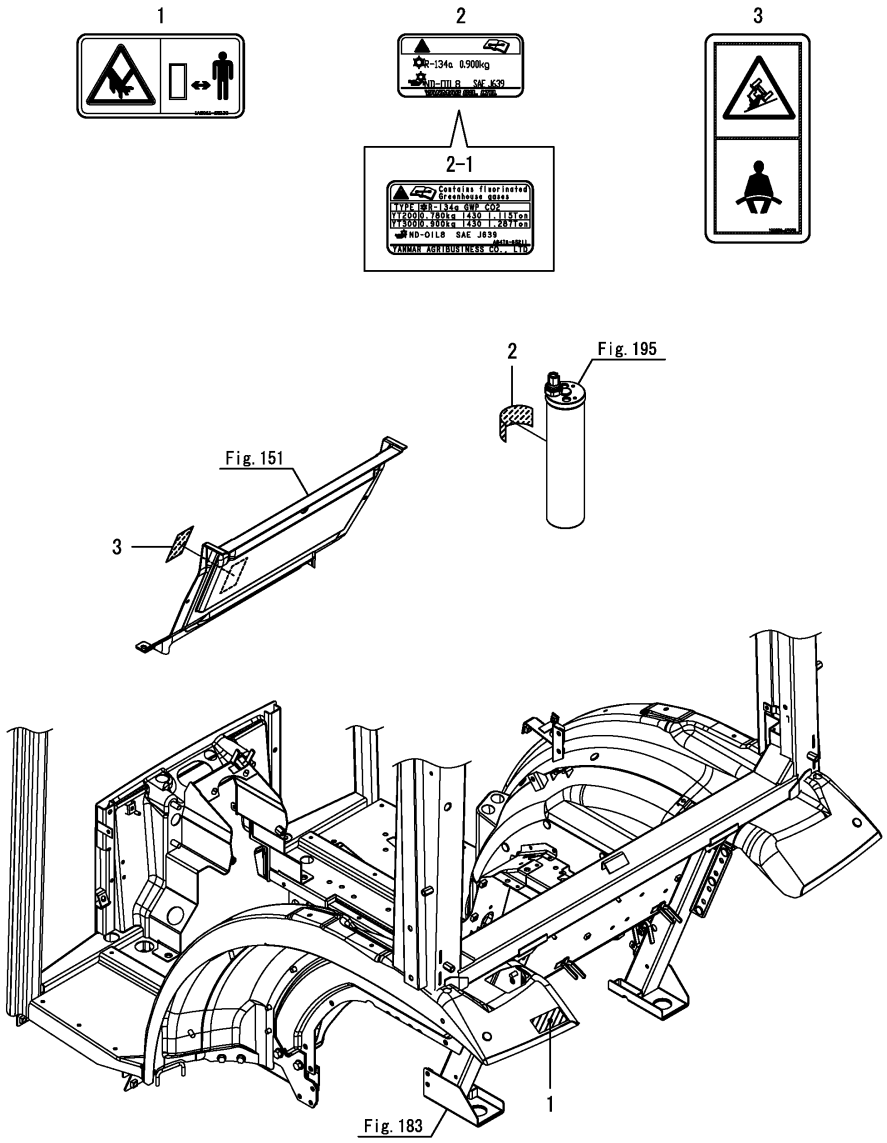

No.	Lev.	Parts No.	Description	Q'ty (A)	(B)	(C)	(D)	(E)	(F)	I	R
1	1	1A8061-65130	LABEL, SAFETY HYD	1							
2	1	1A8476-65210	LABEL, FREON	1							
2-1	1	1A8476-65211	LABEL, FREON	1						S	
	(A=F100105)										
3	1	198280-65950	LABEL, SEATBELT	1							

N:Old $\xleftarrow[\text{No}]{\text{Yes}}$ New, Q:Old $\xleftarrow[\text{Yes}]{\text{No}}$ New, R:Old $\xleftarrow[\text{Yes}]{\text{Yes}}$ New, S:Old $\xleftarrow[\text{No}]{\text{No}}$ New, W:Add, Z:Discontinued, F:Interchangeable by set, K:Q'ty Change

Copyright (C) 2017 YANMAR GLOBAL CS CO., LTD. All RightsReserved.

Fig.174. LEVER(LEFT)

(A)=YT235Y, EU
(B)=
(C)=
(D)=
(E)=
(F)=

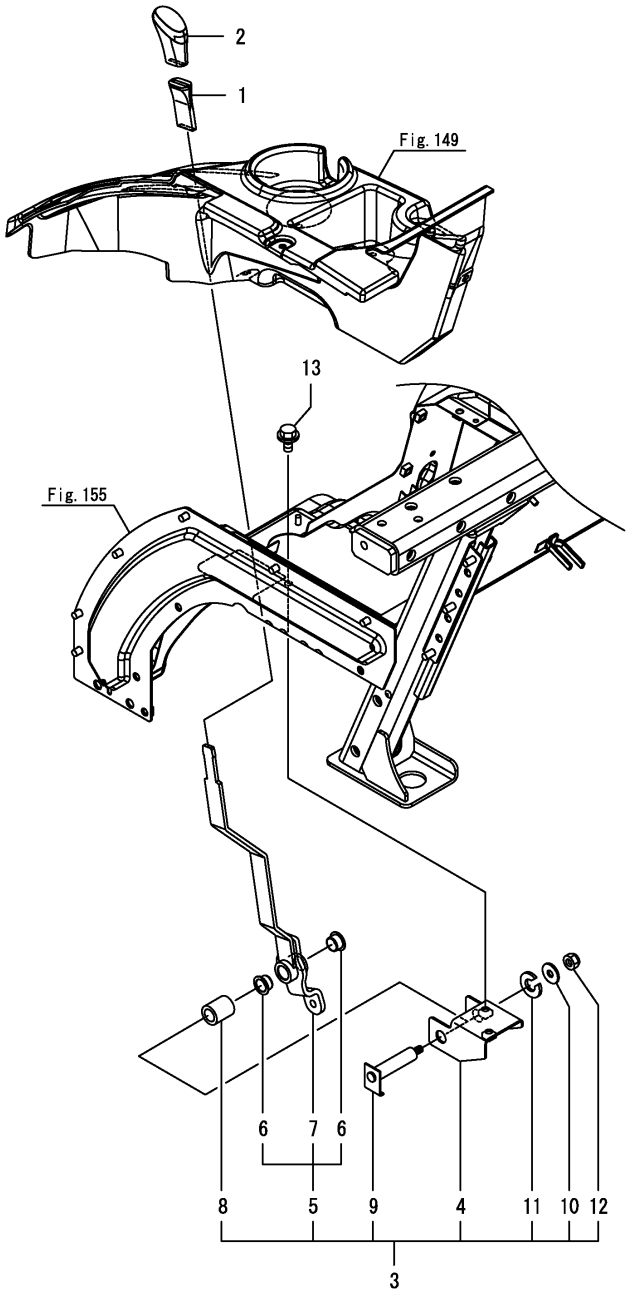

No.	Lev.	Parts No.	Description	Q'ty (A)	(B)	(C)	(D)	(E)	(F)	I	R
1	1	198072-27880	BOOT, SHAFT	1							
2	1	1A8060-67780	KNOB, ORANGE	1							
3	1	1A8426-67800	LEVER UNIT,RENGE	1							
4	2	1A8400-67600	BRACKET ASSY, LEVER	1							
5	2	1A8400-67820	LEVER UNIT, RANGE	1							
6	3	1S6489-63330	BUSH, LFF 1610	2							
7	3	1A8400-67830	LEVER ASSY, RANGE	1							
8	2	1A8426-67840	COLLAR	1							
9	2	1A8400-67970	SHAFT ASSY, LEVER	1							
10	2	22157-080000	WASHER, 8	1							
11	2	22217-160000	WASHER, SPRING 16	1							
12	2	26346-080002	NUT, M8	1							
13	1	26106-080162	BOLT, M8X 16 PLATED	2							

N:Old $\frac{\text{Yes}}{\text{No}}$ New, Q:Old $\frac{\text{No}}{\text{Yes}}$ New, R:Old $\frac{\text{Yes}}{\text{Yes}}$ New, S:Old $\frac{\text{No}}{\text{No}}$ New, W:Add, Z:Discontinued, F:Interchangeable by set, K:Q'ty Change

Copyright (C) 2017 YANMAR GLOBAL CS CO., LTD. All RightsReserved.

Fig.175. LEVER LINK(LEFT)

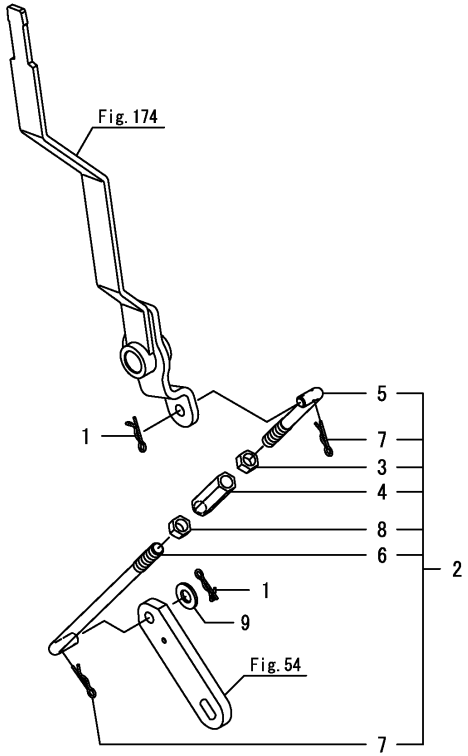

(A)=YT235Y, EU
(B)=
(C)=
(D)=
(E)=
(F)=

No.	Lev.	Parts No.	Description	Q'ty (A)	(B)	(C)	(D)	(E)	(F)	I	R
1	1	1C6281-52320	PIN, SNAP 8	2							
2	1	1A8400-67700	ROD UNIT, RANGE	1							
3	2	194150-22480	NUT, M10 L	1							
4	2	194250-47490	TURNBUCKLE, M10X50	1							
5	2	1A8400-67710	ROD, RANGE L	1							
6	2	1A8400-67720	ROD, RANGE R	1							
7	2	22372-080000	PIN, SNAP 8	2							
8	2	26716-100002	NUT, M10	1							
9	1	22137-100000	WASHER, 10	1							

N:Old $\xleftarrow[\text{No}]{\text{Yes}}$ New, Q:Old $\xleftarrow[\text{Yes}]{\text{No}}$ New, R:Old $\xleftarrow[\text{Yes}]{\text{Yes}}$ New, S:Old $\xleftarrow[\text{No}]{\text{No}}$ New, W:Add, Z:Discontinued, F:Interchangeable by set, K:Q'ty Change

Copyright (C) 2017 YANMAR GLOBAL CS CO., LTD. All RightsReserved.

Fig.176. TOP LINK

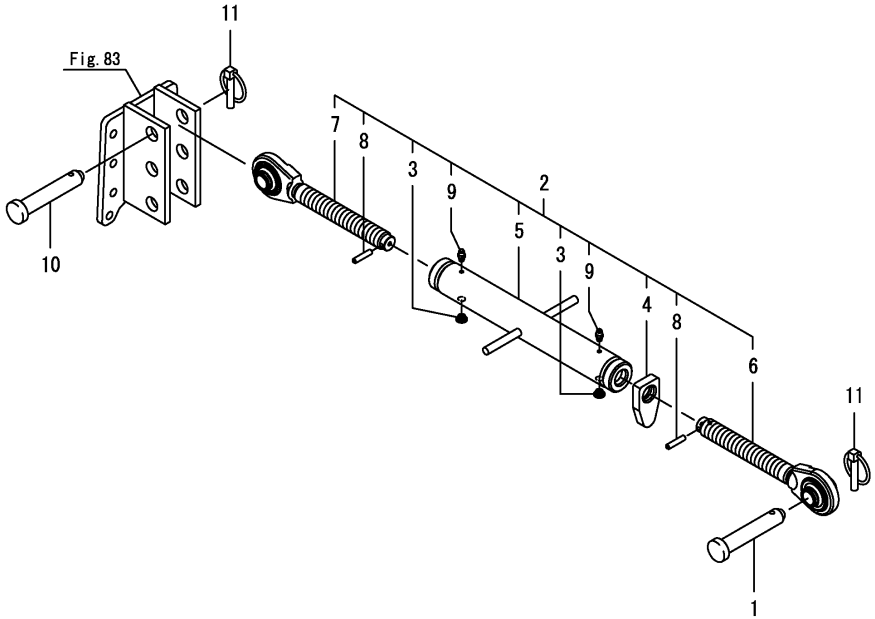

(A)=YT235Y, EU
(B)=
(C)=
(D)=
(E)=
(F)=

No.	Lev.	Parts No.	Description	Q'ty (A)	(B)	(C)	(D)	(E)	(F)	I	R
1	1	195080-15060	PIN, HITCH	1							
2	1	1A8470-71100	LINK ASSY, TOP	1							
3	2	1A7335-71250	CAP	2							
4	2	1A8470-71390	NUT, LOCK R	1							
5	2	1A8470-71500	TUBE ASSY, TOP LINK	1							
6	2	198254-71600	LINK ASSY, TOP R	1							
7	2	198254-71700	LINK ASSY, TOP L	1							
8	2	1A7335-71760	PIN, SPRING 5.0X25	2							
9	2	1A7450-43680	NIPPLE, GRESAE M6	2							
10	1	194150-71230	PIN, TOP LINK	1							
11	1	794130-71410	PIN ASSY,BALL SOCKET	2							

N:Old ←Yes/No→ New, Q:Old ←No/Yes→ New, R:Old ←Yes/Yes→ New, S:Old ←No/No→ New, W:Add, Z:Discontinued, F:Interchangeable by set, K:Q'ty Change

Copyright (C) 2017 YANMAR GLOBAL CS CO., LTD. All RightsReserved.

Fig.177. TOP LINK HOOK

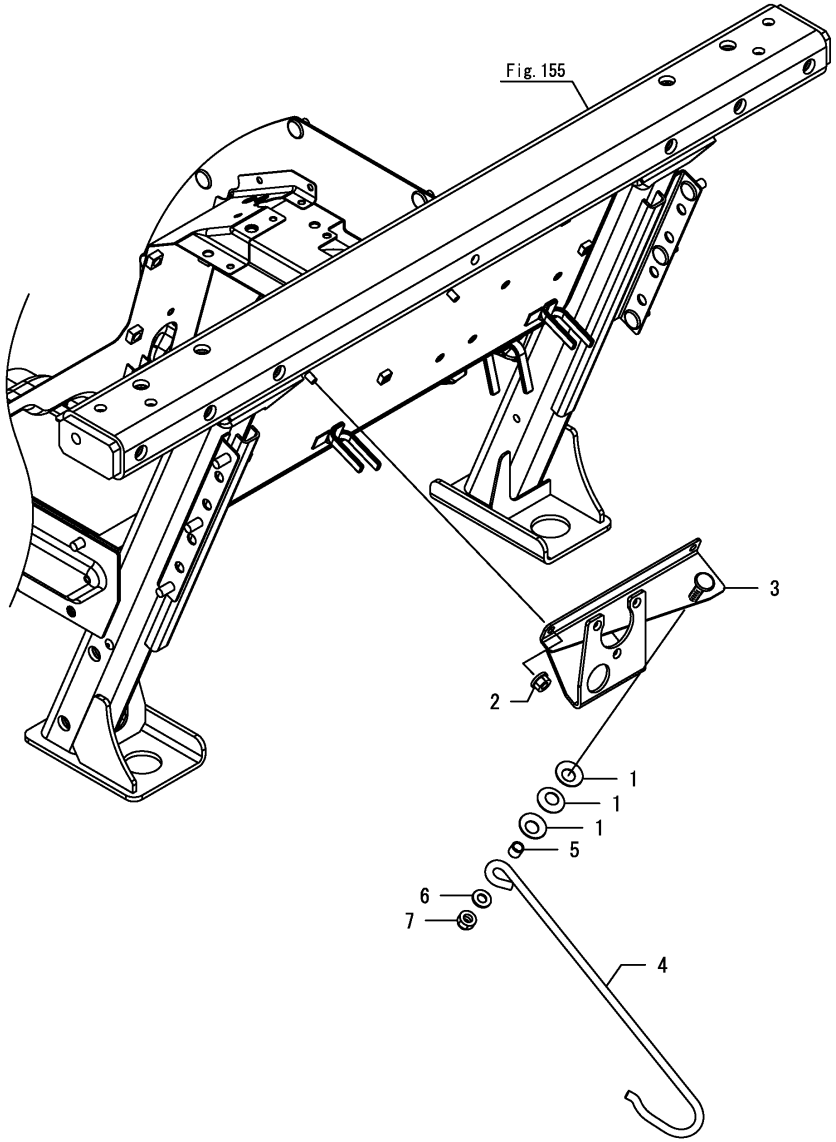

(A)=YT235Y, EU
(B)=
(C)=
(D)=
(E)=
(F)=

No.	Lev.	Parts No.	Description	Q'ty (A)	(B)	(C)	(D)	(E)	(F)	I	R
1	1	198072-18320	SPRING, 12	3							
2	1	194990-22130	NUT, M6	2							
3	1	1A8406-64110	BRACKET ASSY,TOPLINK	1							
4	1	1A8405-71700	HOOK, TOPLINK	1							
5	1	198092-71720	COLLAR, 8.1X10.5X9.3	1							
6	1	22157-080000	WASHER, 8	1							
7	1	26346-080002	NUT, M8	1							

N:Old $\frac{\text{Yes}}{\text{No}}$ New, Q:Old $\frac{\text{No}}{\text{Yes}}$ New, R:Old $\frac{\text{Yes}}{\text{Yes}}$ New, S:Old $\frac{\text{No}}{\text{No}}$ New, W:Add, Z:Discontinued, F:Interchangeable by set, K:Q'ty Change

Copyright (C) 2017 YANMAR GLOBAL CS CO., LTD. All RightsReserved.

Fig.178. LIFT LINK(LEFT)

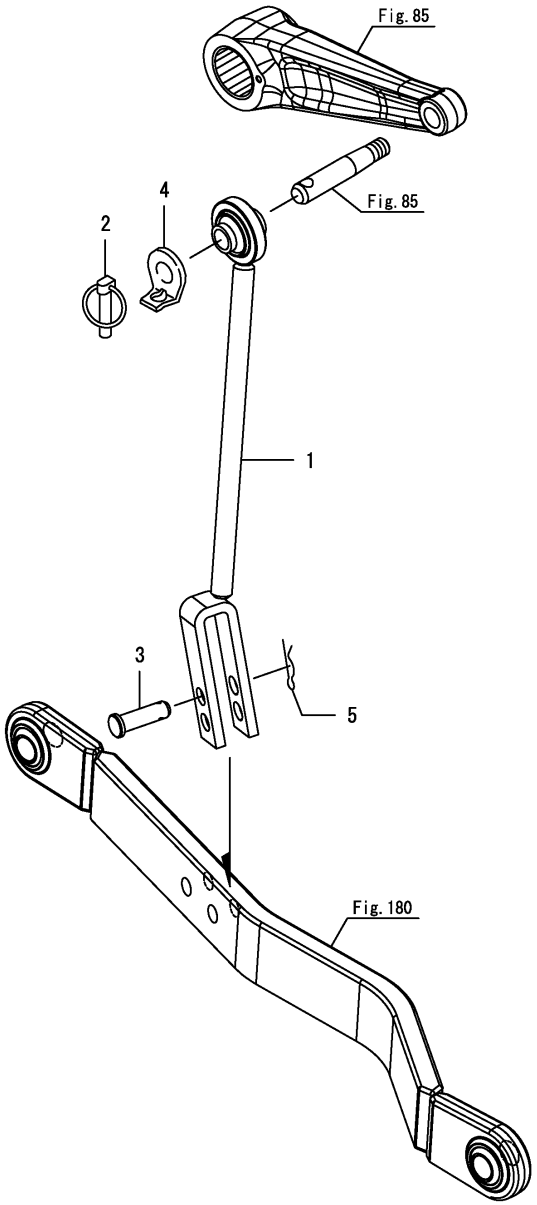

(A)=YT235Y, EU
(B)=
(C)=
(D)=
(E)=
(F)=

No.	Lev.	Parts No.	Description	Q'ty (A)	(B)	(C)	(D)	(E)	(F)	I	R
1	1	1A8405-72352	LINK ASSY, LIFT	1							
2	1	794130-71410	PIN ASSY,BALL SOCKET	1							
3	1	1A8400-72461	PIN,LIFT YOKE	1							
4	1	198071-74970	COLLAR, BALL SOCKET	1							
5	1	22372-160000	PIN, SNAP 16	1							

N:Old $\xleftrightarrow[\text{No}]{\text{Yes}}$ New, Q:Old $\xleftrightarrow[\text{Yes}]{\text{No}}$ New, R:Old $\xleftrightarrow[\text{Yes}]{\text{Yes}}$ New, S:Old $\xleftrightarrow[\text{No}]{\text{No}}$ New, W:Add, Z:Discontinued, F:Interchangeable by set, K:Q'ty Change

Copyright (C) 2017 YANMAR GLOBAL CS CO., LTD. All RightsReserved.

Fig.179. LIFT LINK(RIGHT)

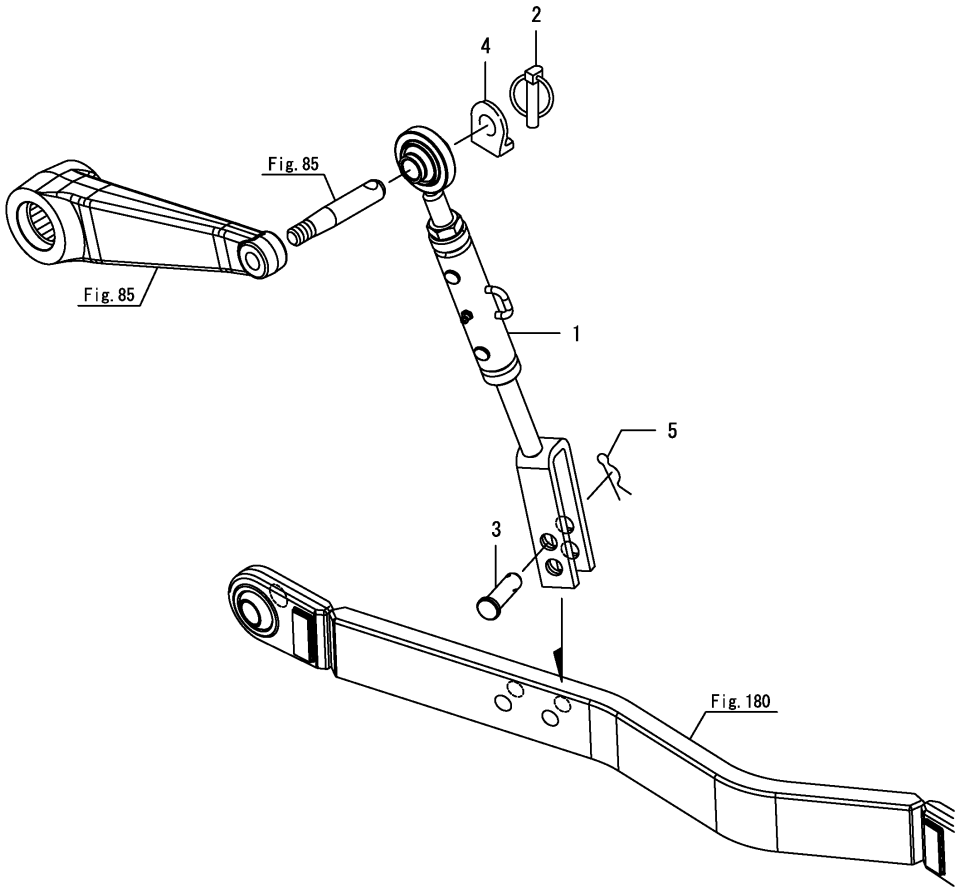

(A)=YT235Y, EU
(B)=
(C)=
(D)=
(E)=
(F)=

No.	Lev.	Parts No.	Description	Q'ty (A)	(B)	(C)	(D)	(E)	(F)	I	R
1	1	1A8405-72152	LINK ASSY, LIFT R	1							
2	1	794130-71410	PIN ASSY,BALL SOCKET	1							
3	1	1A8400-72461	PIN,LIFT YOKE	1							
4	1	198071-74970	COLLAR, BALL SOCKET	1							
5	1	22372-160000	PIN, SNAP 16	1							

N:Old $\xleftarrow[\text{No}]{\text{Yes}}$ New, Q:Old $\xleftarrow[\text{Yes}]{\text{No}}$ New, R:Old $\xleftarrow[\text{Yes}]{\text{Yes}}$ New, S:Old $\xleftarrow[\text{No}]{\text{No}}$ New, W:Add, Z:Discontinued, F:Interchangeable by set, K:Q'ty Change

Copyright (C) 2017 YANMAR GLOBAL CS CO., LTD. All RightsReserved.

Fig.180. LOWER LINK

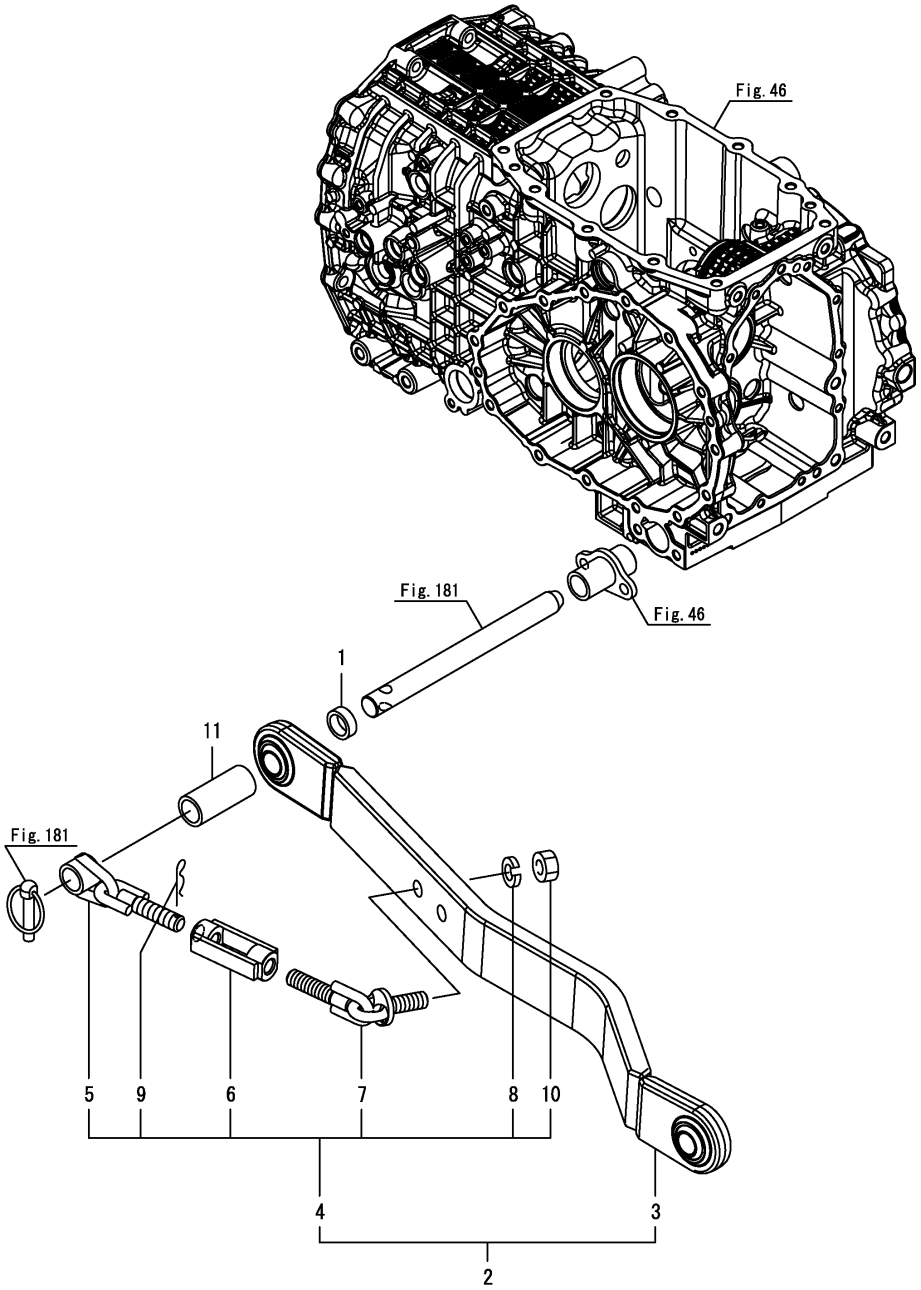

(A)=YT235Y, EU (D)=
(B)= (E)=
(C)= (F)=

No.	Lev.	Parts No.	Description	Q'ty (A)	(B)	(C)	(D)	(E)	(F)	I	R
1	1	1A8405-73230	COLLAR, 22X30X10	2							
2	1	1A8405-73012	LINK KIT,LOWER&CHAIN	2							
3	2	1A8405-73501	LINK ASSY, LOWER	2							
4	2	1A8405-74101	CHAIN ASSY, CHECK	2							
5	3	1A8405-74250	CHAIN ASSY	2							
6	3	1A8405-74400	TURNBUCKLE ASSY	2							
7	3	1A8405-74800	EYE-BOLT ASSY	2							
8	3	1A7500-74680	WASHER, SPRING 16	2							
9	3	1A7335-74610	PIN, SNAP 18	2							
10	3	1A7500-74670	NUT, M16	2							
11	1	1A8101-73210	COLLAR	2							

N:Old $\overset{\text{Yes}}{\underset{\text{No}}{\leftrightarrow}}$ New, Q:Old $\overset{\text{No}}{\underset{\text{Yes}}{\leftrightarrow}}$ New, R:Old $\overset{\text{Yes}}{\underset{\text{Yes}}{\leftrightarrow}}$ New, S:Old $\overset{\text{No}}{\underset{\text{No}}{\leftrightarrow}}$ New, W:Add, Z:Discontinued, F:Interchangeable by set, K:Q'ty Change

Copyright (C) 2017 YANMAR GLOBAL CS CO., LTD. All RightsReserved.

Fig.181. LOWER LINK PIN

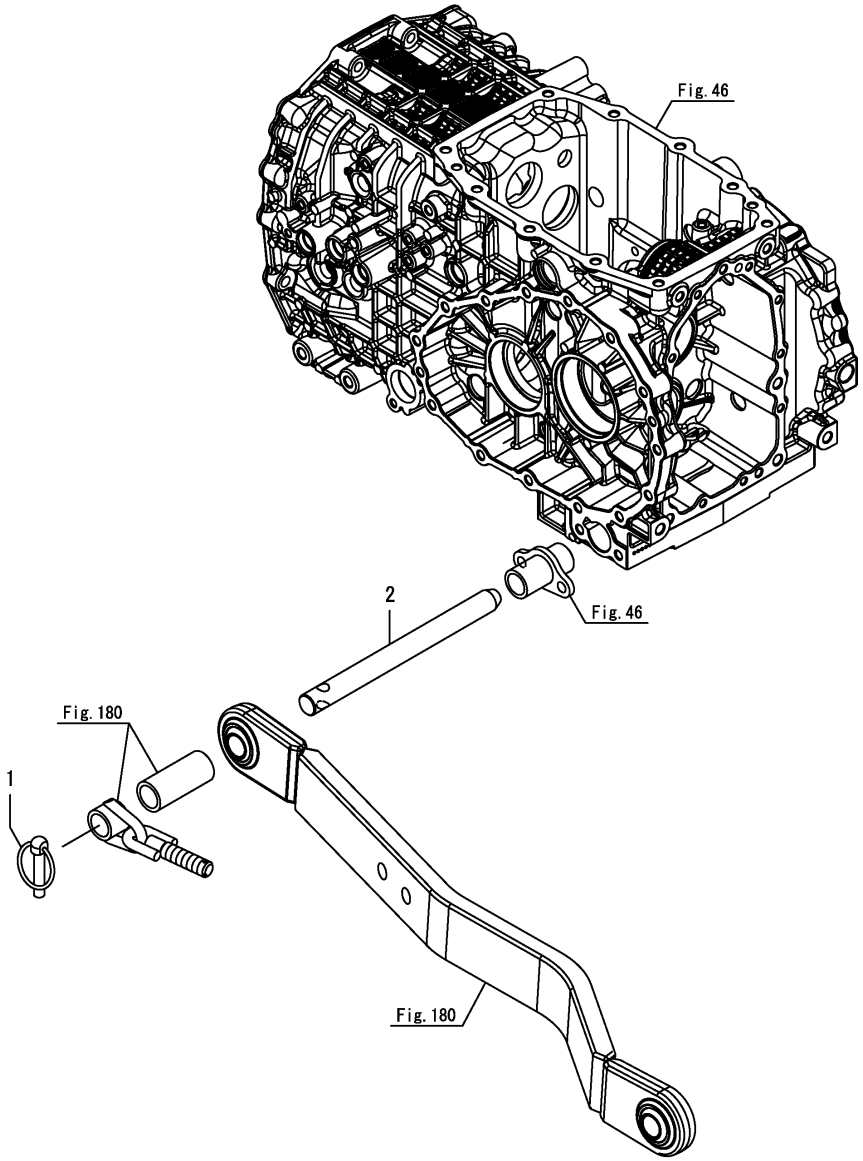

(A)=YT235Y, EU
(B)=
(C)=
(D)=
(E)=
(F)=

No.	Lev.	Parts No.	Description	Q'ty (A)	(B)	(C)	(D)	(E)	(F)	I	R
1	1	794130-71410	PIN ASSY,BALL SOCKET	2							
2	1	198200-73150	PIN, LOWER LINK	2							

N:Old $\frac{\text{Yes}}{\text{No}}$ New, Q:Old $\frac{\text{No}}{\text{Yes}}$ New, R:Old $\frac{\text{Yes}}{\text{Yes}}$ New, S:Old $\frac{\text{No}}{\text{No}}$ New, W:Add, Z:Discontinued, F:Interchangeable by set, K:Q'ty Change

Copyright (C) 2017 YANMAR GLOBAL CS CO., LTD. All RightsReserved.

Fig.182. SAFETY FRAME

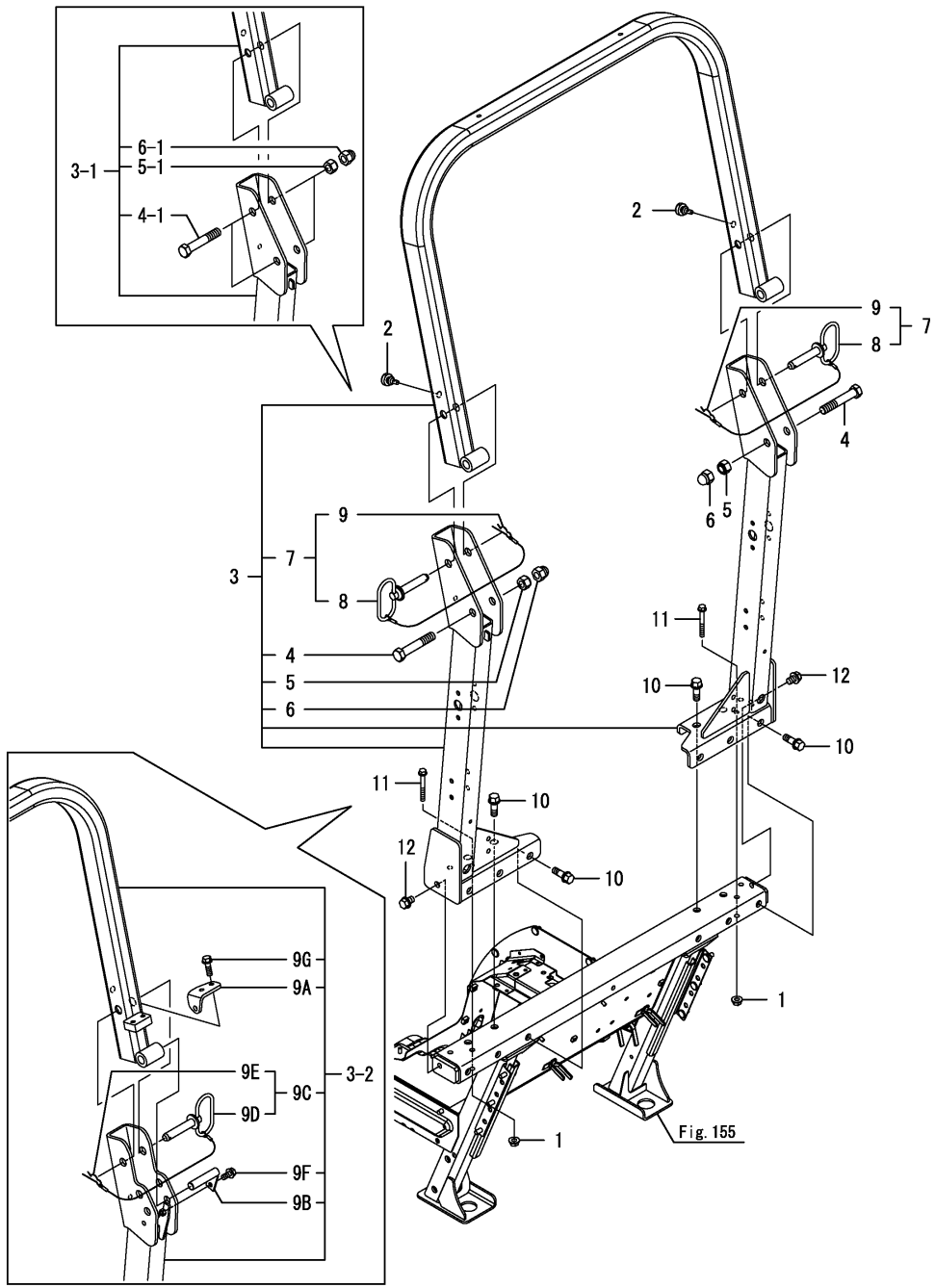

(A)=YT235Y, EU (D)=
(B)= (E)=
(C)= (F)=

No.	Lev.	Parts No.	Description	Q'ty (A)	(B)	(C)	(D)	(E)	(F)	I	R
1	1	194990-22140	NUT, M8	2							
2	1	194330-62530	STOPPER, PEDAL	2							
3	1	1A8406-85090	M ASSY,ROPS	1							
3-1	1	1A8406-85050	M ASSY,ROPS RIGID	1						S	
	(A=F100110)										
3-2	1	1A8406-85060	M ASSY,ROPS FOLDABLE	1						S	
	(A=*2020.05)										
4	2	1A8300-85430	BOLT, M16X90	2							
4-1	2	1A8300-85430	BOLT, M16X90	4						K	
	(A=F100110)										
4-2	2	1A8300-85430	BOLT, M16X90	4						Z	
	(A=*2020.05)										
5	2	1A8300-85440	NUT, M16	2							
5-1	2	1A8300-85440	NUT, M16	4						K	
	(A=F100110)										
5-2	2	1A8300-85440	NUT, M16	4						Z	
	(A=*2020.05)										
6	2	1A8406-85450	NUT, CAP M16	2							
6-1	2	1A8406-85450	NUT, CAP M16	4						K	
	(A=F100110)										
6-2	2	1A8406-85450	NUT, CAP M16	4						Z	
	(A=*2020.05)										
7	2	1A8300-85910	PIN ASSY, STOPPER	2						Z	
	(A=F100110)										
8	3	1A8300-85920	STOPPER ASSY, PIN	2						Z	
	(A=F100110)										
9	3	1A8300-85930	CLIP, PIN	2						Z	
	(A=F100110)										
9A	2	1A8406-85630	PLATE, DAMPER A	1						W	
	(A=*2020.05)										
9B	2	1A8406-85650	PIN ASSY	2						W	
	(A=*2020.05)										
9C	2	1A8300-85910	PIN ASSY, STOPPER	2						W	
	(A=*2020.05)										
9D	3	1A8300-85920	STOPPER ASSY, PIN	2						W	
	(A=*2020.05)										
9E	3	1A8300-85930	CLIP, PIN	2						W	
	(A=*2020.05)										
9F	2	26106-080162	BOLT, M8X 16 PLATED	2						W	
	(A=*2020.05)										
9G	2	26106-080252	BOLT, M8X 25 PLATED	2						W	
	(A=*2020.05)										
10	1	198165-85970	BOLT, M12X35	10							
11	1	26106-080652	BOLT, M8X 65 PLATED	2							
12	1	26106-120162	BOLT, M12X 16 PLATED	2							

N:Old $\xleftarrow[\text{No}]{\text{Yes}}$ New, Q:Old $\xleftarrow[\text{Yes}]{\text{No}}$ New, R:Old $\xleftarrow[\text{Yes}]{\text{Yes}}$ New, S:Old $\xleftarrow[\text{No}]{\text{No}}$ New, W:Add, Z:Discontinued, F:Interchangeable by set, K:Q'ty Change

Copyright (C) 2017 YANMAR GLOBAL CS CO., LTD. All RightsReserved.

Fig.250. ROPS(ASSIST)

(A)=YT235Y, EU
(B)=
(C)=
(D)=
(E)=
(F)=

No.	Lev.	Parts No.	Description	Q'ty (A)	(B)	(C)	(D)	(E)	(F)	I	R
1	1	1A8470-61360	DAMPER, GAS 700	1							
2	1	1C6360-65700	PIN, SNAP 10	2							
3	1	22487-100240	PIN, H10X 24	2							

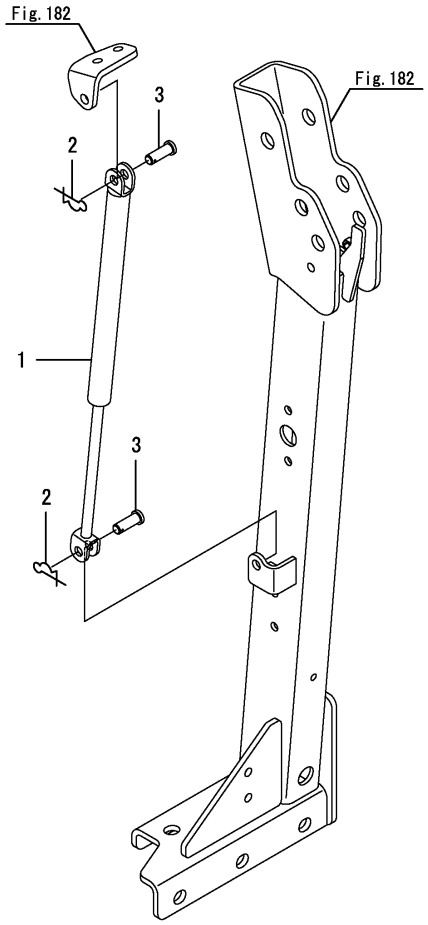

N:Old $\xleftarrow[\text{No}]{\text{Yes}}$ New, Q:Old $\xleftarrow[\text{Yes}]{\text{No}}$ New, R:Old $\xleftarrow[\text{Yes}]{\text{Yes}}$ New, S:Old $\xleftarrow[\text{No}]{\text{No}}$ New, W:Add, Z:Discontinued, F:Interchangeable by set, K:Q'ty Change

Copyright (C) 2017 YANMAR GLOBAL CS CO., LTD. All RightsReserved.

Fig.183. CABIN FRAME

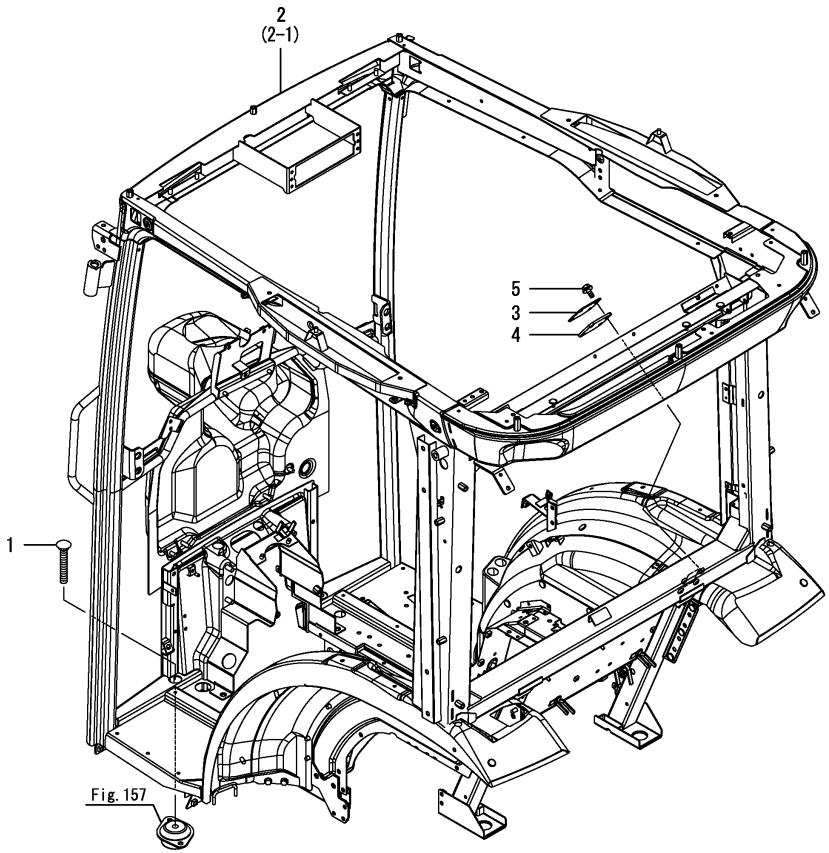

(A)=YT235Y, EU
(B)=
(C)=
(D)=
(E)=
(F)=

No.	Lev.	Parts No.	Description	Q'ty (A)	(B)	(C)	(D)	(E)	(F)	I	R
1	1	1A8070-62240	BOLT,CARRIAGE M12X80	2							
2	1	1A8426-80091	M ASSY, CABIN FRAME	1							
2-1	1	1A8426-80092	M ASSY, CABIN FRAME	1						F	1
2-2	(A=F100220) 1 (A=F100343)	1A8426-80093	M ASSY, CABIN FRAME	1						N	
3	1	1A8420-84442	PLATE	1							
4	1	1A8420-84452	SEAL, PLATE	1							
5	1	26106-060122	BOLT, M6X 12 PLATED	4							

Remarks
(1)No.2-1 & Fig.184 No.68 are interchangeable by set.

N:Old $\xleftrightarrow[\text{No}]{\text{Yes}}$ New, Q:Old $\xleftrightarrow[\text{Yes}]{\text{No}}$ New, R:Old $\xleftrightarrow[\text{Yes}]{\text{Yes}}$ New, S:Old $\xleftrightarrow[\text{No}]{\text{No}}$ New, W:Add, Z:Discontinued, F:Interchangeable by set, K:Q'ty Change

Copyright (C) 2017 YANMAR GLOBAL CS CO., LTD. All RightsReserved.

Fig.184. DOOR

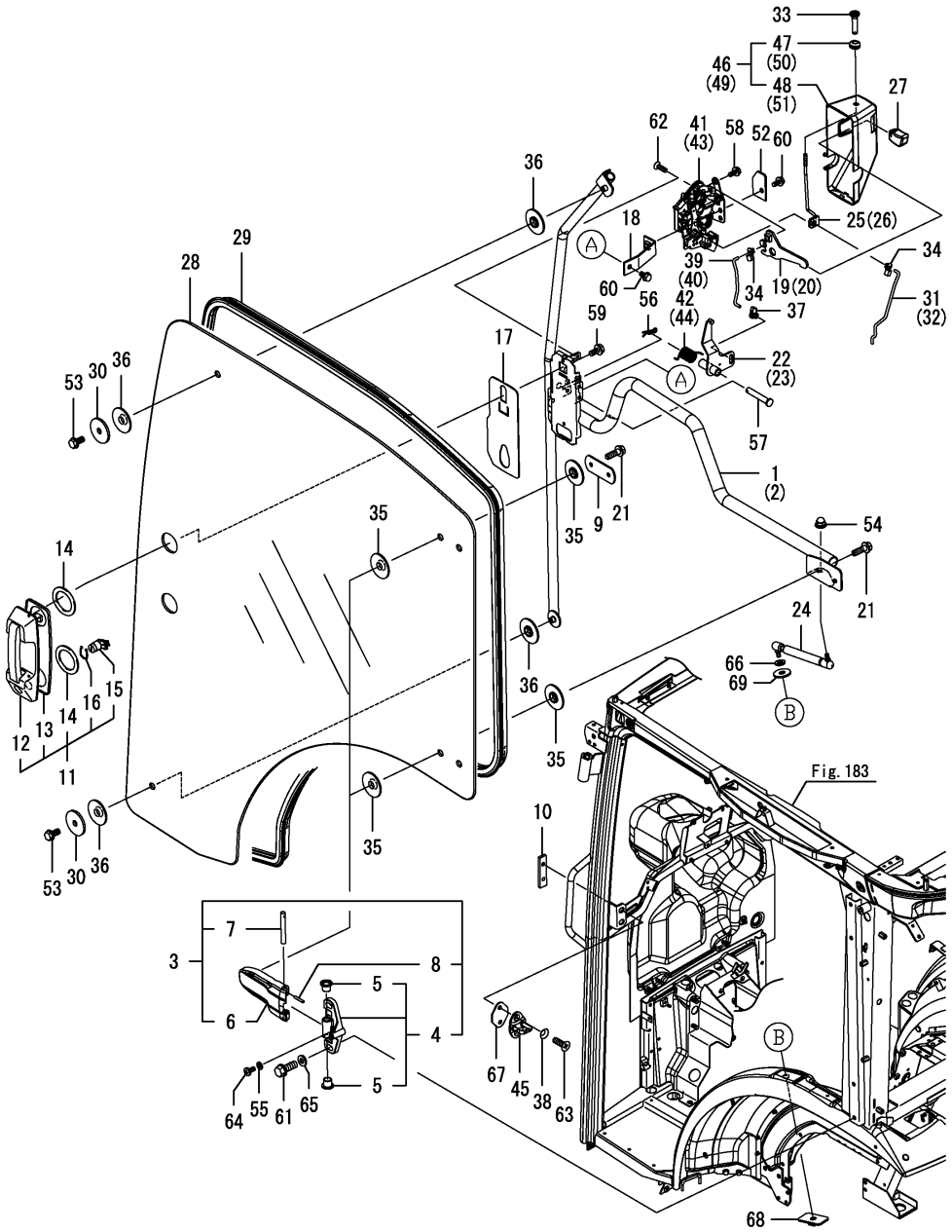

(A)=YT235Y, EU
(B)=
(C)=
(D)=
(E)=
(F)=

No.	Lev.	Parts No.	Description	Q'ty (A)	(B)	(C)	(D)	(E)	(F)	I	R
1	1	1A8425-82112	FRAME ASSY, DOOR L	1							
2	1	1A8425-82123	FRAME ASSY, DOOR R	1							
3	1	198208-82200	HINGE ASSY, DOOR	4							
4	2	198208-82220	HINGE ASSY, DOOR B	4							
5	3	1C1011-33990	BUSH, FLANGE 10	8							
6	2	198208-82250	HINGE, DOOR A	4							
7	2	198208-82260	PIN, DOOR HINGE	4							
8	2	22351-030020	PIN, SPRING 3.0X20	4							
9	1	198492-82150	PLATE, DOOR FRAME	2							
10	1	198463-82350	PLATE, DOOR LOCK	2							
11	1	1A7470-82400	HANDLE ASSY, OUTER	2							
12	2	1A7470-82410	BODY, HANDLE	2							
13	2	1A7470-82420	SEAT, OUTER HANDLE	2							
14	2	1A7470-82580	SEAL, DOOR HANDLE	4							
15	2	1A7470-82880	CYLINDER ASSY, KEY	2							
16	2	1A7470-82890	PIN, KEY CYLINDER	2							
17	1	1A7470-82440	PACKING, LATCH COVER	2							
18	1	1A7470-82450	STAY, DOOR LOCK	2							
19	1	1A7470-82471	LEVER, DOOR L	1							
20	1	1A7470-82481	LEVER, DOOR R	1							
21	1	198093-82510	BOLT, M8X25	8							
22	1	1A7470-82510	LEVER,OPEN OUTSIDE L	1							
23	1	1A7470-82520	LEVER,OPEN OUTSIDE R	1							
24	1	198463-82551	DAMPER, GAS 200	2							
25	1	1A7470-82560	ROD, INSIDE LOCK L	1							
26	1	1A7470-82570	ROD, INSIDE LOCK R	1							
27	1	198492-82590	KNOB, DOOR HANDLE	2							
28	1	1A8425-82611	GLASS, DOOR	2							
29	1	1A7320-82630	WEATHER-STRIP,DG4450	2							
30	1	198255-82640	STAY, HINGE PLATE	4							
31	1	1A7470-82640	ROD, KEY CYLINDER L	1							
32	1	1A7470-82650	ROD, KEY CYLINDER R	1							
33	1	1A7470-82660	KNOB, LOCK	2							
34	1	1A7470-82670	BUSH, LINKAGE A	4							
35	1	1A8110-82670	RUBBER, CUSHION	16							
36	1	1A8110-82670	RUBBER, CUSHION	8							
37	1	1A7470-82680	BUSH, LINKAGE B	2							
38	1	198255-82701	WASHER, TOOTHED 8	4							
39	1	1A7470-82720	ROD, OPEN LEVER L	1							
40	1	1A7470-82730	ROD, OPEN LEVER R	1							
41	1	1A7320-82750	LOCK ASSY, DOOR L	1							
42	1	1A7470-82750	SPRING, DOOR LOCK L	1							
43	1	1A7320-82760	LOCK ASSY, DOOR R	1							
44	1	1A7470-82760	SPRING, DOOR LOCK R	1							
45	1	1A7320-82770	STRIKER, DOOR LOCK	2							
46	1	1A7470-82800	COVER, LATCH L	1							
47	2	198071-58810	GROMMET, 8	1							
48	2	1A7470-82810	COVER, LATCH L	1							
49	1	1A7470-82900	COVER, LATCH R	1							
50	2	198071-58810	GROMMET, 8	1							
51	2	1A7470-82820	COVER, LATCH R	1							

N:Old $\xleftarrow[\text{No}]{\text{Yes}}$ New, Q:Old $\xleftarrow[\text{Yes}]{\text{No}}$ New, R:Old $\xleftarrow[\text{Yes}]{\text{Yes}}$ New, S:Old $\xleftarrow[\text{No}]{\text{No}}$ New, W:Add, Z:Discontinued, F:Interchangeable by set, K:Q'ty Change

++ CONTINUE ++

Copyright (C) 2017 YANMAR GLOBAL CS CO., LTD. All RightsReserved.

Fig.184. DOOR

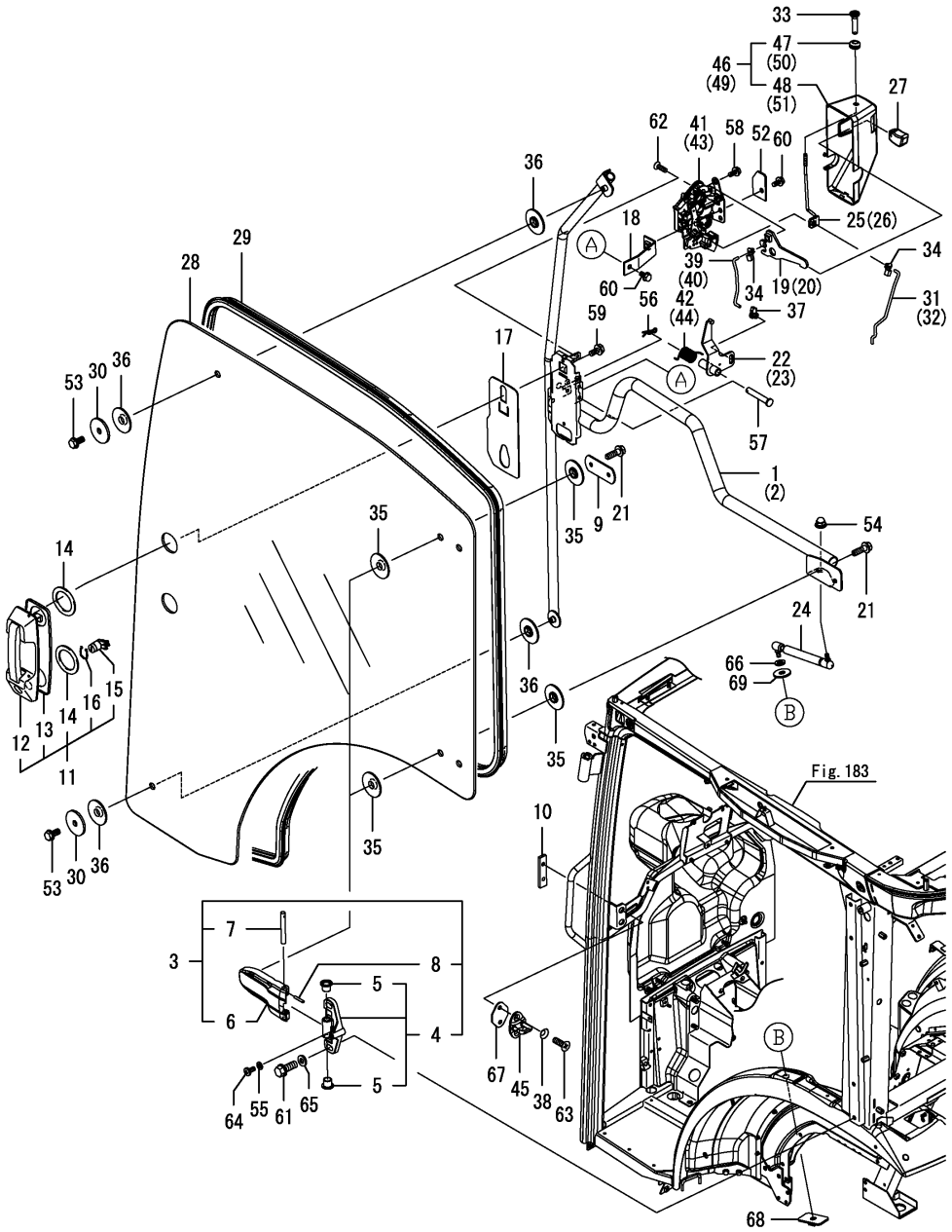

(A)=YT235Y, EU (D)=
(B)= (E)=
(C)= (F)=

No.	Lev.	Parts No.	Description	Q'ty (A)	(B)	(C)	(D)	(E)	(F)	I	R
52	1	1A7470-82950	PLATE, SUPPORT	2							
53	1	198460-83350	BOLT, M8X16	4							
54	1	1A8110-83730	NUT, CAP M8	2							
55	1	22117-060000	WASHER, 6	4							
56	1	22372-080000	PIN, SNAP 8	2							
57	1	22487-080450	PIN 8X 45	2							
58	1	26106-060122	BOLT, M6X 12 PLATED	2							
59	1	26106-060122	BOLT, M6X 12 PLATED	4							
60	1	26106-060122	BOLT, M6X 12 PLATED	4							
61	1	26106-100252	BOLT, M10X 25 PLATED	8							
62	1	26577-060202	SCREW, M6X20	6							
63	1	26577-080252	SCREW, M8X25	4							
64	1	26587-060122	SCREW, M6X12	4							
65	1	22137-100000	WASHER, 10	8							
66	1	198268-82270	WASHER, SPRING 8	2							
67	1	198255-82690	SPACER, STRIKER	2							
68	1	1A8420-82320	STAY ASSY, DAMPER	2						W	
	(A=F100220)										
69	1	198255-83550	WASHER, FLAT 8	2						W	
	(A=F100220)										

N:Old $\overset{\text{Yes}}{\underset{\text{No}}{\leftrightarrow}}$ New, Q:Old $\overset{\text{No}}{\underset{\text{Yes}}{\leftrightarrow}}$ New, R:Old $\overset{\text{Yes}}{\underset{\text{Yes}}{\leftrightarrow}}$ New, S:Old $\overset{\text{No}}{\underset{\text{No}}{\leftrightarrow}}$ New, W:Add, Z:Discontinued, F:Interchangeable by set, K:Q'ty Change

Copyright (C) 2017 YANMAR GLOBAL CS CO., LTD. All RightsReserved.

Fig.185. FRONT WINDOW

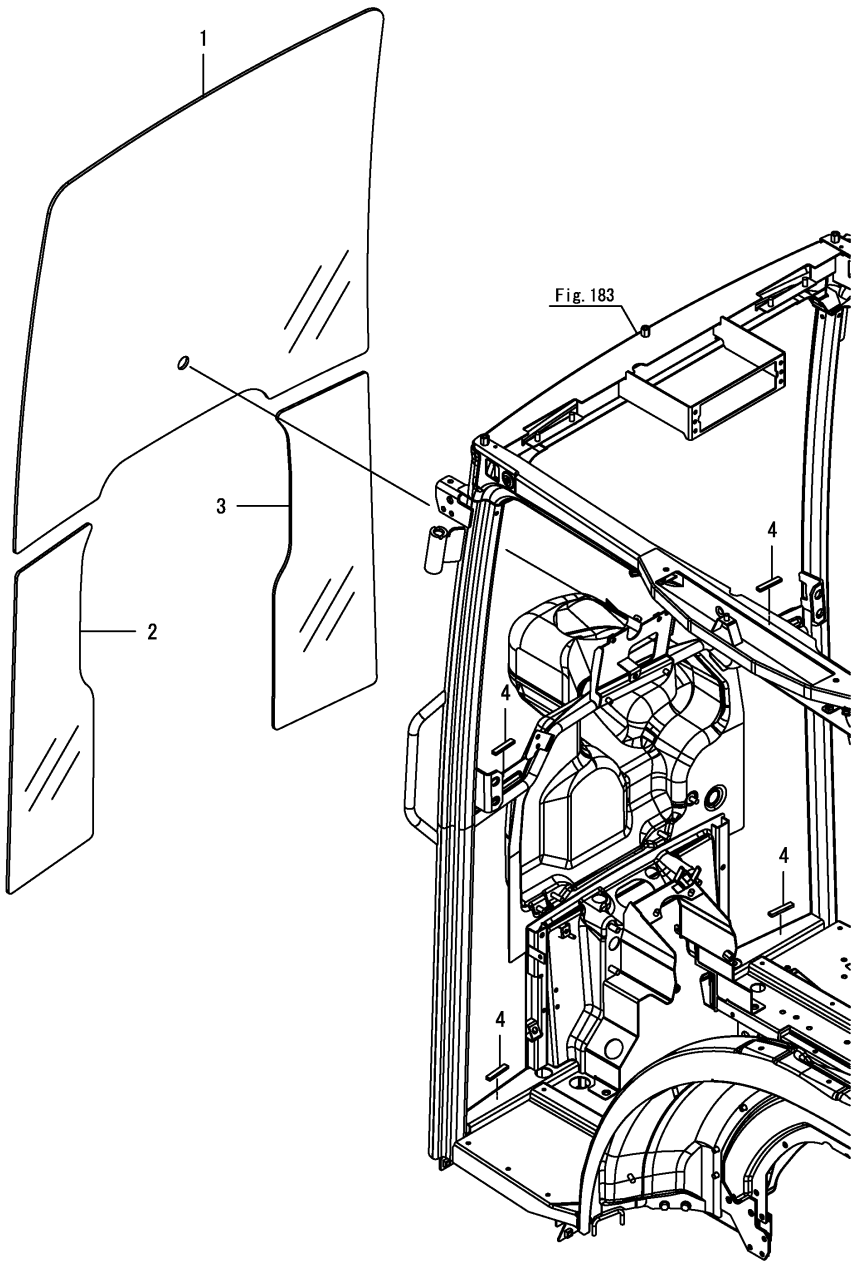

(A)=YT235Y, EU
(B)=
(C)=
(D)=
(E)=
(F)=

No.	Lev.	Parts No.	Description	Q'ty (A)	(B)	(C)	(D)	(E)	(F)	I	R
1	1	1A8425-83110	GLASS, FRONT	1							
2	1	1A8420-83120	GLASS, FRONT LOWER L	1							
3	1	1A8420-83130	GLASS, FRONT LOWER R	1							
4	1	1A7210-83210	SPACER, LOWER	4							

N:Old $\xleftarrow[\text{No}]{\text{Yes}}$ New, Q:Old $\xleftarrow[\text{Yes}]{\text{No}}$ New, R:Old $\xleftarrow[\text{Yes}]{\text{Yes}}$ New, S:Old $\xleftarrow[\text{No}]{\text{No}}$ New, W:Add, Z:Discontinued, F:Interchangeable by set, K:Q'ty Change

Copyright (C) 2017 YANMAR GLOBAL CS CO., LTD. All RightsReserved.

Fig.186. REAR WINDOW

(A)=YT235Y, EU
(B)=
(C)=
(D)=
(E)=
(F)=

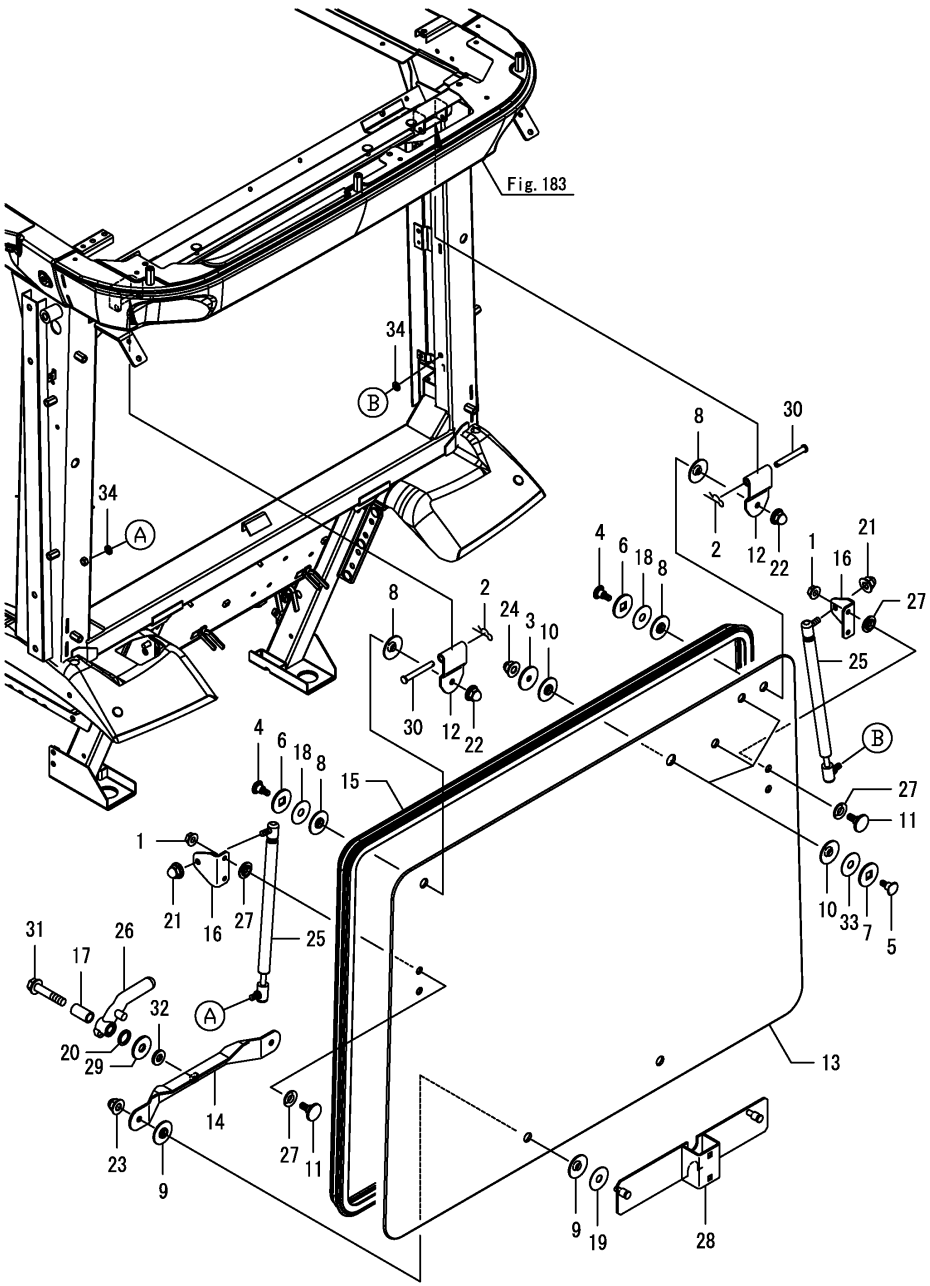

No.	Lev.	Parts No.	Description	Q'ty (A)	(B)	(C)	(D)	(E)	(F)	I	R
1	1	194990-22130	NUT, M6	4							
2	1	22372-080000	PIN, SNAP 8	2							
3	1	198255-82640	STAY, HINGE PLATE	3							
4	1	1A8110-82650	BOLT, CARRIAGE M8	2							
5	1	1A8110-82650	BOLT, CARRIAGE M8	3							
6	1	1A8110-82660	WASHER	2							
7	1	1A8110-82660	WASHER	3							
8	1	1A8110-82670	RUBBER, CUSHION	4							
9	1	1A8110-82670	RUBBER, CUSHION	4							
10	1	1A8110-82670	RUBBER, CUSHION	6							
11	1	1A8484-83300	BOLT, STEPPED M6	4							
12	1	198463-83610	HINGE, REAR	2							
13	1	1A8426-83600	GLASS, REAR DEFOGGER	1							
14	1	198094-83640	BRACKET, REAR LOCK	1							
15	1	198287-83640	WEATHER-STRIP, RG	1							
16	1	198208-83650	STAY, GAS SPRING	2							
17	1	198153-83710	COLLAR, 8.4X12X22.5	1							
18	1	1A8110-83710	SPACER, GLASS	2							
19	1	1A8110-83710	SPACER, GLASS	2							
20	1	198153-83720	WASHER, WAVE 12	1							
21	1	1A8110-83730	NUT, CAP M8	2							
22	1	1A8110-83730	NUT, CAP M8	2							
23	1	1A8110-83730	NUT, CAP M8	2							
24	1	1A8110-83730	NUT, CAP M8	3							
25	1	198093-83752	DAMPER, GAS 100	2							
26	1	198463-83760	HANDLE, SIDE GLASS L	1							
27	1	197820-84740	LINER, GLASS FITTING	8							
28	1	1A7210-93130	BRACKET ASSY, SMV	1							
29	1	198255-83550	WASHER, FLAT 8	1							
30	1	22487-080600	PIN 8X 60	2							
31	1	1A8484-82290	BOLT, FLANGE M8X40	1							
32	1	22137-080000	WASHER, 8	1							
33	1	1A8110-83710	SPACER, GLASS	3							
34	1	198268-82270	WASHER, SPRING 8	2							

N:Old $\overset{\text{Yes}}{\underset{\text{No}}{\leftrightarrow}}$ New, Q:Old $\overset{\text{No}}{\underset{\text{Yes}}{\leftrightarrow}}$ New, R:Old $\overset{\text{Yes}}{\underset{\text{Yes}}{\leftrightarrow}}$ New, S:Old $\overset{\text{No}}{\underset{\text{No}}{\leftrightarrow}}$ New, W:Add, Z:Discontinued, F:Interchangeable by set, K:Q'ty Change

Copyright (C) 2017 YANMAR GLOBAL CS CO., LTD. All RightsReserved.

Fig.187. CABIN SEAL(1)

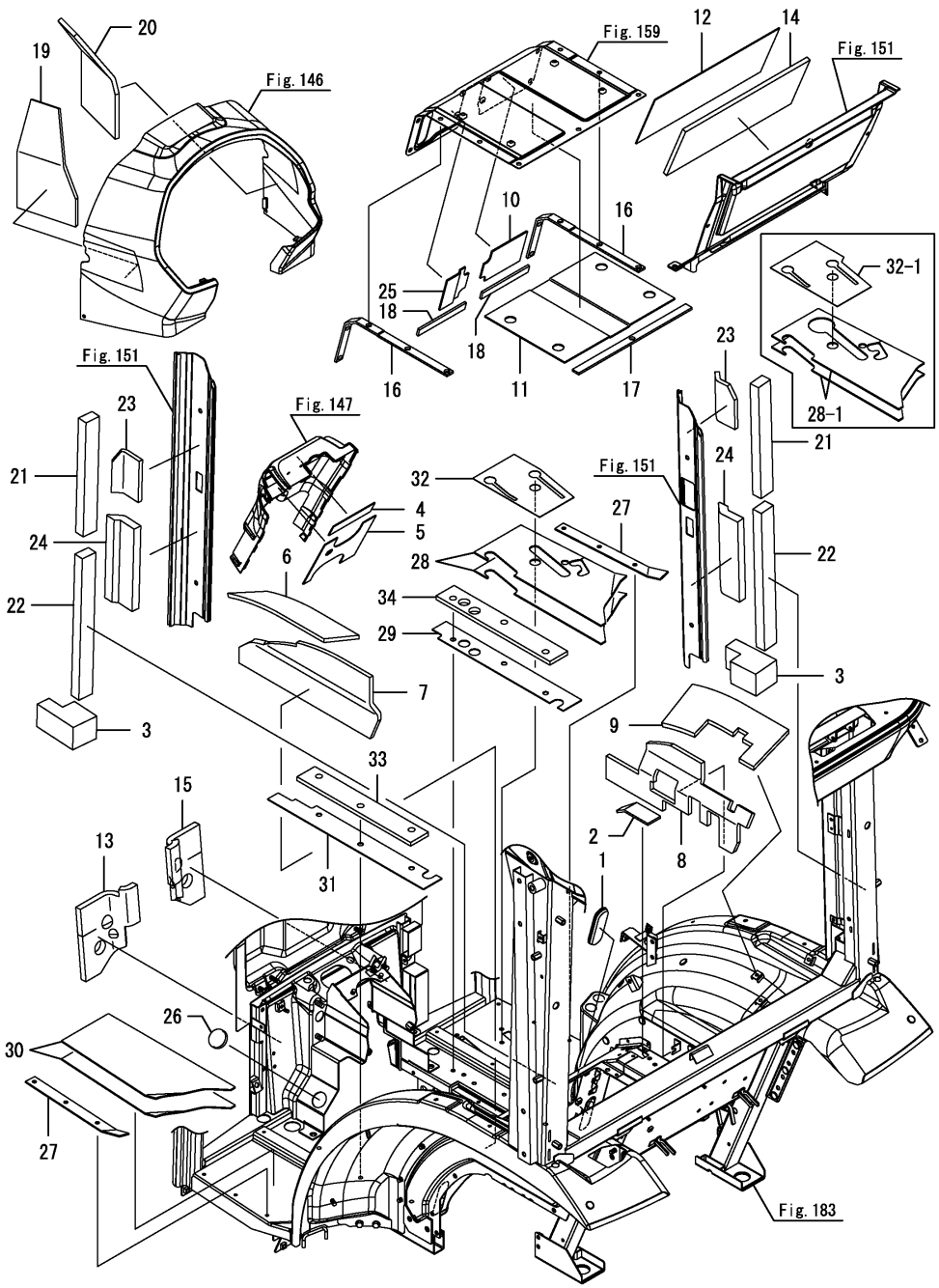

(A)=YT235Y, EU
(B)=
(C)=
(D)=
(E)=
(F)=

No.	Lev.	Parts No.	Description	Q'ty (A)	(B)	(C)	(D)	(E)	(F)	I	R
1	1	1A8420-63120	GROMMET, COVER A	1							
2	1	1A8425-84261	SEAL, MAIN CHANGE	1							
3	1	1A8420-84290	SEAL, HOSE	2							
4	1	1A8420-84350	RUBBER,COVER COL. FA	1							
5	1	1A8420-84360	RUBBER,COVER COL. FB	1							
6	1	1A8420-84460	URETHANE, FENDER A	1							
7	1	1A8420-84471	URETHANE, FENDER B	1							
8	1	1A8420-84483	URETHANE, FENDER C	1							
9	1	1A8420-84491	URETHANE, FENDER D	1							
10	1	1A8420-84510	RUBBER,DUST COVER A	1							
11	1	1A8420-84520	RUBBER, DUST B	1							
12	1	1A8425-84610	RUBBER,SHEET REAR C.	1							
13	1	1A8420-84621	URETHANE, AIRCUT A L	1							
14	1	1A8425-84620	URETHANE,SHEET R. C.	1							
15	1	1A8420-84631	URETHANE, AIRCUT A R	1							
16	1	1A8420-84650	SEAL, DUST A	2							
17	1	1A8420-84660	SEAL, DUST B	1							
18	1	1A8420-84670	SEAL, DUST C	2							
19	1	1A8420-84730	URETHANE, DASHBORD L	1							
20	1	1A8420-84740	URETHANE, DASHBORD R	1							
21	1	1A8420-84790	URETHANE, PILLAR A	2							
22	1	1A8425-84791	URETHANE, PILLAR A	2							
23	1	1A8420-84800	URETHANE, PILLAR B	2							
24	1	1A8425-84800	URETHANE, PILLAR C	2							
25	1	1A8420-84860	RUBBER,DUST COVER C	1							
26	1	198165-62460	GROMMET, 34A	1							
27	1	1A8420-84710	RUBBER, STEP 3	2							
28	1	1A8420-84752	RUBBER, STEP OUTER R	2							
28-1	1	1A8420-84753	RUBBER, STEP OUTER R	2						S	
	(A=F100206)										
29	1	1A8420-84760	RUBBER, STEP 2R	1							
30	1	1A8420-84770	RUBBER, STEP OUTER L	2							
31	1	1A8420-84780	RUBBER, STEP 2L	1							
32	1	1A8425-84821	SEAL, PEDAL	1							
32-1	1	1A8425-84822	SEAL, PEDAL	1						S	
	(A=F100206)										
33	1	1A8420-84920	SEAL, FLOOR SIDE L	1							
34	1	1A8420-84930	SEAL, FLOOR SIDE R	1							

N:Old $\frac{\text{Yes}}{\text{No}}$ New, Q:Old $\frac{\text{No}}{\text{Yes}}$ New, R:Old $\frac{\text{Yes}}{\text{Yes}}$ New, S:Old $\frac{\text{No}}{\text{No}}$ New, W:Add, Z:Discontinued, F:Interchangeable by set, K:Q'ty Change

Copyright (C) 2017 YANMAR GLOBAL CS CO., LTD. All RightsReserved.

Fig.188. CABIN SEAL(2)

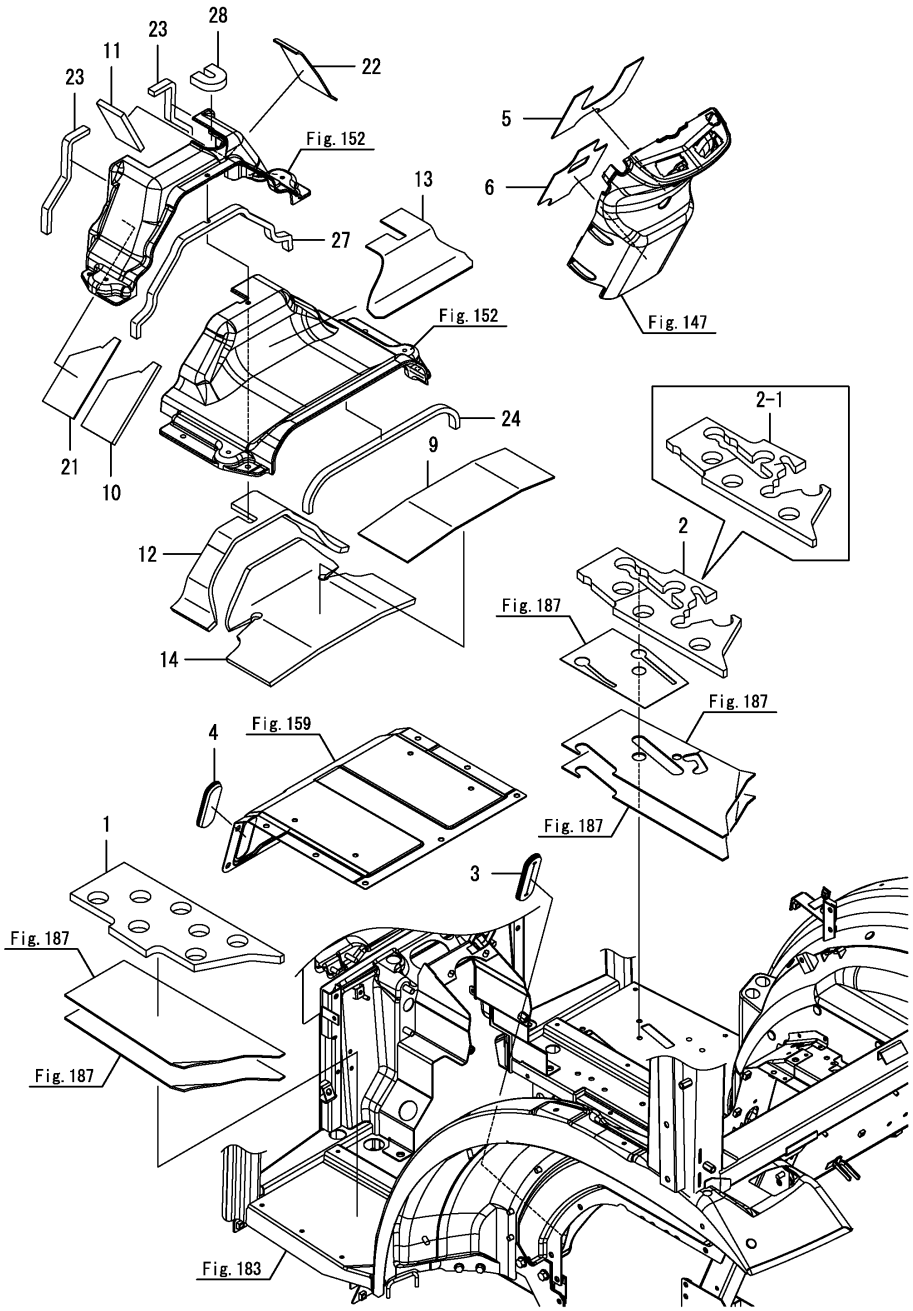

(A)=YT235Y, EU
(B)=
(C)=
(D)=
(E)=
(F)=

No.	Lev.	Parts No.	Description	Q'ty (A)	(B)	(C)	(D)	(E)	(F)	I	R
1	1	1A8420-62180	URETHANE, MAT L	1							
2	1	1A8420-62190	URETHANE, MAT R	1							
2-1	1	1A8420-62191	URETHANE, MAT R	1						S	
	(A=F100201)										
3	1	198208-62810	GROMMET, PEDAL	1							
4	1	1A8420-63120	GROMMET, COVER A	1							
5	1	1A8420-84370	RUBBER,COVER COL. RA	1							
6	1	1A8420-84380	RUBBER,COVER COL. RB	1							
9	1	1A8420-84530	RUBBER, FLOOR B	1							
10	1	1A8420-84541	URETHANE, FLOOR A	1							
11	1	1A8420-84550	URETHANE, FLOOR B	1							
12	1	1A8420-84560	URETHANE, FLOOR C	1							
13	1	1A8420-84590	RUBBER, FLOOR A	1							
14	1	1A8420-84680	URETHANE, FLOOR D	1							
21	1	1A8420-84871	RUBBER, FLOOR CL	1							
22	1	1A8420-84880	RUBBER, FLOOR CR	1							
23	1	1A8420-84901	SEAL, FLOOR FRONT	2							
24	1	1A8420-84910	SEAL, FLOOR REAR	1							
27	1	1A8420-84940	SEAL, FLOOR CENTER	1							
28	1	1A8420-84951	SEAL, HARNESS A	1							

N:Old $\xleftarrow[\text{No}]{\text{Yes}}$ New, Q:Old $\xleftarrow[\text{Yes}]{\text{No}}$ New, R:Old $\xleftarrow[\text{Yes}]{\text{Yes}}$ New, S:Old $\xleftarrow[\text{No}]{\text{No}}$ New, W:Add, Z:Discontinued, F:Interchangeable by set, K:Q'ty Change

Copyright (C) 2017 YANMAR GLOBAL CS CO., LTD. All RightsReserved.

Fig.233. CABIN SEAL(3)

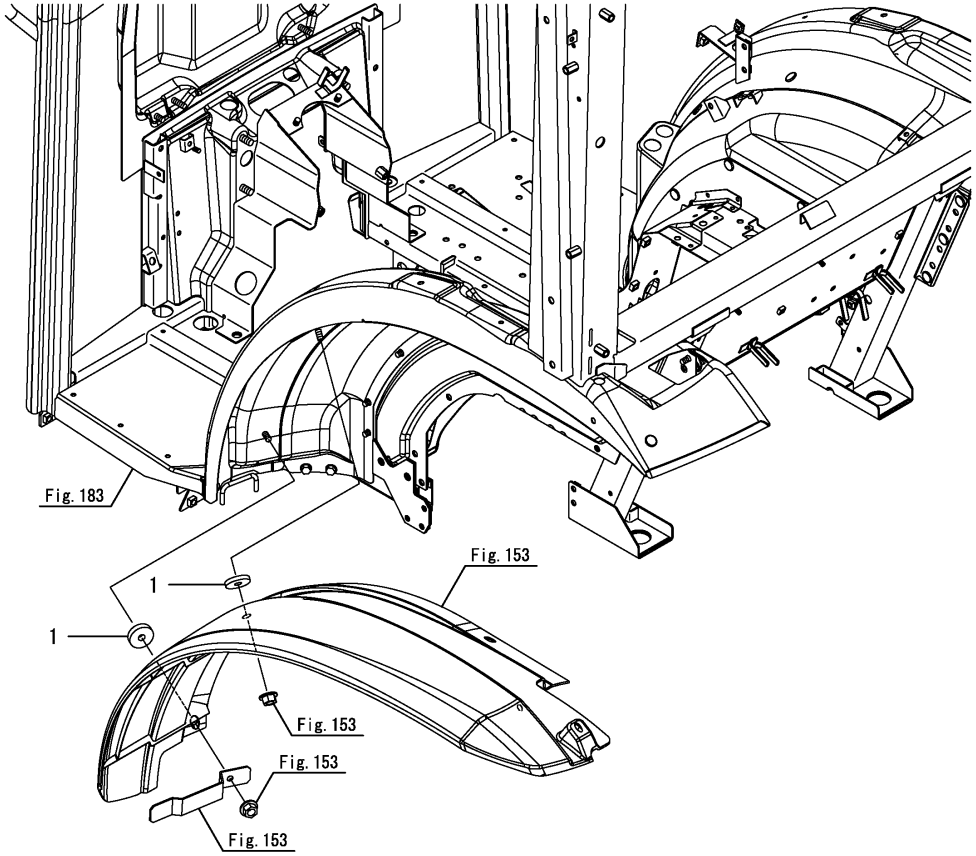

(A)=YT235Y, EU
(B)=
(C)=
(D)=
(E)=
(F)=

No.	Lev.	Parts No.	Description	Q'ty (A)	(B)	(C)	(D)	(E)	(F)	I	R
1	1 (A=F100314)	1A8420-89010	SPONGE, 7X25X4	4						W	

N:Old $\xleftarrow[\text{No}]{\text{Yes}}$ New, Q:Old $\xleftarrow[\text{Yes}]{\text{No}}$ New, R:Old $\xleftarrow[\text{Yes}]{\text{Yes}}$ New, S:Old $\xleftarrow[\text{No}]{\text{No}}$ New, W:Add, Z:Discontinued, F:Interchangeable by set, K:Q'ty Change

Copyright (C) 2017 YANMAR GLOBAL CS CO., LTD. All RightsReserved.

Fig.189. EXTERIOR

(A)=YT235Y, EU
(B)=
(C)=
(D)=
(E)=
(F)=

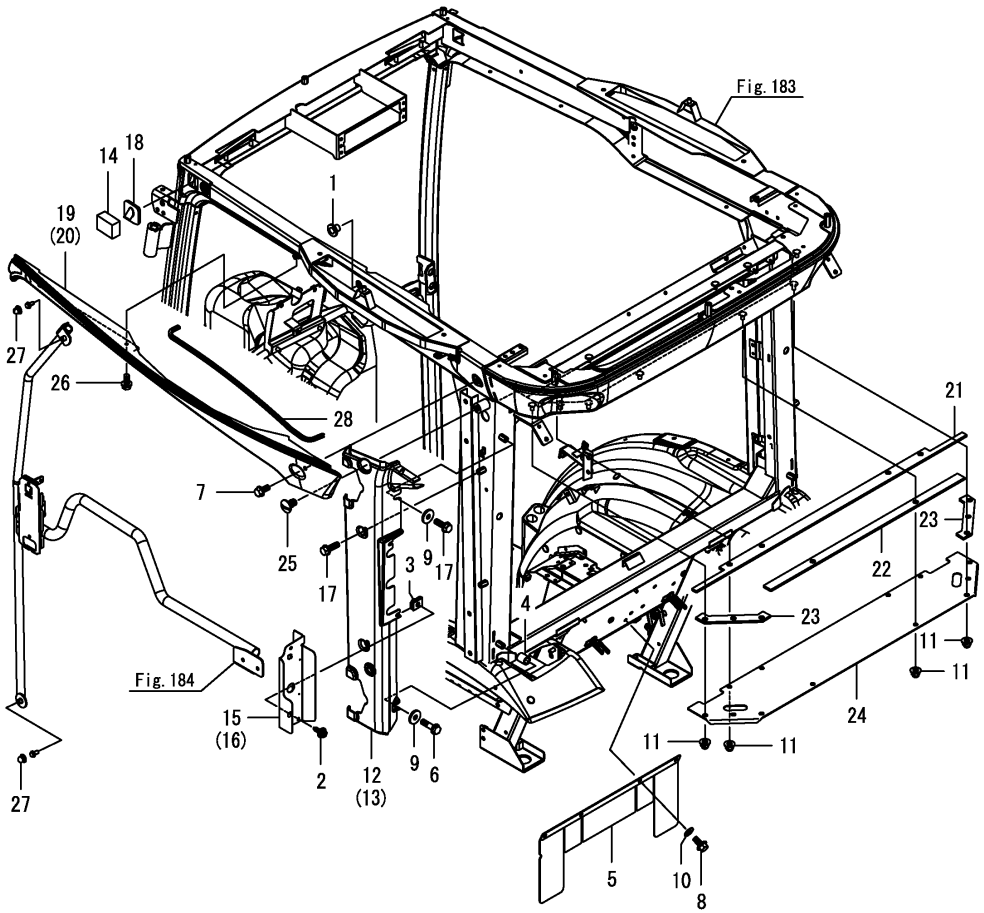

No.	Lev.	Parts No.	Description	Q'ty (A)	(B)	(C)	(D)	(E)	(F)	I	R
1	1	194150-24270	CAP, SCREW 13.0	2							
2	1	198072-60590	BOLT, M6X20	4							
3	1	198071-61890	NUT, SPEED M6	4							
4	1	194151-63250	COLLAR, CUSHION	2							
5	1	1A8400-64300	RUBBER,	1							
6	1	198127-83150	BOLT, M8X30	2							
7	1	198460-83350	BOLT, M8X16	4							
8	1	198460-83350	BOLT, M8X16	4							
9	1	198255-83550	WASHER, FLAT 8	4							
10	1	198255-83550	WASHER, FLAT 8	4							
11	1	1A8110-83730	NUT, CAP M8	12							
12	1	1A8425-85302	COVER,R-PILLAR OUT L	1							
13	1	1A8425-85312	COVER,R-PILLAR OUT R	1							
14	1	1A8420-85331	SEAL, ROOF COVER B	2							
15	1	1A8425-85510	PLATE ASSY, LAMP L	1							
16	1	1A8425-85520	PLATE ASSY, LAMP R	1							
17	1	1A6280-85540	BOLT, M8X20	6							
18	1	1A8420-85560	GROMMET,WATERPROOF A	2							
19	1	1A8420-85601	COVER, ROOF L	1							
20	1	1A8420-85611	COVER, ROOF R	1							
21	1	1A8420-85631	SEAL, AIRCON COVER A	1							
22	1	1A8420-85641	SEAL, AIRCON COVER B	1							
23	1	1A8420-85690	SEAL, AIRCON COVER C	2							
24	1	1A8420-87881	PLATE, AIRCON R	1							
25	1	41810-000120	CAP, BOLT M12	2							
26	1	198072-60590	BOLT, M6X20	2							
27	1	1A8426-82300	CAP, BOLT M8	4							
28	1	1A8426-85700	TRIM,570	2							

N:Old ←Yes/No→ New, Q:Old ←No/Yes→ New, R:Old ←Yes/Yes→ New, S:Old ←No/No→ New, W:Add, Z:Discontinued, F:Interchangeable by set, K:Q'ty Change

Copyright (C) 2017 YANMAR GLOBAL CS CO., LTD. All RightsReserved.

Fig.190. ROOF

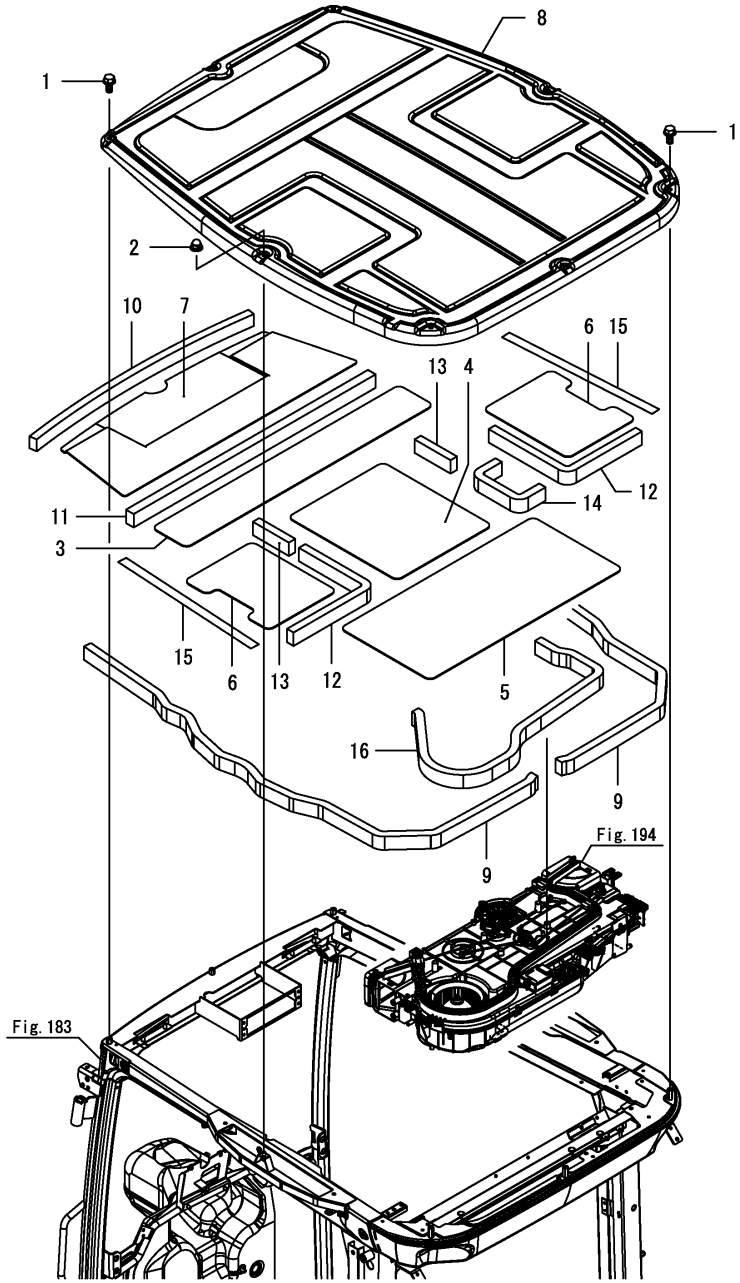

(A)=YT235Y, EU (D)=
(B)= (E)=
(C)= (F)=

No.	Lev.	Parts No.	Description	Q'ty (A)	(B)	(C)	(D)	(E)	(F)	I	R
1	1	198460-83350	BOLT, M8X16	6							
2	1	1A8110-83730	NUT, CAP M8	2							
3	1	1A8420-85500	INSULATOR, ROOF A	1							
4	1	1A8420-85510	INSULATOR, ROOF B	1							
5	1	1A8420-85520	INSULATOR, ROOF C	1							
6	1	1A8420-85530	INSULATOR, ROOF D	2							
7	1	1A8420-85540	INSULATOR, ROOF E	1							
8	1	1A8420-85550	ROOF, OUTER	1							
9	1	1A8420-85581	SEAL, OUTTER ROOF A	2							
10	1	1A8420-85591	SEAL, OUTTER ROOF B	1							
11	1	1A8420-85652	SEAL, AIR-CON A	1							
12	1	1A8420-85672	SEAL, AIR-CON C	2							
13	1	1A8420-85681	SEAL, AIR-CON D	2							
14	1	1A8420-85711	SEAL, AIR CON E	1							
15	1	1A8420-85720	TAPE, AIR CON	2						Z	
	(A=F100387)										
16	1	1A8420-88490	SEAL, AIR CON D	1							

N:Old $\xleftarrow[\text{No}]{\text{Yes}}$ New, Q:Old $\xleftarrow[\text{Yes}]{\text{No}}$ New, R:Old $\xleftarrow[\text{Yes}]{\text{Yes}}$ New, S:Old $\xleftarrow[\text{No}]{\text{No}}$ New, W:Add, Z:Discontinued, F:Interchangeable by set, K:Q'ty Change

Copyright (C) 2017 YANMAR GLOBAL CS CO., LTD. All RightsReserved.

Fig.191. REARVIEW MIRROR

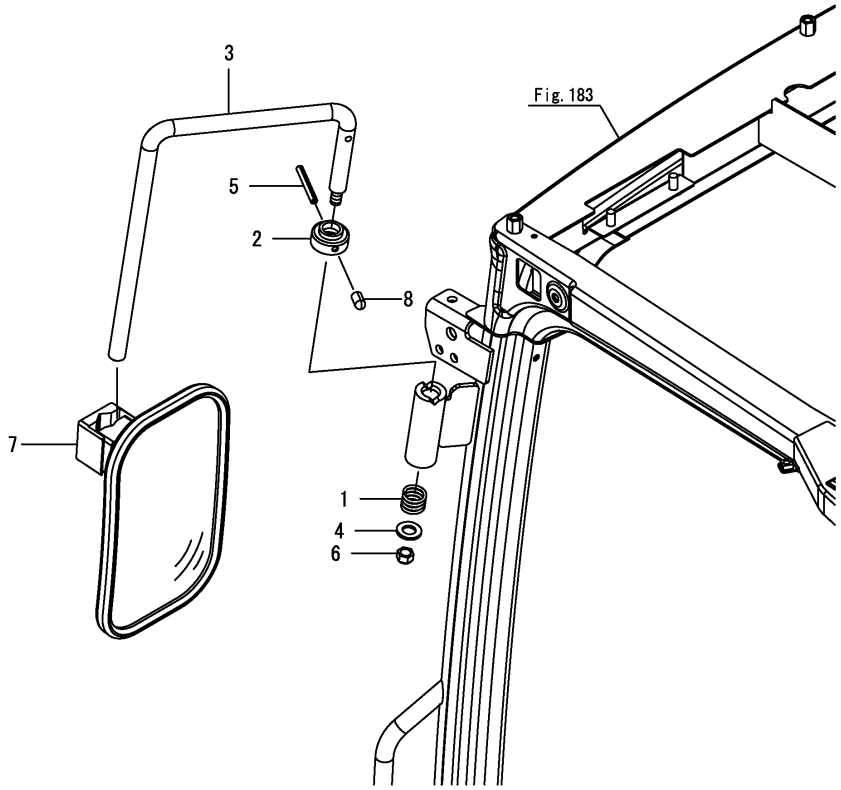

(A)=YT235Y, EU (D)=
(B)= (E)=
(C)= (F)=

No.	Lev.	Parts No.	Description	Q'ty (A)	(B)	(C)	(D)	(E)	(F)	I	R
1	1	198220-63340	SPRING, FRICTION	2							
2	1	198133-64400	GROMMET	2							
3	1	1A8426-85810	SHAFT, MIRROR	2							
4	1	22137-120000	WASHER, 12	2							
5	1	22351-060050	PIN, SPRING 6.0X50	2							
6	1	26346-100002	NUT, M10	2							
7	1	1A7100-64110	MIRROR ASSY,REARVIEW	2							
8	1	1A8426-85730	CAP, M6 THRED	2							

N:Old $\xleftarrow[\text{No}]{\text{Yes}}$ New, Q:Old $\xleftarrow[\text{Yes}]{\text{No}}$ New, R:Old $\xleftarrow[\text{Yes}]{\text{Yes}}$ New, S:Old $\xleftarrow[\text{No}]{\text{No}}$ New, W:Add, Z:Discontinued, F:Interchangeable by set, K:Q'ty Change

Copyright (C) 2017 YANMAR GLOBAL CS CO., LTD. All RightsReserved.

Fig.192. FRONT WIPER

(A)=YT235Y, EU
(B)=
(C)=
(D)=
(E)=
(F)=

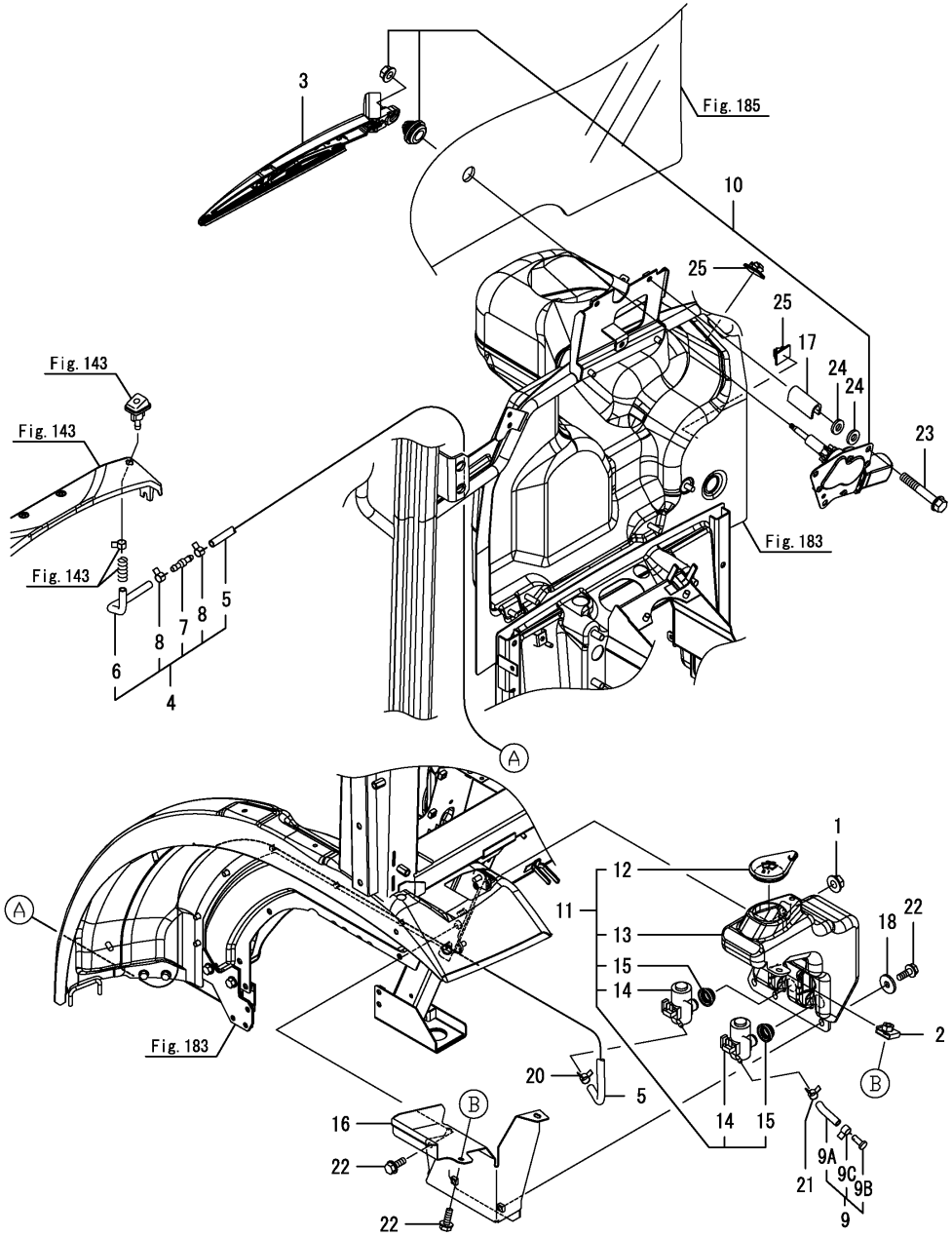

No.	Lev.	Parts No.	Description	Q'ty (A)	(B)	(C)	(D)	(E)	(F)	I	R
1	1	194990-22140	NUT, M8	2							
2	1	198071-61890	NUT, SPEED M6	1							
3	1	1A8420-86400	WIPER ASSY, FRONT	1							
4	1	1A8484-86550	HOSE ASSY, WASHER F	1							
5	2	1A8484-86560	HOSE, WASHER F	1							
6	2	198153-86660	HOSE, VINYL 150	1							
7	2	198153-86670	VALVE, WASHER	1							
8	2	23080-007000	CLAMP, 7	2							
9	1	1A7170-86580	HOSE,VALVE 30	1							
9A	2	1A7170-86590	HOSE,VALVE 30	1							
9B	2	22487-050100	PIN, H 5X 10	1							
9C	2	23080-007000	CLAMP, 7	1							
10	1	1A7210-86610	MOTOR ASSY, WIPER	1							
11	1	1A8420-86642	TANK ASSY, WASHER	1							
12	2	198208-86620	CAP, WASHER TANK	1							
13	2	1A8420-86652	TANK , WASHER	1							
14	2	198127-86710	PUMP, WASHER	2							
15	2	198127-86720	BUSH, WASHER PUMP	2							
16	1	1A8420-86672	COVER ASSY, WS TANK	1							
17	1	198208-86710	SPACER, B	2							
18	1	22157-060000	WASHER, 6	2							
20	1	23080-007000	CLAMP, 7	1							
21	1	23080-007000	CLAMP, 7	1							
22	1	26106-060162	BOLT, M6X 16 PLATED	4							
23	1	26106-080502	BOLT, M8X 50 PLATED	2							
24	1	22137-080000	WASHER, 8	4							
25	1	198268-51660	CLAMP, HARNESS	2							

N:Old ←Yes/No→ New, Q:Old ←No/Yes→ New, R:Old ←Yes/Yes→ New, S:Old ←No/No→ New, W:Add, Z:Discontinued, F:Interchangeable by set, K:Q'ty Change

Copyright (C) 2017 YANMAR GLOBAL CS CO., LTD. All RightsReserved.

Fig.193. AUDIO

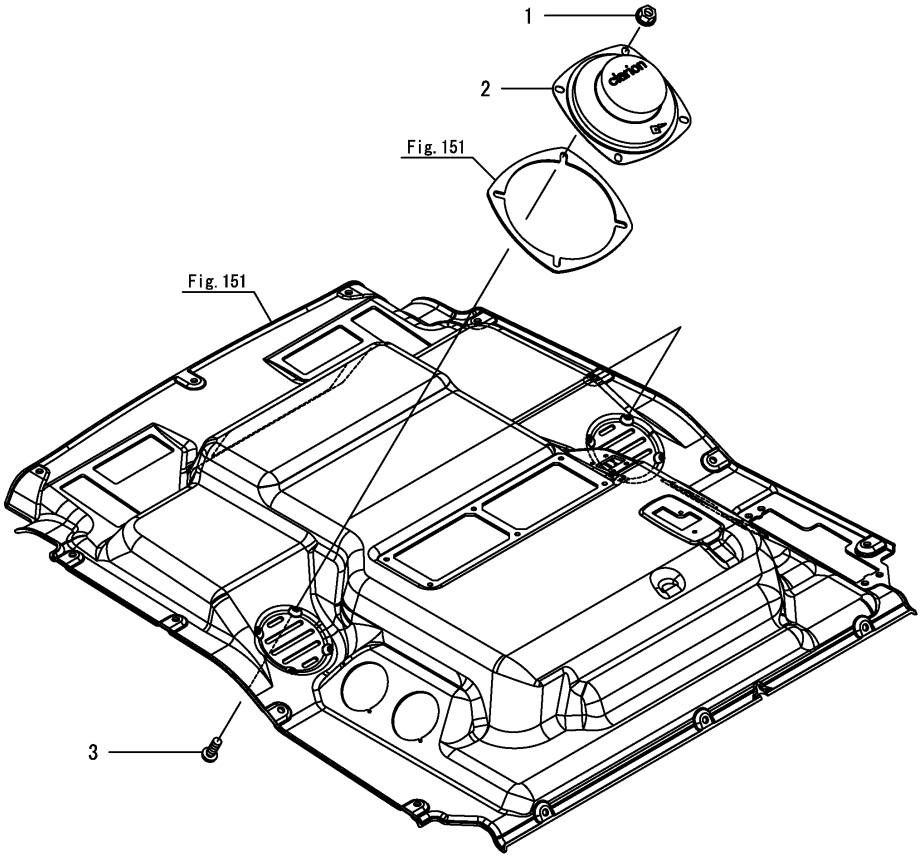

(A)=YT235Y, EU (D)=
(B)= (E)=
(C)= (F)=

No.	Lev.	Parts No.	Description	Q'ty (A)	(B)	(C)	(D)	(E)	(F)	I	R
1	1	194990-22120	NUT, M5	8							
2	1	1A8110-86920	SPEAKER	2							
3	1	26557-050122	SCREW, M5X12	8							

N:Old $\xleftarrow[\text{No}]{\text{Yes}}$ New, Q:Old $\xleftarrow[\text{Yes}]{\text{No}}$ New, R:Old $\xleftarrow[\text{Yes}]{\text{Yes}}$ New, S:Old $\xleftarrow[\text{No}]{\text{No}}$ New, W:Add, Z:Discontinued, F:Interchangeable by set, K:Q'ty Change

Copyright (C) 2017 YANMAR GLOBAL CS CO., LTD. All RightsReserved.

Fig.194. AIR CONDITIONER(1)

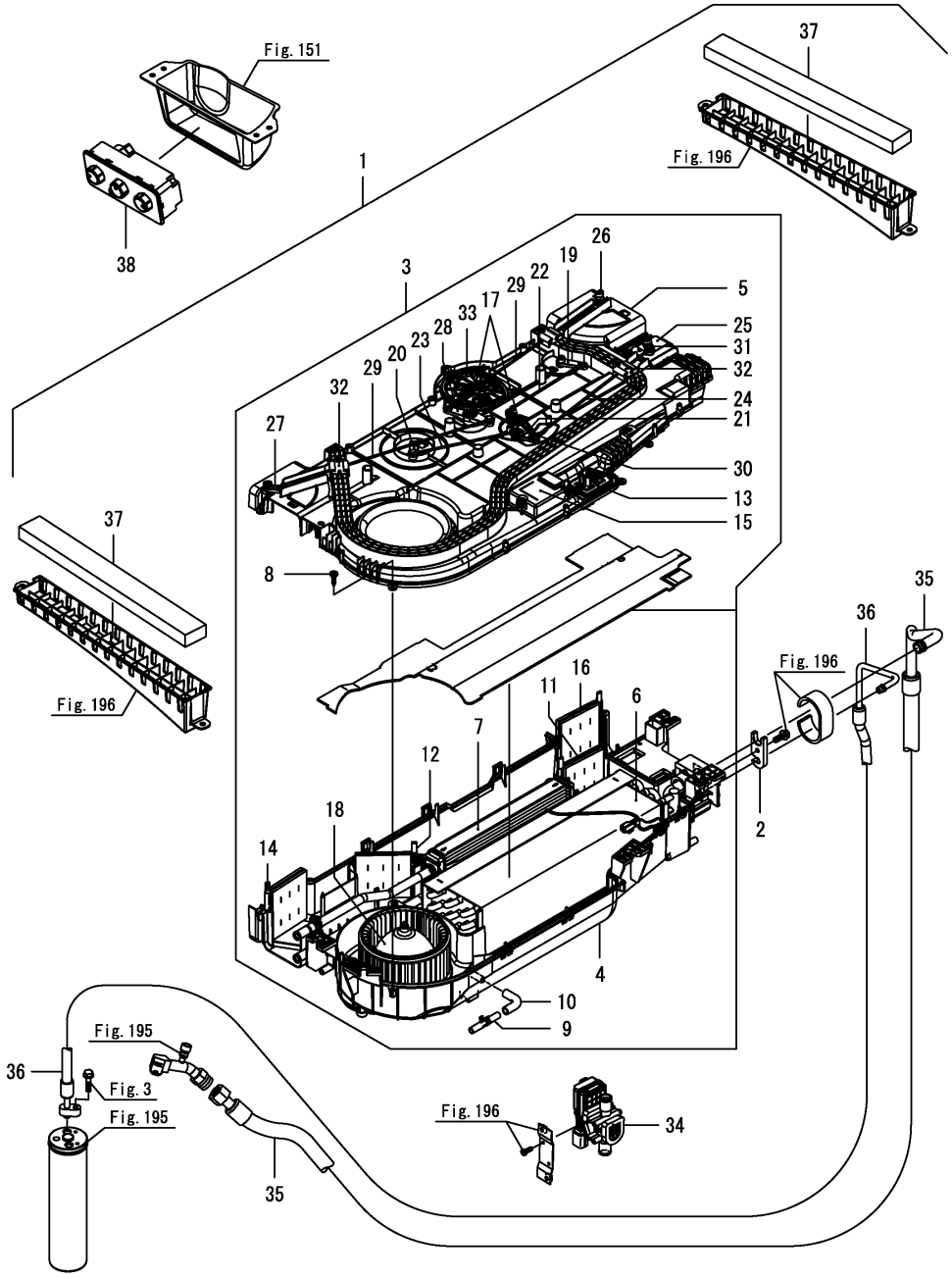

(A)=YT235Y, EU (D)=
(B)= (E)=
(C)= (F)=

No.	Lev.	Parts No.	Description	Q'ty (A)	(B)	(C)	(D)	(E)	(F)	I	R
1	1	1A8425-87012	AIR CON KIT, CAB SYS	1							
2	2	172B03-19110	PLATE, FLANGE	1							
3	2	1A8485-87200	AIR CON UNIT, MANUAL	1							
4	3	1A8485-87210	CASE, LOWER	1							
5	3	1A8485-87220	CASE, UPPER	1							
6	3	1A8485-87230	EVAPORATOR ASSY	1							
7	3	1A8485-87240	CORE ASSY, HEATER	1							
8	3	1A8485-87260	SCREW, TAPPING	35							
9	3	1A8485-87280	JOINT, HOSE	1							
10	3	1A8485-87290	HOSE, DRAIN	1							
11	3	1A8485-87300	DOOR ASSY, A/M R	1							
12	3	1A8485-87310	DOOR ASSY, A/M L	1							
13	3	1A8484-87320	BLOWER, REGISTER	1							
14	3	1A8485-87320	DOOR ASSY, MODE L	1							
15	3	1A8484-87330	AMP, A/C	1							
16	3	1A8485-87330	DOOR ASSY, MODE R	1							
17	3	1A8485-87340	SCREW,TAPPING WASHER	2							
18	3	1A8485-87350	FAN ASSY, BLOWER	1							
19	3	1A8485-87360	LEVER, DOOR A/M R	1							
20	3	1A8485-87370	LEVER, DOOR A/M L	1							
21	3	1A8485-87380	LEVER, LINK A/M	1							
22	3	1A8485-87390	ROD, A/M R	1							
23	3	1A8485-87400	ROD, A/M L	1							
24	3	1A8485-87410	ROD, A/M MAL	1							
25	3	1A8485-87420	ACTUATOR ASSY, A/M	1							
26	3	1A8485-87430	LEVER, DOOR MODE R	1							
27	3	1A8485-87440	LEVER, DOOR MODE L	1							
28	3	1A8485-87450	LEVER, LINK MODE	1							
29	3	1A8485-87460	ROD, MODE	2							
30	3	1A8485-87470	HOLDER, ROD	6							
31	3	1A8485-87480	CLAMP, ROD	4							
32	3	1A8485-87490	COVER ASSY, ROD	3							
33	3	1A8485-87500	ACTUATOR ASSY, MODE	1							
34	2	1A8484-87280	VALVE, WATER	1							
35	2	1A8425-87922	HOSE ASSY,A/U-COMP R	1							
36	2	1A8425-87942	HOSE ASSY, R/D-A/U	1							
37	2	1A8420-87990	FILTER, OUTSIDE AIR	2							
38	1	1A8420-87300	CONTROL,A/C MANU	1							

N:Old $\frac{\text{Yes}}{\text{No}}$ New, Q:Old $\frac{\text{No}}{\text{Yes}}$ New, R:Old $\frac{\text{Yes}}{\text{Yes}}$ New, S:Old $\frac{\text{No}}{\text{No}}$ New, W:Add, Z:Discontinued, F:Interchangeable by set, K:Q'ty Change

Copyright (C) 2017 YANMAR GLOBAL CS CO., LTD. All RightsReserved.

Fig.195. AIR CONDITIONER(2)

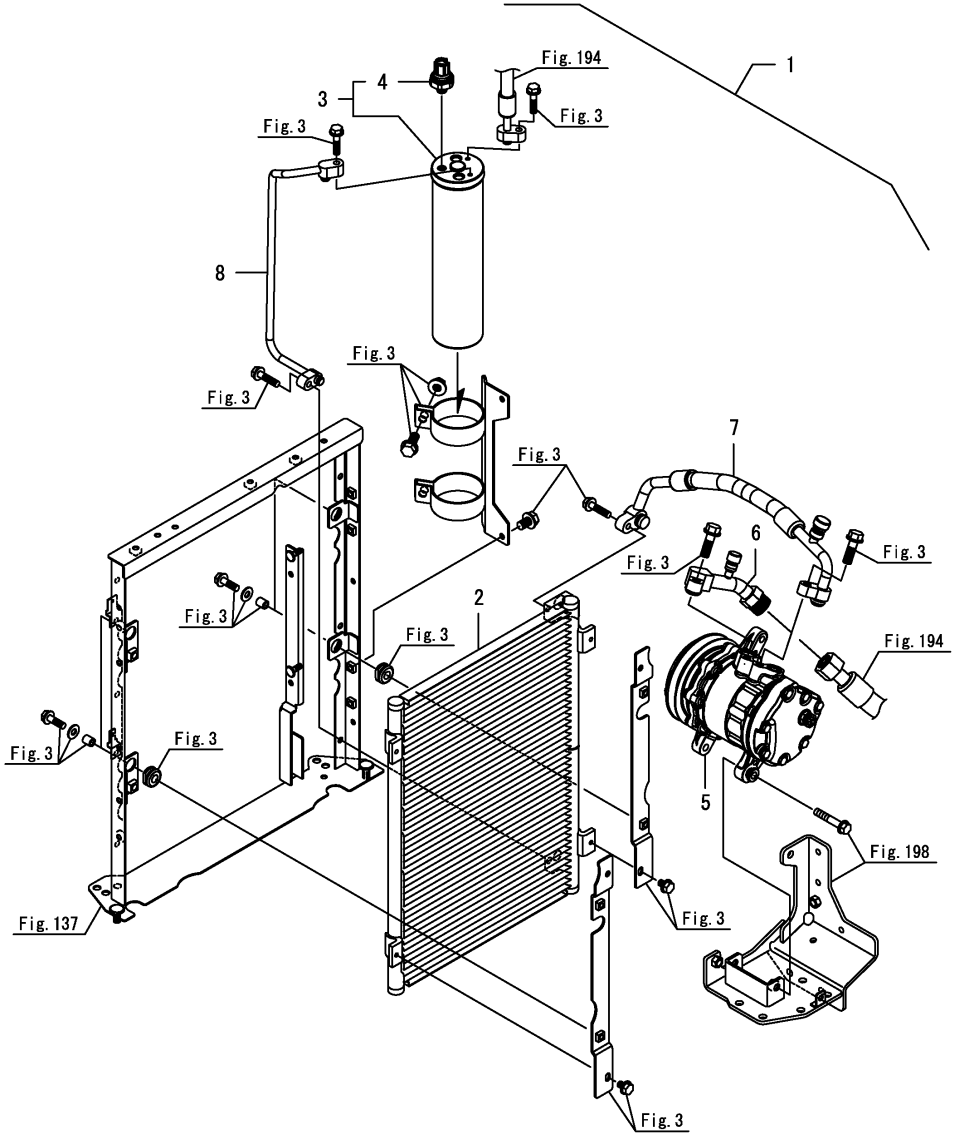

(A)=YT235Y, EU
(B)=
(C)=
(D)=
(E)=
(F)=

No.	Lev.	Parts No.	Description	Q'ty (A)	(B)	(C)	(D)	(E)	(F)	I	R
1	1	1A8425-87060	AIR CON KIT, BODY SY	1							
2	2	1A8484-87110	CONDENSER ASSY	1							
3	2	1A8425-87680	M ASSY, RECEIVER DRY	1							
3-1	2 (A=F100105)	1A8425-87681	M ASSY, RECEIVER DRY	1						R	
4	3	1A8484-87310	SWITCH, PRESSUR	1							
5	2	1A8484-87900	COMPRESSOR ASSY	1							
6	2	1A8400-87910	HOSE ASSY,A/U-COMP F	1							
7	2	1A8420-87930	HOSE ASSY, COMP-COND	1							
8	2	1A8420-87950	PIPE ASSY, COND-R/D	1							

N:Old $\xleftarrow[\text{No}]{\text{Yes}}$ New, Q:Old $\xleftarrow[\text{Yes}]{\text{No}}$ New, R:Old $\xleftarrow[\text{Yes}]{\text{Yes}}$ New, S:Old $\xleftarrow[\text{No}]{\text{No}}$ New, W:Add, Z:Discontinued, F:Interchangeable by set, K:Q'ty Change

Copyright (C) 2017 YANMAR GLOBAL CS CO., LTD. All RightsReserved.

Fig.196. AIR CONDITIONER(3)

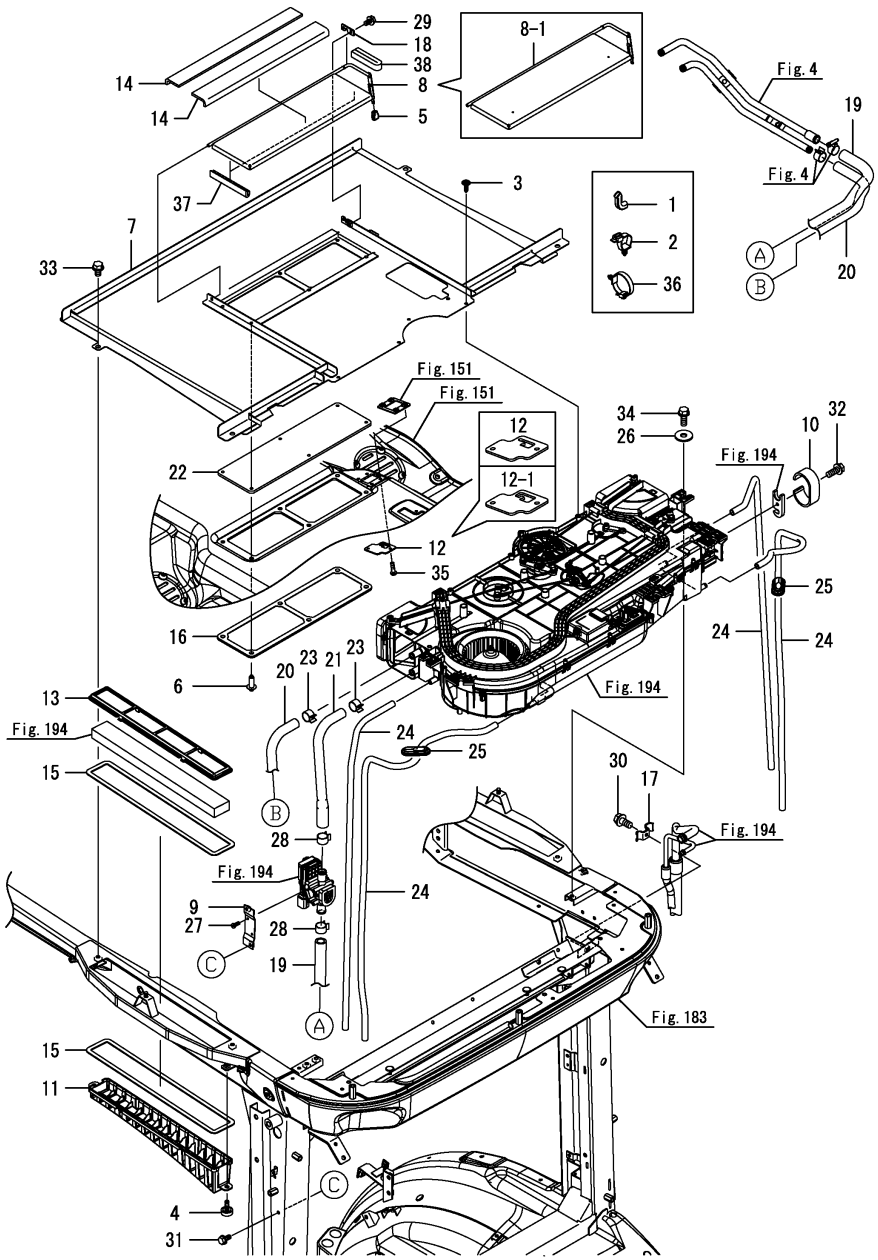

(A)=YT235Y, EU
(B)=
(C)=
(D)=
(E)=
(F)=

No.	Lev.	Parts No.	Description	Q'ty (A)	(B)	(C)	(D)	(E)	(F)	I	R
1	1	195616-24930	TRIM	1							
2	1	1A8275-51670	CLIP, M8 HOLE	5							
3	1	194940-61790	SCREW, TAPPING M5X16	4							
4	1	1A7180-61790	KNOB, 6X15	4							
5	1	1E8545-80080	KNOB, CONTROL	1							
6	1	1A8111-84220	RIVET, PUSH	6							
7	1	1A8420-87601	PLATE ASSY, AIRCON A	1							
8	1	1A8426-87700	SHUTTER ASSY,OUTSIDE	1							
8-1	1	1A8426-87701	SHUTTER ASSY,OUTSIDE	1						F	1
	(A=F100402)										
9	1	1A8420-87720	BRACKET ASSY, VALVE	1							
10	1	1A7030-87730	PAD, AIR-CON HOSE	1							
11	1	1A8420-87813	COVER, FILTER OUT	2							
12	1	1A8426-87830	GUIDE, AIR	1							
12-1	1	1A8426-87831	GUIDE, AIR	1						F	1
	(A=F100402)										
13	1	1A8420-87852	COVER, FILTER OUT UP	2							
14	1	1A8420-87861	URETHANE, OUTSIDE	2							
15	1	1A8420-87871	URETHANE, OUT FILTER	4							
16	1	1A7030-87970	FILTER, INSIDE AIR	1							
17	1	1A7030-88060	CLAMP, AIR-CON HOSE	1							
18	1	1A8420-88601	PLATE, STOPPER	1							
19	1	1A8425-88630	HOSE, HEATER E/G-W/V	1							
20	1	1A8425-88640	HOSE, HEATER A/U-E/G	1							
21	1	1A8420-88650	HOSE, HEATER W/V-A/U	1							
22	1	1A8111-88680	FILTER	1							
23	1	1A7030-88710	CLIP, HEATER HOSE	2							
24	1	1A8425-88970	HOSE, DRAIN RL	4							
25	1	1A8484-88990	GROMMET	2							
26	1	22157-080000	WASHER, 8	5							
27	1	22857-400100	SCREW, 4X10	2							
28	1	23000-022000	CLAMP, 22	2							
29	1	26106-060102	BOLT, M6X 10 PLATED	1							
30	1	26106-060122	BOLT, M6X 12 PLATED	1							
31	1	26106-060122	BOLT, M6X 12 PLATED	2							
32	1	26106-060202	BOLT, M6X 20 PLATED	1							
33	1	26106-080122	BOLT, M8X 12 PLATED	4							
34	1	26106-080202	BOLT, M8X 20 PLATED	5							
35	1	26559-050162	SCREW, M5X16	2							
36	1	194680-51670	BAND, CLIP	2							
37	1	1A8420-87740	URETHANE,OUTSIDE B	2							
38	1	1A8420-87760	URETHANE,OUTSIDE	1							

Remarks
(1)No.8-1, 12-1 are interchangeable by set.

N:Old $\xleftarrow[\text{No}]{\text{Yes}}$ New, Q:Old $\xleftarrow[\text{Yes}]{\text{No}}$ New, R:Old $\xleftarrow[\text{Yes}]{\text{Yes}}$ New, S:Old $\xleftarrow[\text{No}]{\text{No}}$ New, W:Add, Z:Discontinued, F:Interchangeable by set, K:Q'ty Change

Copyright (C) 2017 YANMAR GLOBAL CS CO., LTD. All RightsReserved.

Fig.197. AIR CONDITIONER DUCT

(A)=YT235Y, EU
(B)=
(C)=
(D)=
(E)=
(F)=

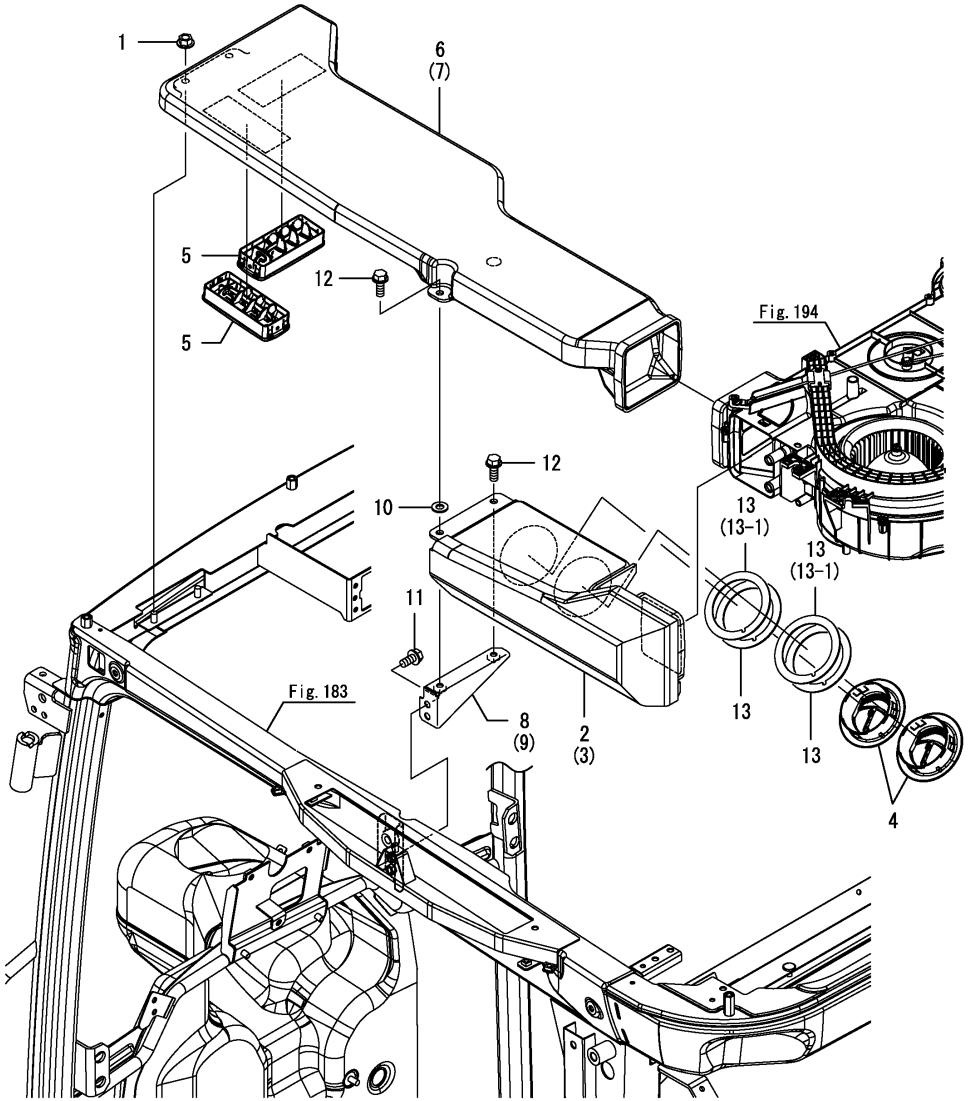

No.	Lev.	Parts No.	Description	Q'ty (A)	(B)	(C)	(D)	(E)	(F)	I	R
1	1	194990-22140	NUT, M8	4							
2	1	1A8420-87360	DUCT ASSY, SIDE L	1							
3	1	1A8420-87370	DUCT ASSY, SIDE R	1							
4	1	1A8060-87400	GRILLE, AIR-CON	4							
5	1	1A8060-87411	GRILLE, AIR-CON	4							
6	1	1A8420-87460	DUCT ASSY,DEF SIDE L	1							
7	1	1A8420-87470	DUCT ASSY,DEF SIDE R	1							
8	1	1A8420-87550	STAY ASSY,DUCT L	1							
9	1	1A8420-87560	STAY ASSY,DUCT R	1							
10	1	22137-080000	WASHER, 8	2							
11	1	26106-080162	BOLT, M8X 16 PLATED	4							
12	1	26106-080202	BOLT, M8X 20 PLATED	4							
13	1	1A8484-87090	SEAL, AIRCON CIRCLE	8							
13-1	1	1A8484-87090	SEAL, AIRCON CIRCLE	4						K	
	(A=F100004)										

N:Old ◄Yes/No► New, Q:Old ◄No/Yes► New, R:Old ◄Yes/Yes► New, S:Old ◄No/No► New, W:Add, Z:Discontinued, F:Interchangeable by set, K:Q'ty Change

Copyright (C) 2017 YANMAR GLOBAL CS CO., LTD. All RightsReserved.

Fig.198. COMPRESSOR

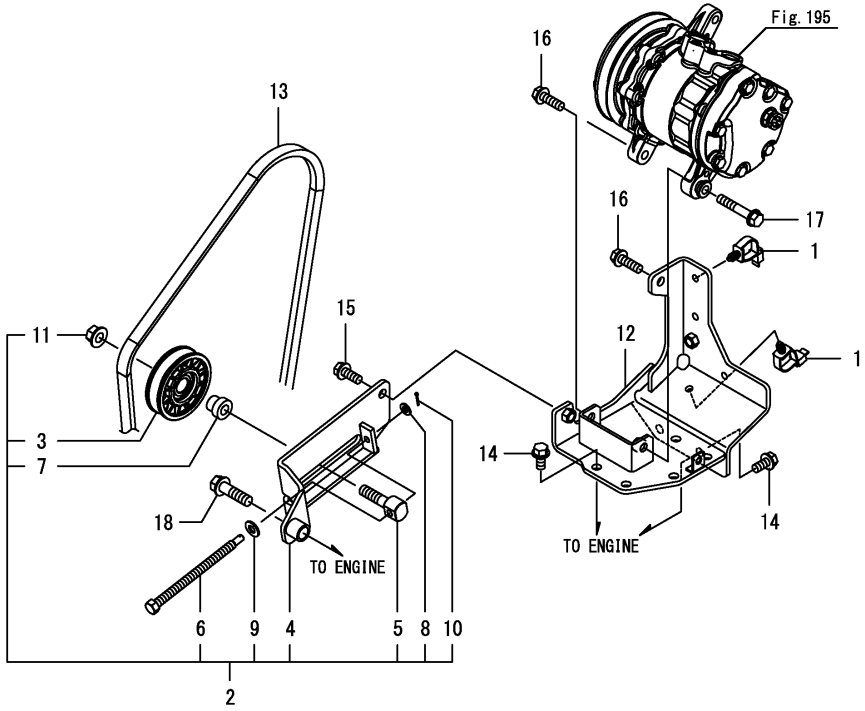

(A)=YT235Y, EU
(B)=
(C)=
(D)=
(E)=
(F)=

No.	Lev.	Parts No.	Description	Q'ty (A)	(B)	(C)	(D)	(E)	(F)	I	R
1	1	1A8275-51670	CLIP, M8 HOLE	2							
2	1	1A8420-87051	PULLEY ASSY, TENSION	1							
3	2	1E6210-51910	PULLEY, TENSION V70A	1							
4	2	1A8420-87061	STAY ASSY, TENSION	1							
5	2	1A8420-87090	BOLT, TENSION PULLEY	1							
6	2	129968-96970	BOLT, ADJUSTER	1							
7	2	129054-96990	SPACER, PULLEY	1							
8	2	22137-060000	WASHER, 6	1							
9	2	22137-080000	WASHER, 8	1							
10	2	22417-160120	PIN, COTTER 1.6X12	1							
11	2	26306-100002	NUT, M10	1							
12	1	1A8420-87900	BRACKET ASSY, COMP	1							
13	1	25132-005600	V-BELT, A56	1							
14	1	26106-080162	BOLT, M8X 16 PLATED	4							
15	1	26106-080202	BOLT, M8X 20 PLATED	1							
16	1	26106-080252	BOLT, M8X 25 PLATED	2							
17	1	26106-080452	BOLT, M8X 45 PLATED	1							
18	1	26106-100352	BOLT, M10X 35 PLATED	1							

N:Old $\xleftarrow[\text{No}]{\text{Yes}}$ New, Q:Old $\xleftarrow[\text{Yes}]{\text{No}}$ New, R:Old $\xleftarrow[\text{Yes}]{\text{Yes}}$ New, S:Old $\xleftarrow[\text{No}]{\text{No}}$ New, W:Add, Z:Discontinued, F:Interchangeable by set, K:Q'ty Change

Copyright (C) 2017 YANMAR GLOBAL CS CO., LTD. All RightsReserved.

Fig.199. DOCUMENT

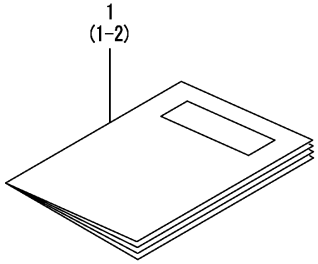

(A)=YT235Y, EU
(B)=
(C)=
(D)=
(E)=
(F)=

No.	Lev.	Parts No.	Description	Q'ty (A)	(B)	(C)	(D)	(E)	(F)	I	R
1	1	0A041-EN0300	OPERATION MANUAL	1							
1-1	1	0A041-EN0301	OPERATION MANUAL	1						N	
	(A=F100275)										
1-2	1	0A041-EN0302	OPERATION MANUAL	1						S	
	(A=*2020.05)										

N:Old $\xleftarrow[\text{No}]{\text{Yes}}$ New, Q:Old $\xleftarrow[\text{Yes}]{\text{No}}$ New, R:Old $\xleftarrow[\text{Yes}]{\text{Yes}}$ New, S:Old $\xleftarrow[\text{No}]{\text{No}}$ New, W:Add, Z:Discontinued, F:Interchangeable by set, K:Q'ty Change

Copyright (C) 2017 YANMAR GLOBAL CS CO., LTD. All RightsReserved.

Fig.200. FRONT WEIGHT

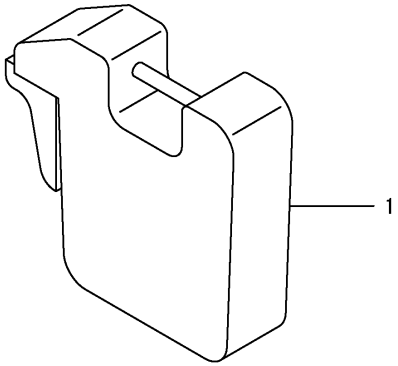

(A)=YT235Y, EU
(B)=
(C)=
(D)=
(E)=
(F)=

No.	Lev.	Parts No.	Description	Q'ty (A)	(B)	(C)	(D)	(E)	(F)	I	R
1	1	1TS100-01001	FRONT WEIGHT 20	1							

N:Old ←Yes/No→ New, Q:Old ←No/Yes→ New, R:Old ←Yes/Yes→ New, S:Old ←No/No→ New, W:Add, Z:Discontinued, F:Interchangeable by set, K:Q'ty Change

Copyright (C) 2017 YANMAR GLOBAL CS CO., LTD. All RightsReserved.

Fig.201. BRACKET(FRONT WEIGHT)

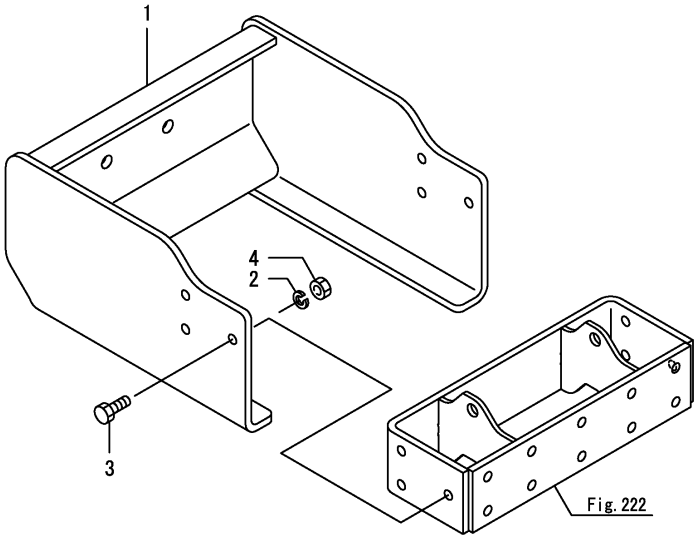

(A)=YT235Y, EU (D)=
(B)= (E)=
(C)= (F)=

No.	Lev.	Parts No.	Description	Q'ty (A)	(B)	(C)	(D)	(E)	(F)	I	R
1	1	1A8476-11150	BUMPER, EXTENSION	1							
2	1	194274-13580	WASHER, SPRING 12	6							
3	1	194465-13650	BOLT, M12X32	6							
4	1	26716-120002	NUT, M12	6							

N:Old $\xleftrightarrow[\text{No}]{\text{Yes}}$ New, Q:Old $\xleftrightarrow[\text{Yes}]{\text{No}}$ New, R:Old $\xleftrightarrow[\text{Yes}]{\text{Yes}}$ New, S:Old $\xleftrightarrow[\text{No}]{\text{No}}$ New, W:Add, Z:Discontinued, F:Interchangeable by set, K:Q'ty Change

Copyright (C) 2017 YANMAR GLOBAL CS CO., LTD. All RightsReserved.

Fig.202. FRONT HITCH

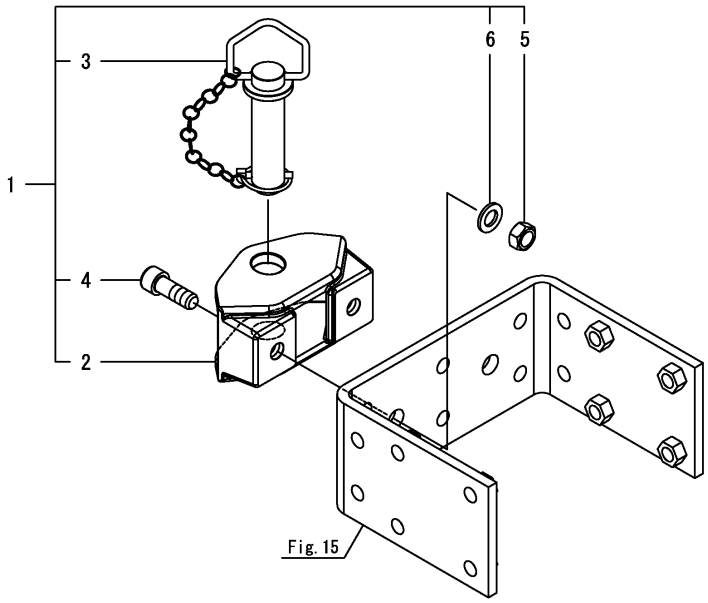

(A)=YT235Y, EU
(B)=
(C)=
(D)=
(E)=
(F)=

No.	Lev.	Parts No.	Description	Q'ty (A)	(B)	(C)	(D)	(E)	(F)	I	R
1	1	1A8476-11800	HITCH KIT, FRONT	1							
2	2	1A8476-11810	HITCH, FRONT	1							
3	2	1A8476-11830	PIN, HITCH	1							
4	2	1A8476-11840	BOLT, HITCH	2							
5	2	1A8476-11850	NUT, M16	2							
6	2	1A8476-11860	WASHER, M16	2							

N:Old $\xleftarrow[\text{No}]{\text{Yes}}$ New, Q:Old $\xleftarrow[\text{Yes}]{\text{No}}$ New, R:Old $\xleftarrow[\text{Yes}]{\text{Yes}}$ New, S:Old $\xleftarrow[\text{No}]{\text{No}}$ New, W:Add, Z:Discontinued, F:Interchangeable by set, K:Q'ty Change

Copyright (C) 2017 YANMAR GLOBAL CS CO., LTD. All RightsReserved.

Fig.203. P.T.O. SHAFT GUARD

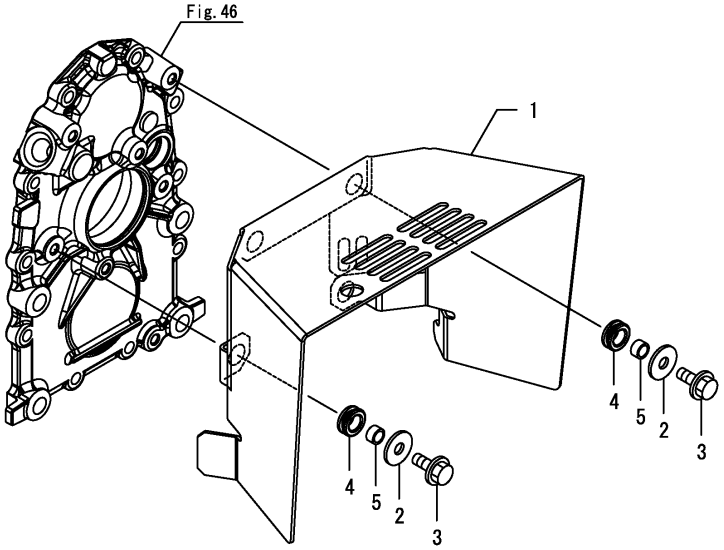

(A)=YT235Y, EU (D)=
(B)= (E)=
(C)= (F)=

No.	Lev.	Parts No.	Description	Q'ty (A)	(B)	(C)	(D)	(E)	(F)	I	R
1	1	1A8415-26930	M ASSY, PTO GUARD	1							
2	1	22157-080000	WASHER, 8	4							
3	1	26106-080202	BOLT, M8X 20 PLATED	4							
4	1	29311-124000	GROMET, 12.0X4	4							
5	1	1C6215-81681	COLLAR, 8.8X12X6.5	4							

N:Old $\xleftrightarrow[\text{No}]{\text{Yes}}$ New, Q:Old $\xleftrightarrow[\text{Yes}]{\text{No}}$ New, R:Old $\xleftrightarrow[\text{Yes}]{\text{Yes}}$ New, S:Old $\xleftrightarrow[\text{No}]{\text{No}}$ New, W:Add, Z:Discontinued, F:Interchangeable by set, K:Q'ty Change

Copyright (C) 2017 YANMAR GLOBAL CS CO., LTD. All RightsReserved.

Fig.204. WORK LAMP(FRONT)(CABIN)

(A)=YT235Y, EU
(B)=
(C)=
(D)=
(E)=
(F)=

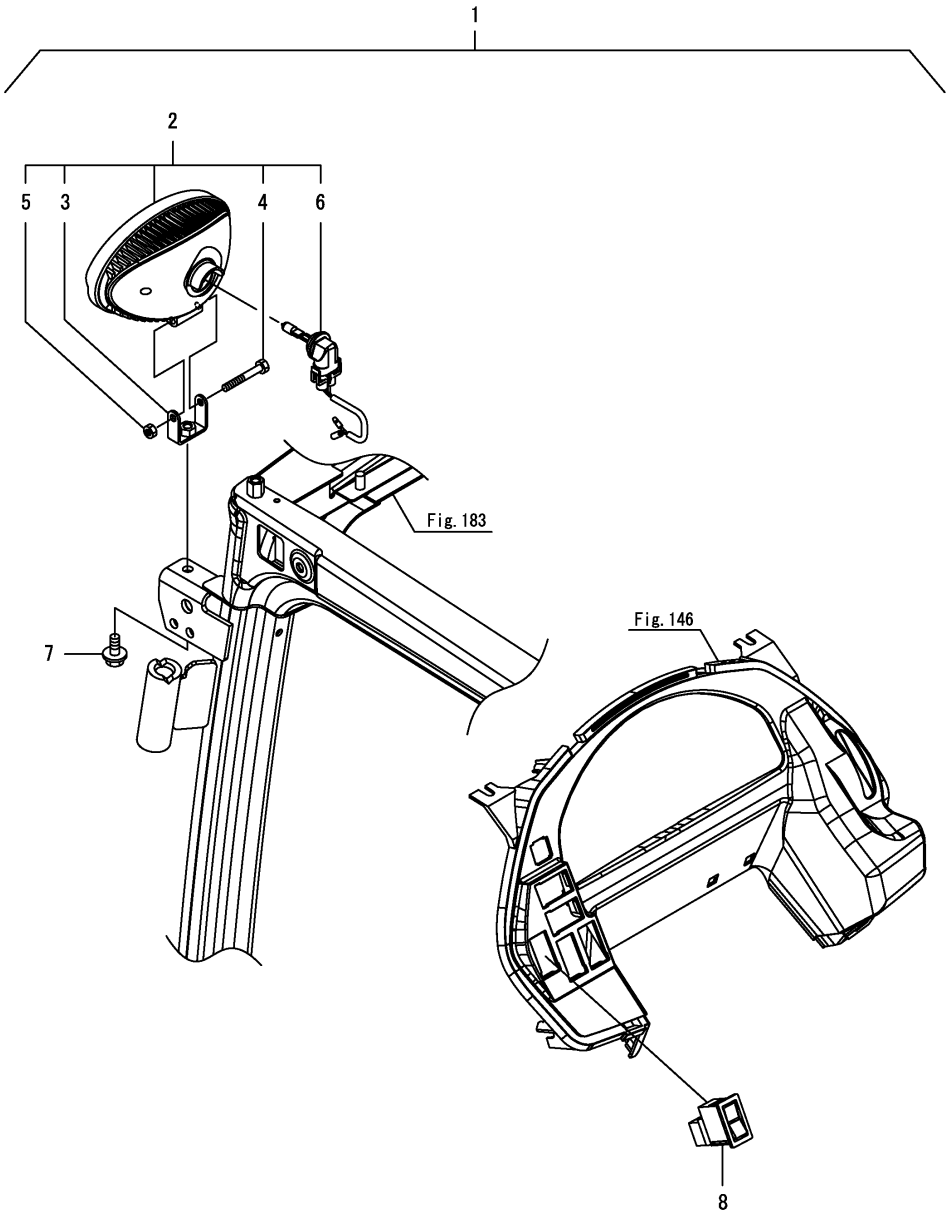

No.	Lev.	Parts No.	Description	Q'ty (A)	(B)	(C)	(D)	(E)	(F)	I	R
1	1	1A8426-53410	LAMP KIT,WORK HALOGE	1							
2	2	1A8484-54200	LAMP ASSY,WORK 37.5W	2							
3	3	1A8484-54220	BRACKET, WORK LAMP	2							
4	3	1A8060-54230	BOLT, M6X45	2							
5	3	1A8060-54240	NUT, M6	2							
6	3	1A8484-54250	BULB, 12V37.5W	2							
7	2	198460-83350	BOLT, M8X16	2							
8	2	1A7805-52550	SWITCH, WORK LAMP	1							

N:Old $\xleftarrow[\text{No}]{\text{Yes}}$ New, Q:Old $\xleftarrow[\text{Yes}]{\text{No}}$ New, R:Old $\xleftarrow[\text{Yes}]{\text{Yes}}$ New, S:Old $\xleftarrow[\text{No}]{\text{No}}$ New, W:Add, Z:Discontinued, F:Interchangeable by set, K:Q'ty Change

Copyright (C) 2017 YANMAR GLOBAL CS CO., LTD. All RightsReserved.

Fig.205. WORK LAMP(REAR)(CABIN)

(A)=YT235Y, EU
(B)=
(C)=
(D)=
(E)=
(F)=

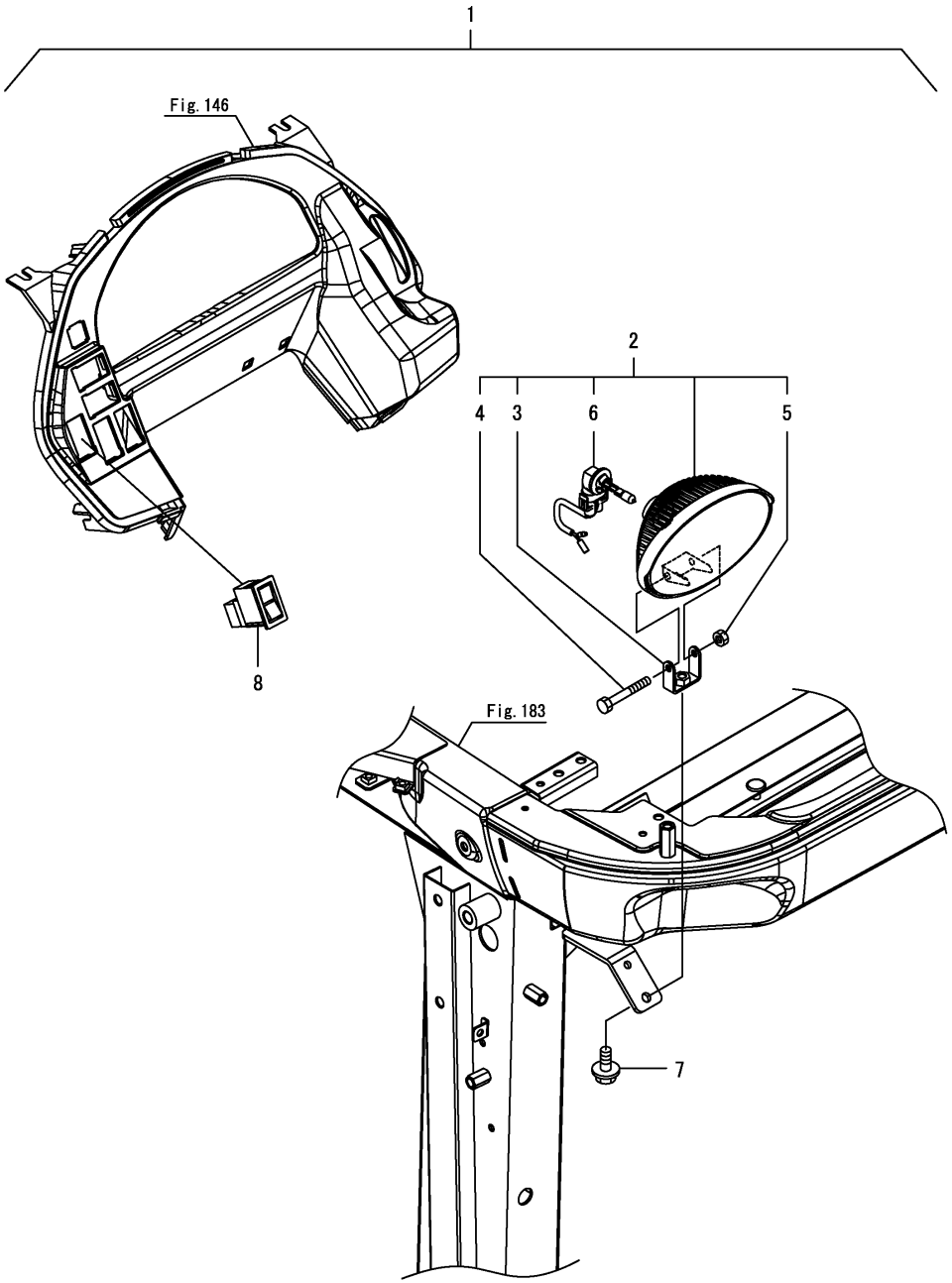

No.	Lev.	Parts No.	Description	Q'ty (A)	(B)	(C)	(D)	(E)	(F)	I	R
1	1	1A8426-53410	LAMP KIT,WORK HALOGE	1							
2	2	1A8484-54200	LAMP ASSY,WORK 37.5W	2							
3	3	1A8484-54220	BRACKET, WORK LAMP	2							
4	3	1A8060-54230	BOLT, M6X45	2							
5	3	1A8060-54240	NUT, M6	2							
6	3	1A8484-54250	BULB, 12V37.5W	2							
7	2	198460-83350	BOLT, M8X16	2							
8	2	1A7805-52550	SWITCH, WORK LAMP	1							

N:Old $\overset{\text{Yes}}{\underset{\text{No}}{\leftrightarrows}}$ New, Q:Old $\overset{\text{No}}{\underset{\text{Yes}}{\leftrightarrows}}$ New, R:Old $\overset{\text{Yes}}{\underset{\text{Yes}}{\leftrightarrows}}$ New, S:Old $\overset{\text{No}}{\underset{\text{No}}{\leftrightarrows}}$ New, W:Add, Z:Discontinued, F:Interchangeable by set, K:Q'ty Change

Copyright (C) 2017 YANMAR GLOBAL CS CO., LTD. All RightsReserved.

Fig.206. WORK LAMP(FRONT)(LED)(CABIN)

(A)=YT235Y, EU
(B)=
(C)=
(D)=
(E)=
(F)=

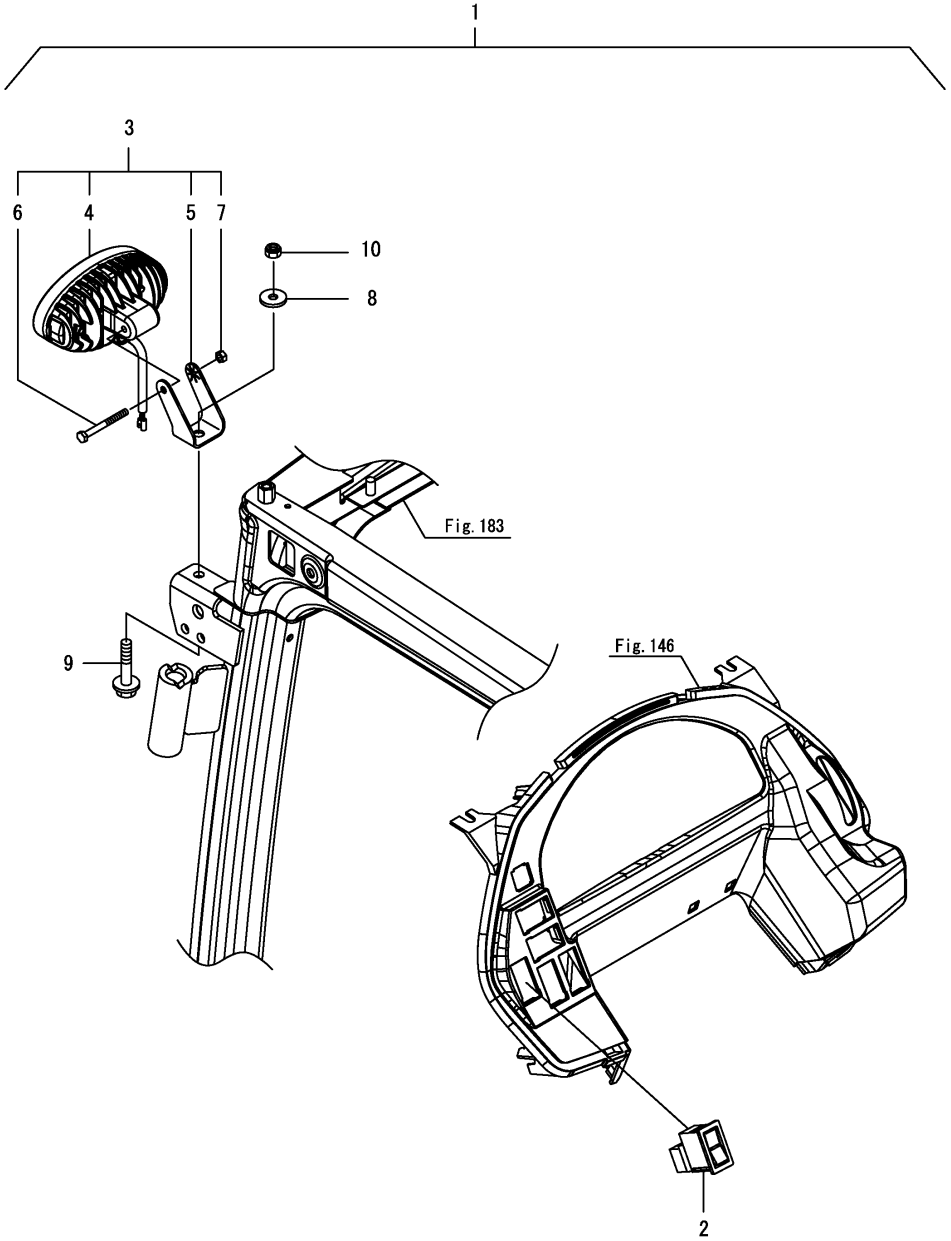

No.	Lev.	Parts No.	Description	Q'ty (A)	(B)	(C)	(D)	(E)	(F)	I	R
1	1	1A8426-53430	LAMP KIT, WORK LED	1							
2	2	1A7805-52550	SWITCH, WORK LAMP	1							
3	2	1A8060-54103	LAMP ASSY, WORK	2							
4	3	1A8060-54112	LAMP, WORK LED	1							
5	3	1A8060-54120	BRACKET, LED LAMP	1							
6	3	1A8060-54130	BOLT, M6X70	1							
7	3	1A8060-54140	NUT, M6	1							
8	2	198255-83550	WASHER, FLAT 8	2							
9	2	1A6280-85540	BOLT, M8X20	2							
10	2	26346-080002	NUT, M8	2							

N:Old $\xleftrightarrow[\text{No}]{\text{Yes}}$ New, Q:Old $\xleftrightarrow[\text{Yes}]{\text{No}}$ New, R:Old $\xleftrightarrow[\text{Yes}]{\text{Yes}}$ New, S:Old $\xleftrightarrow[\text{No}]{\text{No}}$ New, W:Add, Z:Discontinued, F:Interchangeable by set, K:Q'ty Change

Copyright (C) 2017 YANMAR GLOBAL CS CO., LTD. All RightsReserved.

Fig.207. WORK LAMP(REAR)(LED)(CABIN)

(A)=YT235Y, EU
(B)=
(C)=
(D)=
(E)=
(F)=

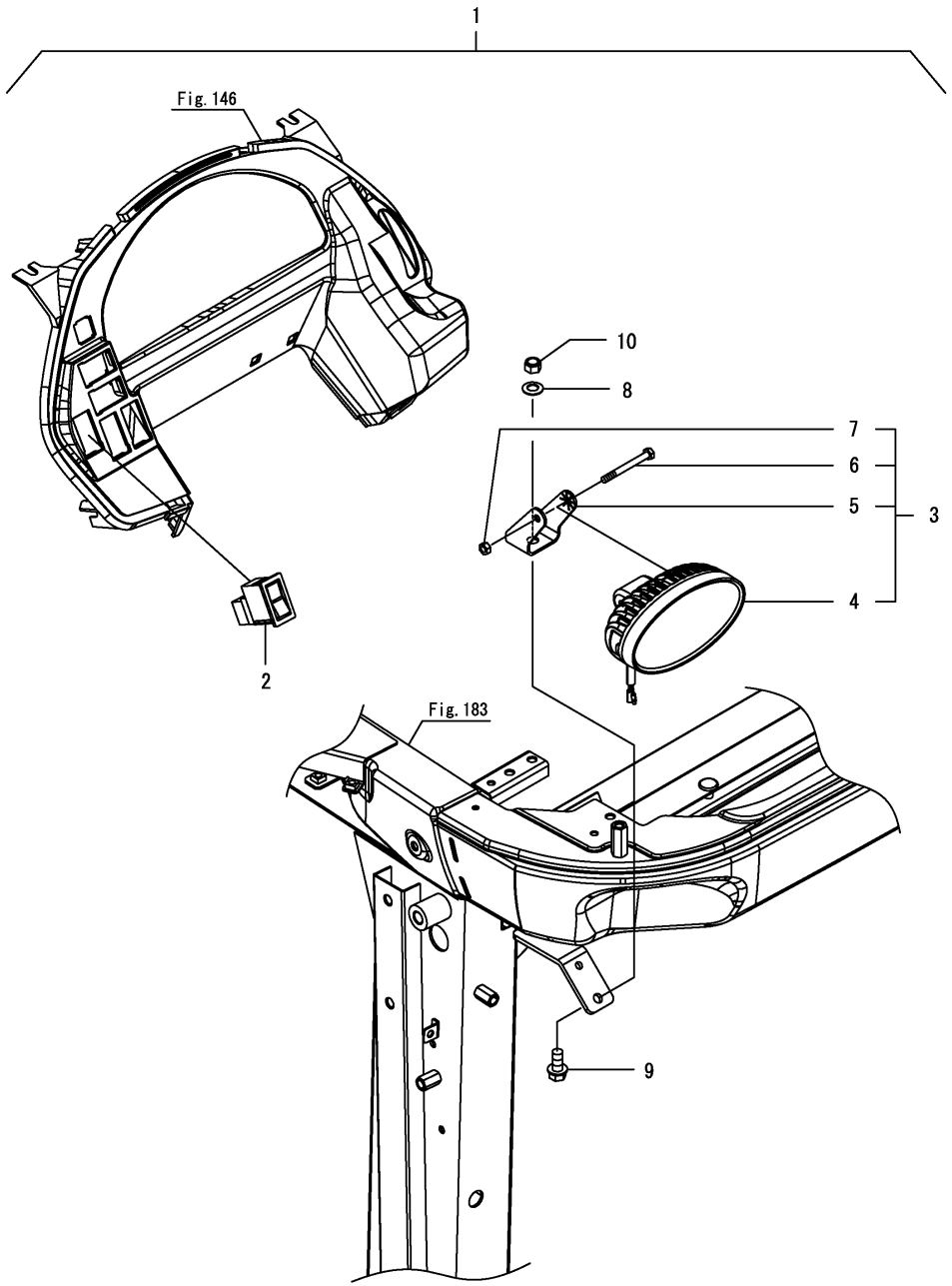

No.	Lev.	Parts No.	Description	Q'ty (A)	(B)	(C)	(D)	(E)	(F)	I	R
1	1	1A8426-53430	LAMP KIT, WORK LED	1							
2	2	1A7805-52550	SWITCH, WORK LAMP	1							
3	2	1A8060-54103	LAMP ASSY, WORK	2							
4	3	1A8060-54112	LAMP, WORK LED	1							
5	3	1A8060-54120	BRACKET, LED LAMP	1							
6	3	1A8060-54130	BOLT, M6X70	1							
7	3	1A8060-54140	NUT, M6	1							
8	2	198255-83550	WASHER, FLAT 8	2							
9	2	1A6280-85540	BOLT, M8X20	2							
10	2	26346-080002	NUT, M8	2							

N:Old $\xleftarrow[\text{No}]{\text{Yes}}$ New, Q:Old $\xleftarrow[\text{Yes}]{\text{No}}$ New, R:Old $\xleftarrow[\text{Yes}]{\text{Yes}}$ New, S:Old $\xleftarrow[\text{No}]{\text{No}}$ New, W:Add, Z:Discontinued, F:Interchangeable by set, K:Q'ty Change

Copyright (C) 2017 YANMAR GLOBAL CS CO., LTD. All RightsReserved.

Fig.208. BEACON LAMP

(A)=YT235Y, EU
(B)=
(C)=
(D)=
(E)=
(F)=

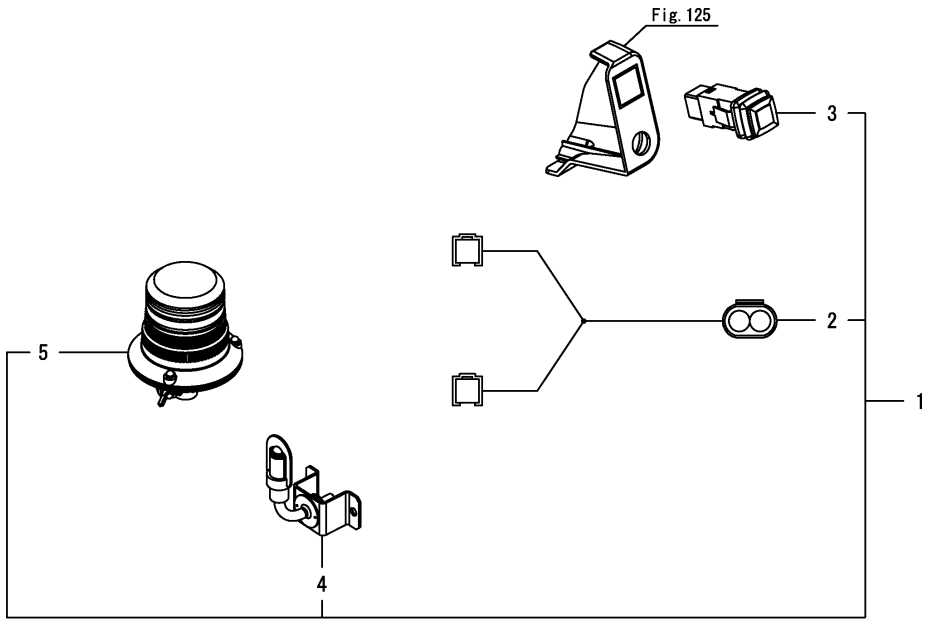

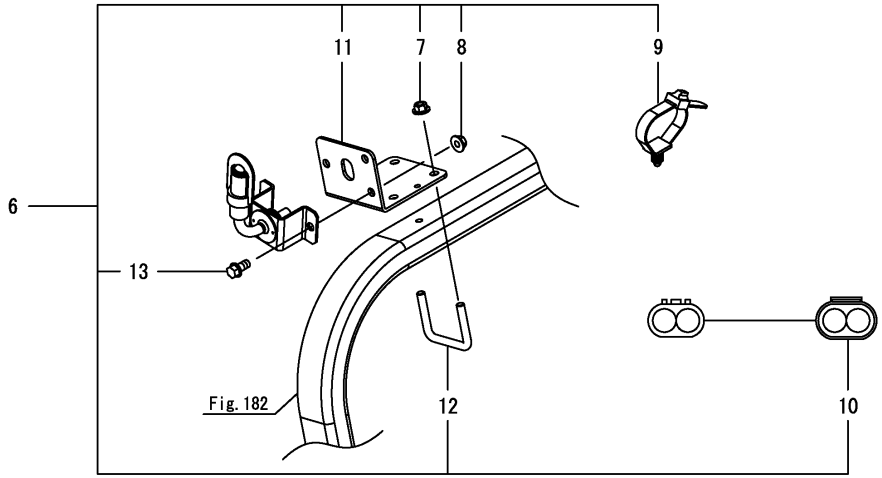

No.	Lev.	Parts No.	Description	Q'ty (A)	(B)	(C)	(D)	(E)	(F)	I	R
1	1	1A8476-53900	LAMP KIT, BEACON	1							
2	2	1A8476-51830	HARNESS,WARNING LMP	1							
3	2	1A8476-52250	SWITCH ASSY,BEACON	1							
4	2	1A8486-53640	BRACKET, BEACOM B	1							
5	2	1A8476-54500	LAMP, WARNING	1							
6	1	1A8426-53910	LAMP KIT,BEACON ROPS	1							
7	2	194990-22150	NUT, M10	4							
8	2	194990-22150	NUT, M10	2							
9	2	1A8300-51210	BAND, REPEAT	4							
10	2	1A8476-51810	HARNESS, WARNING	1							
11	2	1A8406-93130	STAY,BEACON LUMP	1							
12	2	1A8406-93140	U-BOLT, M10	2							
13	2	26106-100202	BOLT, M10X 20 PLATED	2							

N:Old $\xleftarrow[\text{No}]{\text{Yes}}$ New, Q:Old $\xleftarrow[\text{Yes}]{\text{No}}$ New, R:Old $\xleftarrow[\text{Yes}]{\text{Yes}}$ New, S:Old $\xleftarrow[\text{No}]{\text{No}}$ New, W:Add, Z:Discontinued, F:Interchangeable by set, K:Q'ty Change

Copyright (C) 2017 YANMAR GLOBAL CS CO., LTD. All RightsReserved.

Fig.209. BEACON LAMP(CABIN)

(A)=YT235Y, EU
(B)=
(C)=
(D)=
(E)=
(F)=

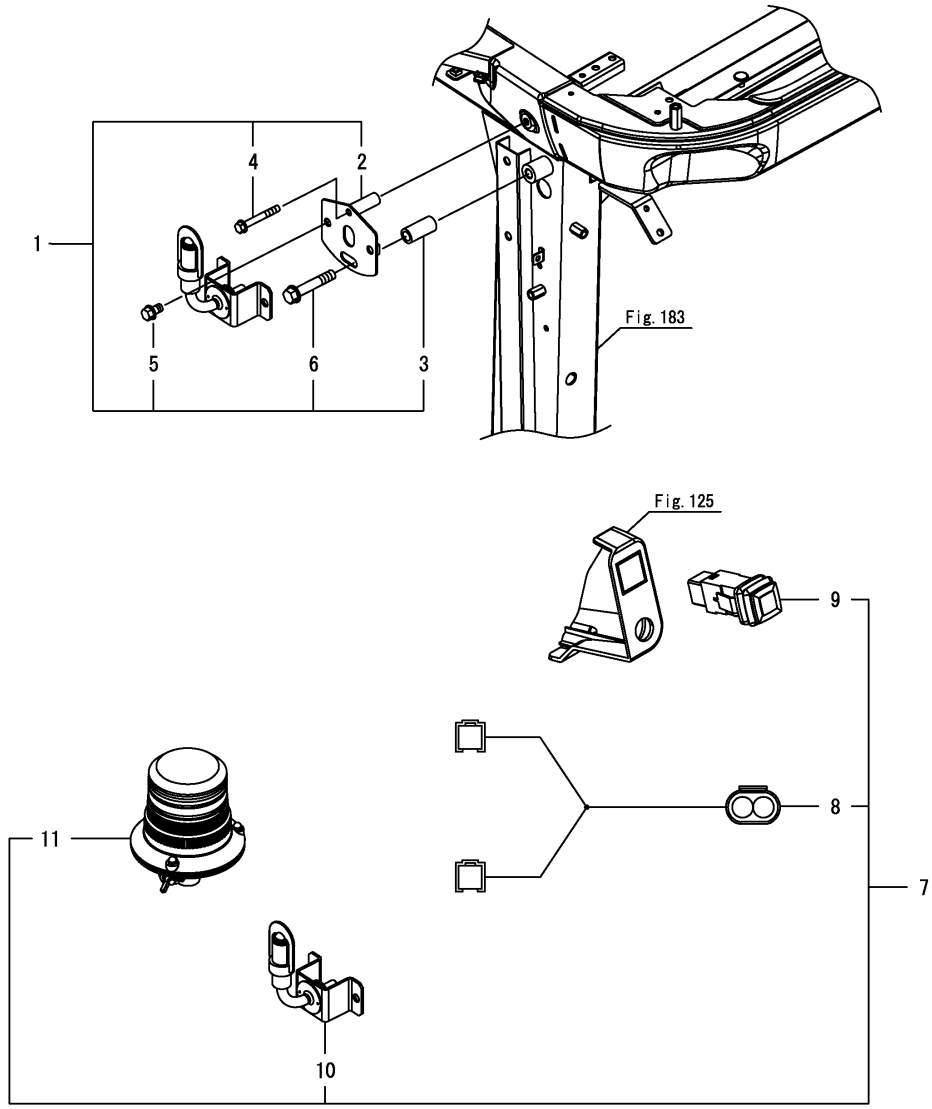

No.	Lev.	Parts No.	Description	Q'ty (A)	(B)	(C)	(D)	(E)	(F)	I	R
1	1	1A8426-53900	LAMP KIT, BEACON CAB	1							
2	2	1A8426-93120	STAY ASSY,BEACON LAM	1							
3	2	1A8426-93150	COLLAR, D20X43	1							
4	2	26106-080602	BOLT, M8X 60 PLATED	1							
5	2	26106-100162	BOLT, M10X 16 PLATED	2							
6	2	26106-120652	BOLT, M12X 65 PLATED	1							
7	1	1A8476-53900	LAMP KIT, BEACON	1							
8	2	1A8476-51830	HARNESS,WARNING LMP	1							
9	2	1A8476-52250	SWITCH ASSY,BEACON	1							
10	2	1A8486-53640	BRACKET, BEACOM B	1							
11	2	1A8476-54500	LAMP, WARNING	1							

N:Old $\xleftarrow[\text{No}]{\text{Yes}}$ New, Q:Old $\xleftarrow[\text{Yes}]{\text{No}}$ New, R:Old $\xleftarrow[\text{Yes}]{\text{Yes}}$ New, S:Old $\xleftarrow[\text{No}]{\text{No}}$ New, W:Add, Z:Discontinued, F:Interchangeable by set, K:Q'ty Change

Copyright (C) 2017 YANMAR GLOBAL CS CO., LTD. All RightsReserved.

Fig.210. LADDER HITCH

(A)=YT235Y, EU
(B)=
(C)=
(D)=
(E)=
(F)=

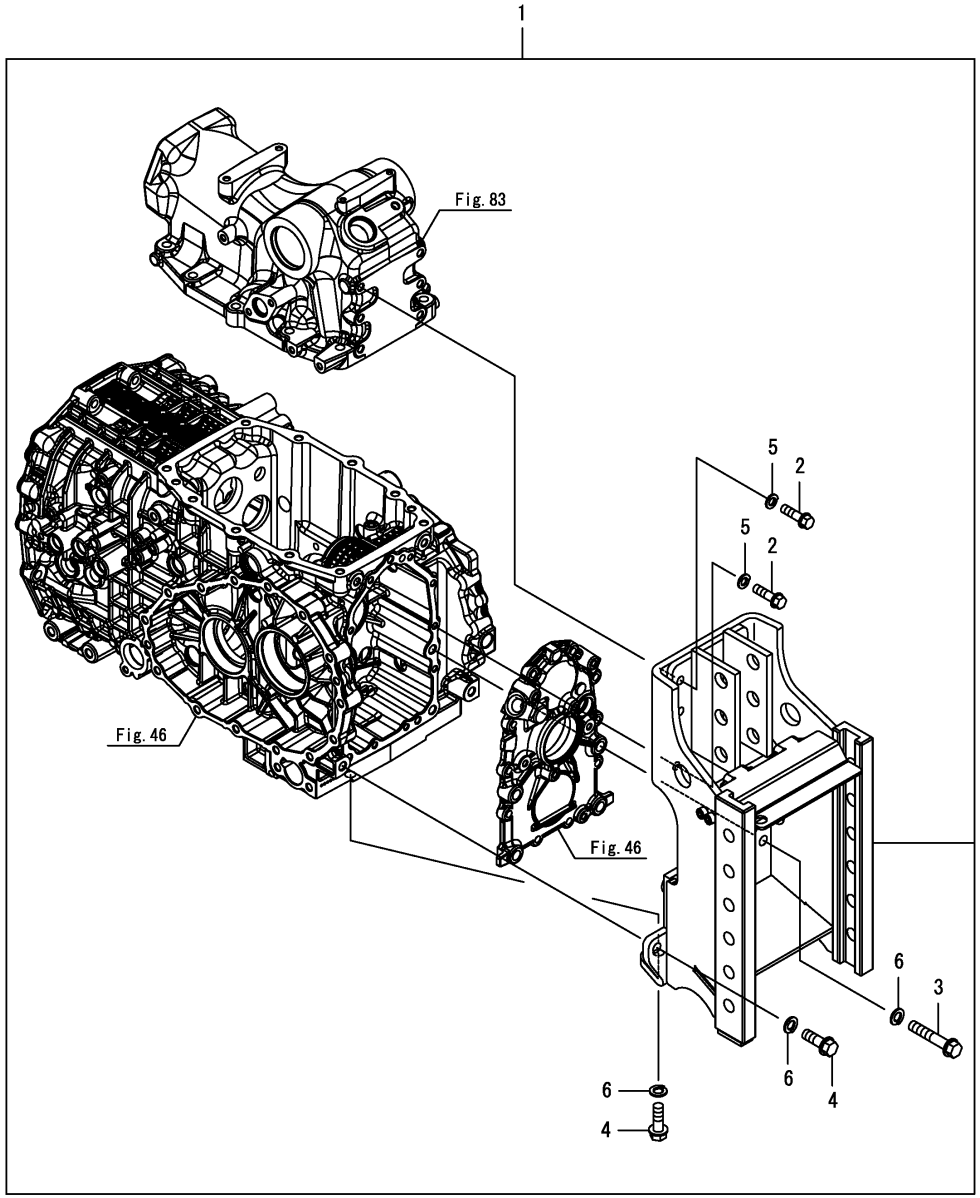

No.	Lev.	Parts No.	Description	Q'ty (A)	(B)	(C)	(D)	(E)	(F)	I	R
1	1	1A8406-76020	HITCH KIT, LADDER M	1							
2	2	1A8406-76500	BOLT, M10X40	8							
3	2	1A8406-76510	BOLT, M12X60	2							
4	2	1A8406-76520	BOLT, M12X35	4							
5	2	1A8406-76600	WASHER, 10	8							
6	2	1A8406-76610	WASHER, 12	6							

N:Old $\xleftarrow[\text{No}]{\text{Yes}}$ New, Q:Old $\xleftarrow[\text{Yes}]{\text{No}}$ New, R:Old $\xleftarrow[\text{Yes}]{\text{Yes}}$ New, S:Old $\xleftarrow[\text{No}]{\text{No}}$ New, W:Add, Z:Discontinued, F:Interchangeable by set, K:Q'ty Change

Copyright (C) 2017 YANMAR GLOBAL CS CO., LTD. All RightsReserved.

Fig.211. ADAPTER(LADDER HITCH)(1)

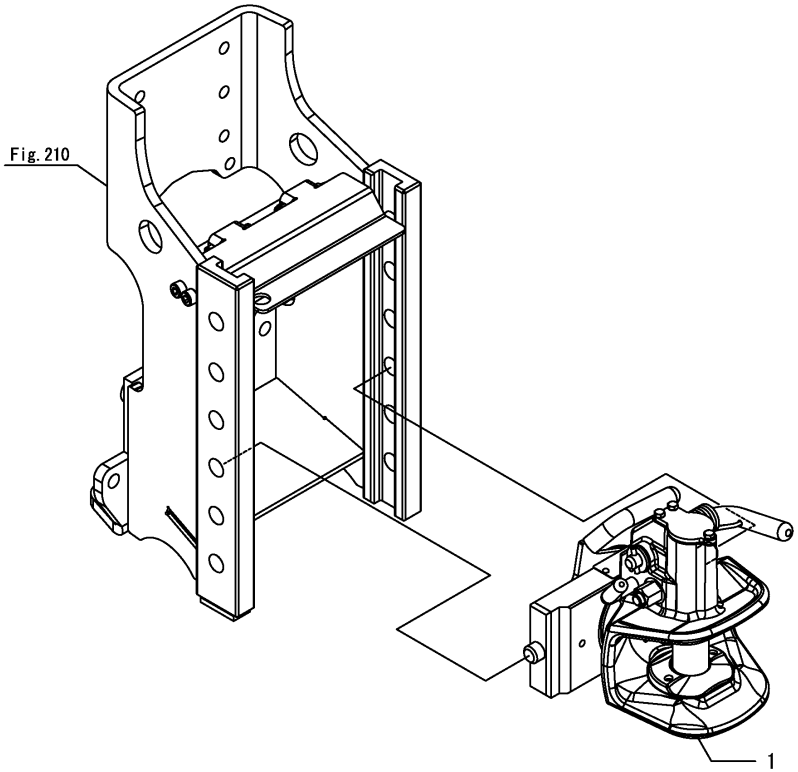

(A)=YT235Y, EU
(B)=
(C)=
(D)=
(E)=
(F)=

No.	Lev.	Parts No.	Description	Q'ty (A)	(B)	(C)	(D)	(E)	(F)	I	R
1	1	1A8406-76100	ADAPTER KIT, TYPE 1	1							

N:Old $\xleftrightarrow[\text{No}]{\text{Yes}}$ New, Q:Old $\xleftrightarrow[\text{Yes}]{\text{No}}$ New, R:Old $\xleftrightarrow[\text{Yes}]{\text{Yes}}$ New, S:Old $\xleftrightarrow[\text{No}]{\text{No}}$ New, W:Add, Z:Discontinued, F:Interchangeable by set, K:Q'ty Change

Copyright (C) 2017 YANMAR GLOBAL CS CO., LTD. All RightsReserved.

Fig.212. ADAPTER(LADDER HITCH)(2)

(A)=YT235Y, EU
(B)=
(C)=
(D)=
(E)=
(F)=

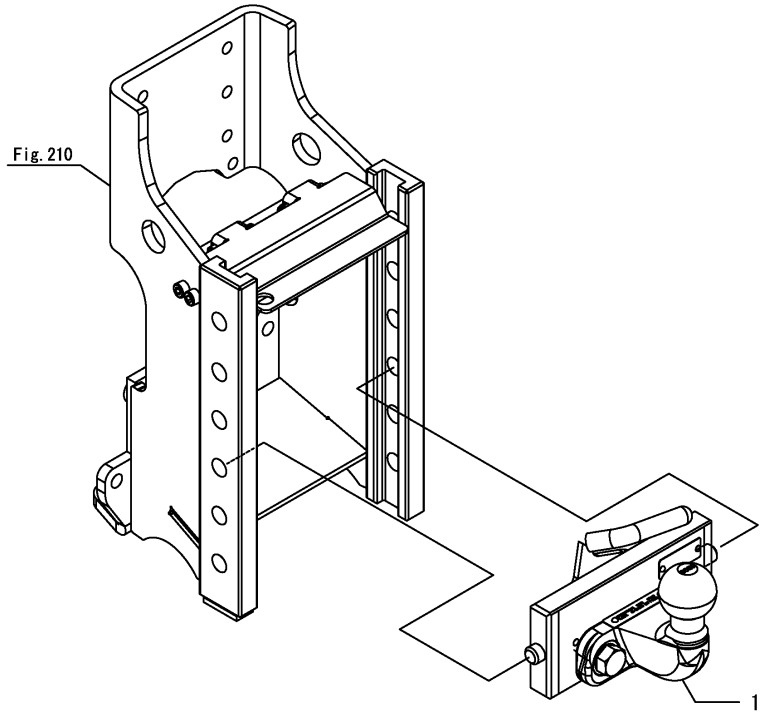

No.	Lev.	Parts No.	Description	Q'ty (A)	(B)	(C)	(D)	(E)	(F)	I	R
1	1	1A8406-76200	ADAPTER KIT, TYPE 2	1							

N:Old ⇄(Yes/No) New, Q:Old ⇄(No/Yes) New, R:Old ⇄(Yes/Yes) New, S:Old ⇄(No/No) New, W:Add, Z:Discontinued, F:Interchangeable by set, K:Q'ty Change

Copyright (C) 2017 YANMAR GLOBAL CS CO., LTD. All RightsReserved.

Fig.213. ADAPTER(LADDER HITCH)(3)

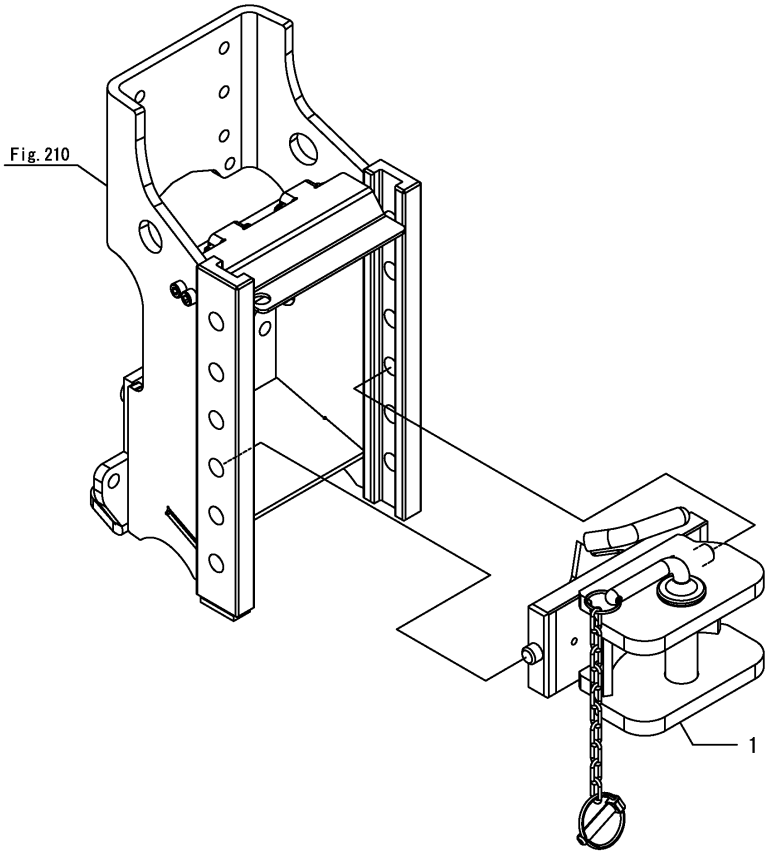

(A)=YT235Y, EU
(B)=
(C)=
(D)=
(E)=
(F)=

No.	Lev.	Parts No.	Description	Q'ty (A)	(B)	(C)	(D)	(E)	(F)	I	R
1	1	1A8406-76300	ADAPTER KIT, TYPE 3	1							

N:Old ◄Yes/No► New, Q:Old ◄No/Yes► New, R:Old ◄Yes/Yes► New, S:Old ◄No/No► New, W:Add, Z:Discontinued, F:Interchangeable by set, K:Q'ty Change

Copyright (C) 2017 YANMAR GLOBAL CS CO., LTD. All RightsReserved.

Fig.214. ADAPTER(LADDER HITCH)(4)

(A)=YT235Y, EU (D)=
(B)= (E)=
(C)= (F)=

No.	Lev.	Parts No.	Description	Q'ty (A)	(B)	(C)	(D)	(E)	(F)	I	R
1	1	1A8406-76400	ADAPTER KIT, TYPE 4	1							

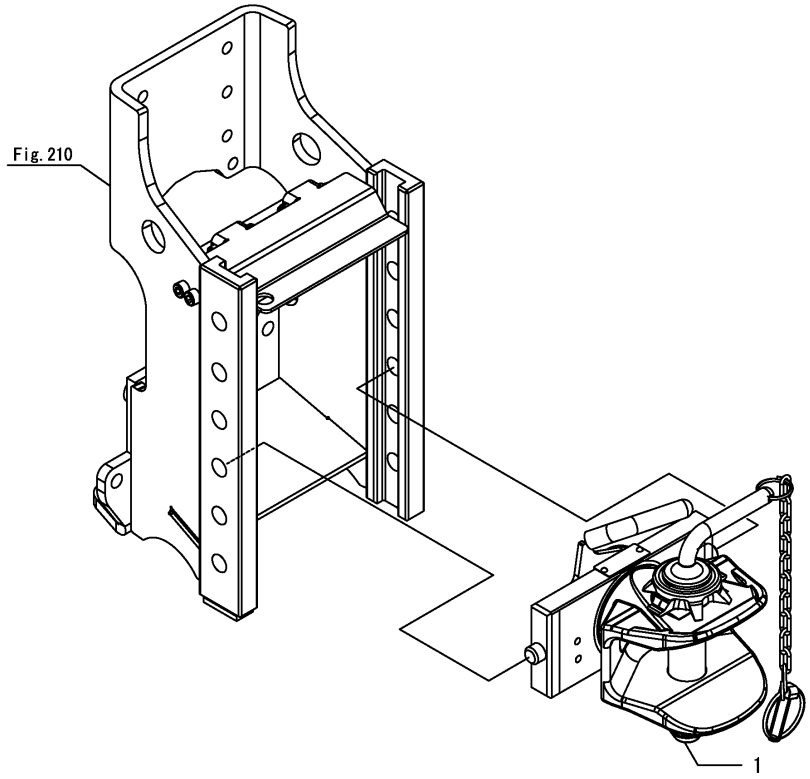

N:Old ◄Yes/No► New, Q:Old ◄No/Yes► New, R:Old ◄Yes/Yes► New, S:Old ◄No/No► New, W:Add, Z:Discontinued, F:Interchangeable by set, K:Q'ty Change

Copyright (C) 2017 YANMAR GLOBAL CS CO., LTD. All RightsReserved.

Fig.215. RADIO(CABIN)

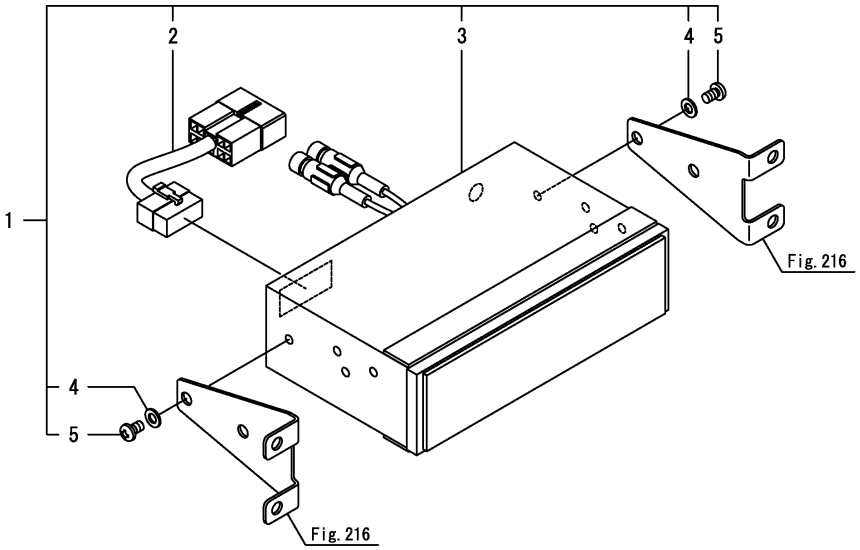

(A)=YT235Y, EU
(B)=
(C)=
(D)=
(E)=
(F)=

No.	Lev.	Parts No.	Description	Q'ty (A)	(B)	(C)	(D)	(E)	(F)	I	R
1	1	1A8485-86100	RADIO KIT,NA DOP	1							
2	2	1A8485-51960	HARNESS,RADIO	1							
3	2	1A8485-86000	RADIO ASSY,NA	1							
4	2	22117-050000	WASHER, 5	4							
5	2	26557-050082	SCREW, M5X 8	4							

N:Old $\xleftrightarrow[\text{No}]{\text{Yes}}$ New, Q:Old $\xleftrightarrow[\text{Yes}]{\text{No}}$ New, R:Old $\xleftrightarrow[\text{Yes}]{\text{Yes}}$ New, S:Old $\xleftrightarrow[\text{No}]{\text{No}}$ New, W:Add, Z:Discontinued, F:Interchangeable by set, K:Q'ty Change

Copyright (C) 2017 YANMAR GLOBAL CS CO., LTD. All RightsReserved.

Fig.216. RADIO MOUNT

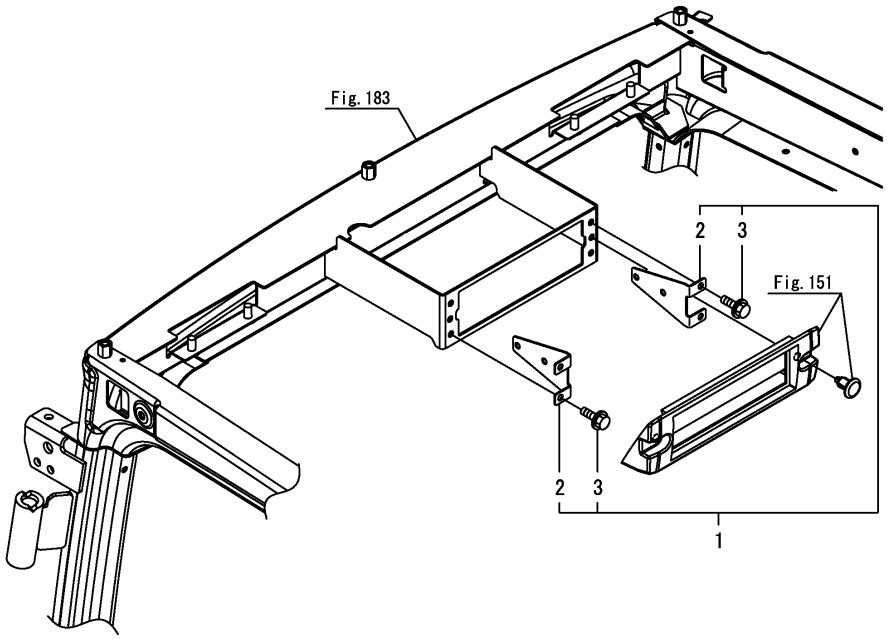

(A)=YT235Y, EU
(B)=
(C)=
(D)=
(E)=
(F)=

No.	Lev.	Parts No.	Description	Q'ty (A)	(B)	(C)	(D)	(E)	(F)	I	R
1	1	1A8425-86510	INSTALL KIT, RADIO	1							
2	2	1A8420-86510	BRACKET,	2							
3	2	26106-060122	BOLT, M6X 12 PLATED	4							

N:Old $\xleftrightarrow[\text{No}]{\text{Yes}}$ New, Q:Old $\xleftrightarrow[\text{Yes}]{\text{No}}$ New, R:Old $\xleftrightarrow[\text{Yes}]{\text{Yes}}$ New, S:Old $\xleftrightarrow[\text{No}]{\text{No}}$ New, W:Add, Z:Discontinued, F:Interchangeable by set, K:Q'ty Change

Copyright (C) 2017 YANMAR GLOBAL CS CO., LTD. All RightsReserved.

Fig.217. EMBLEM(S.M.V.)

(A)=YT235Y, EU
(B)=
(C)=
(D)=
(E)=
(F)=

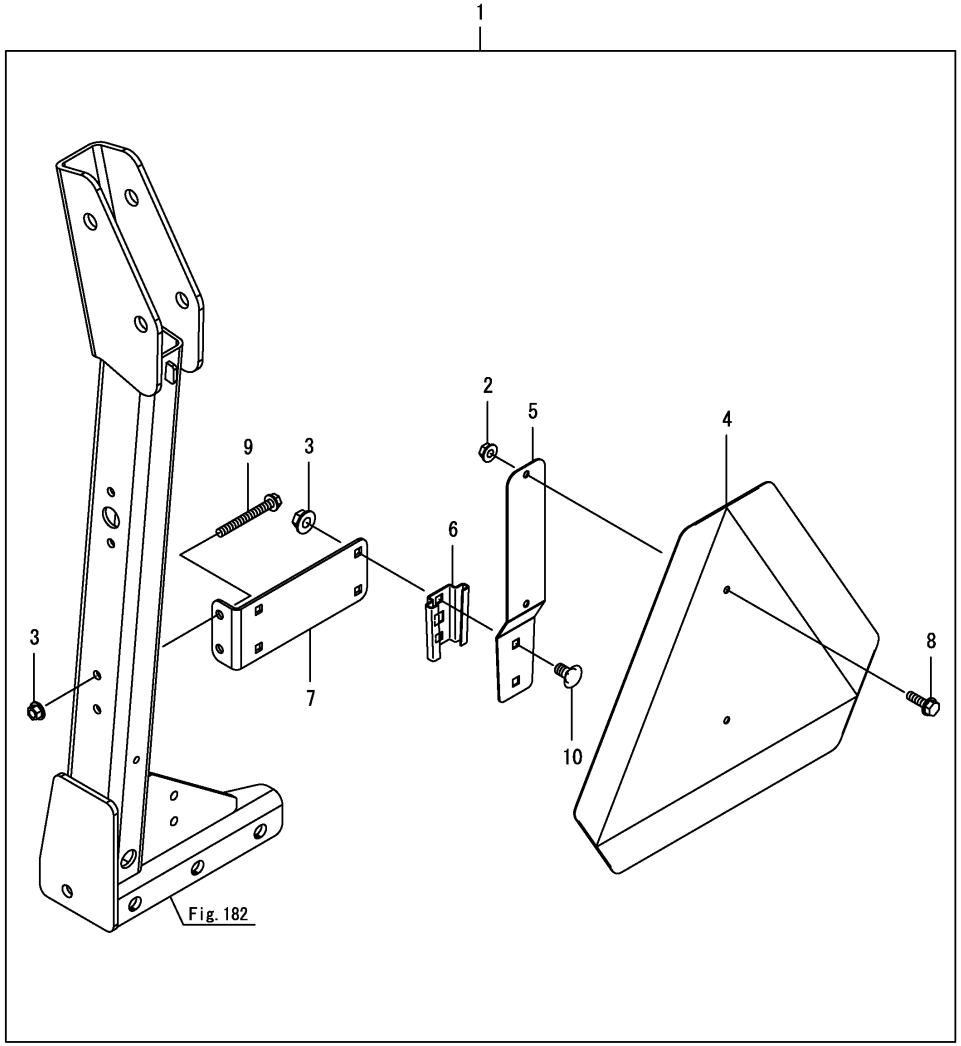

No.	Lev.	Parts No.	Description	Q'ty (A)	(B)	(C)	(D)	(E)	(F)	I	R
1	1	1A8406-93170	EMBLEM ASSY, SMV	1							
2	2	194990-22130	NUT, M6	2							
3	2	194990-22140	NUT, M8	4							
4	2	1A8476-65600	EMBLEM ASSY, SMV	1							
5	2	1A7882-85620	STAY, SMV	1							
6	2	1A7882-85630	HOLDER, SMV	1							
7	2	1A8406-93180	STAY, SMV	1							
8	2	26106-060122	BOLT, M6X 12 PLATED	2							
9	2	26106-080702	BOLT, M8X 70 PLATED	2							
10	2	26487-080163	BOLT, M8X16	2							

N:Old $\xleftrightarrow[\text{No}]{\text{Yes}}$ New, Q:Old $\xleftrightarrow[\text{Yes}]{\text{No}}$ New, R:Old $\xleftrightarrow[\text{Yes}]{\text{Yes}}$ New, S:Old $\xleftrightarrow[\text{No}]{\text{No}}$ New, W:Add, Z:Discontinued, F:Interchangeable by set, K:Q'ty Change

Copyright (C) 2017 YANMAR GLOBAL CS CO., LTD. All RightsReserved.

Fig.218. EMBLEM(S.M.V.)(CABIN)

(A)=YT235Y, EU
(B)=
(C)=
(D)=
(E)=
(F)=

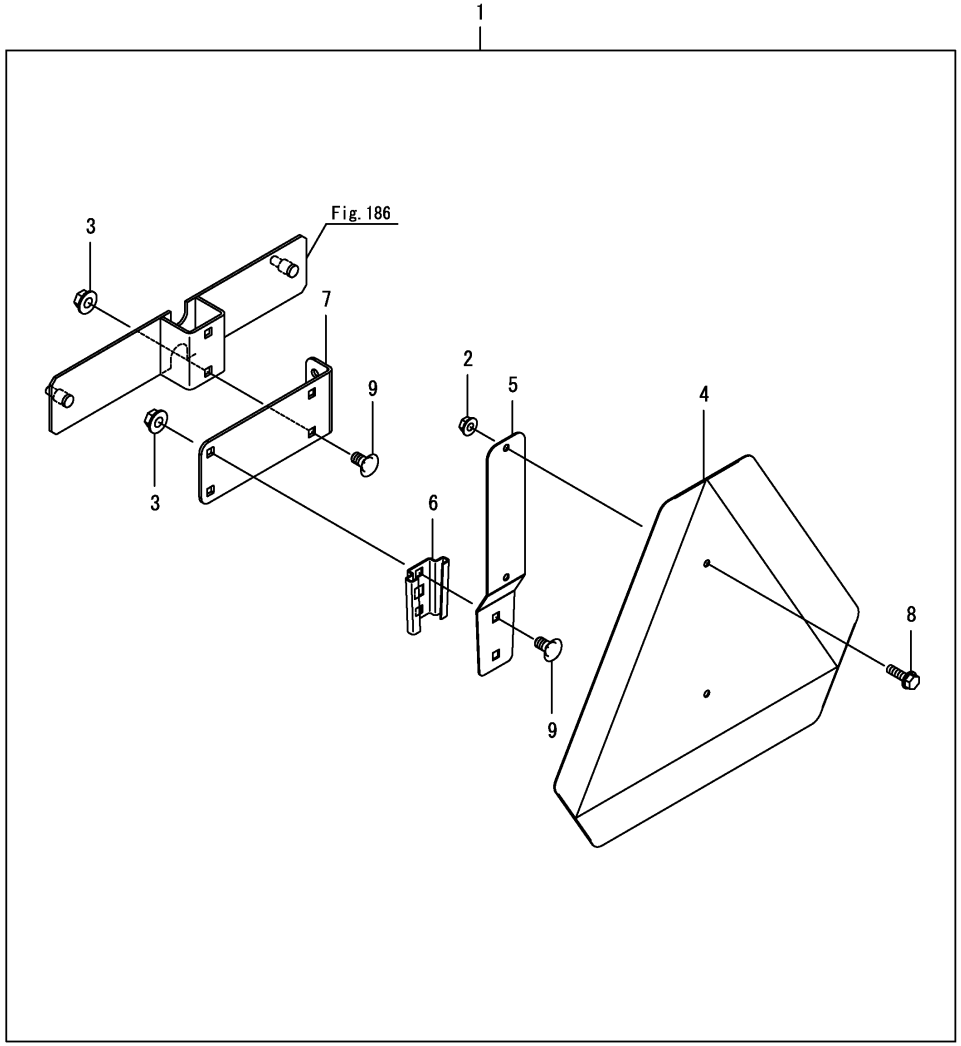

No.	Lev.	Parts No.	Description	Q'ty (A)	(B)	(C)	(D)	(E)	(F)	I	R
1	1	1A8426-93170	EMBLEM ASSY, SMV	1							
2	2	194990-22130	NUT, M6	2							
3	2	194990-22140	NUT, M8	4							
4	2	1A8476-65600	EMBLEM ASSY, SMV	1							
5	2	1A7882-85620	STAY, SMV	1							
6	2	1A7882-85630	HOLDER, SMV	1							
7	2	1A8406-93180	STAY, SMV	1							
8	2	26106-060122	BOLT, M6X 12 PLATED	2							
9	2	26487-080163	BOLT, M8X16	4							

N:Old $\xleftrightarrow[\text{No}]{\text{Yes}}$ New, Q:Old $\xleftrightarrow[\text{Yes}]{\text{No}}$ New, R:Old $\xleftrightarrow[\text{Yes}]{\text{Yes}}$ New, S:Old $\xleftrightarrow[\text{No}]{\text{No}}$ New, W:Add, Z:Discontinued, F:Interchangeable by set, K:Q'ty Change

Copyright (C) 2017 YANMAR GLOBAL CS CO., LTD. All RightsReserved.

Fig.219. FRONT WEIGHT HITCH

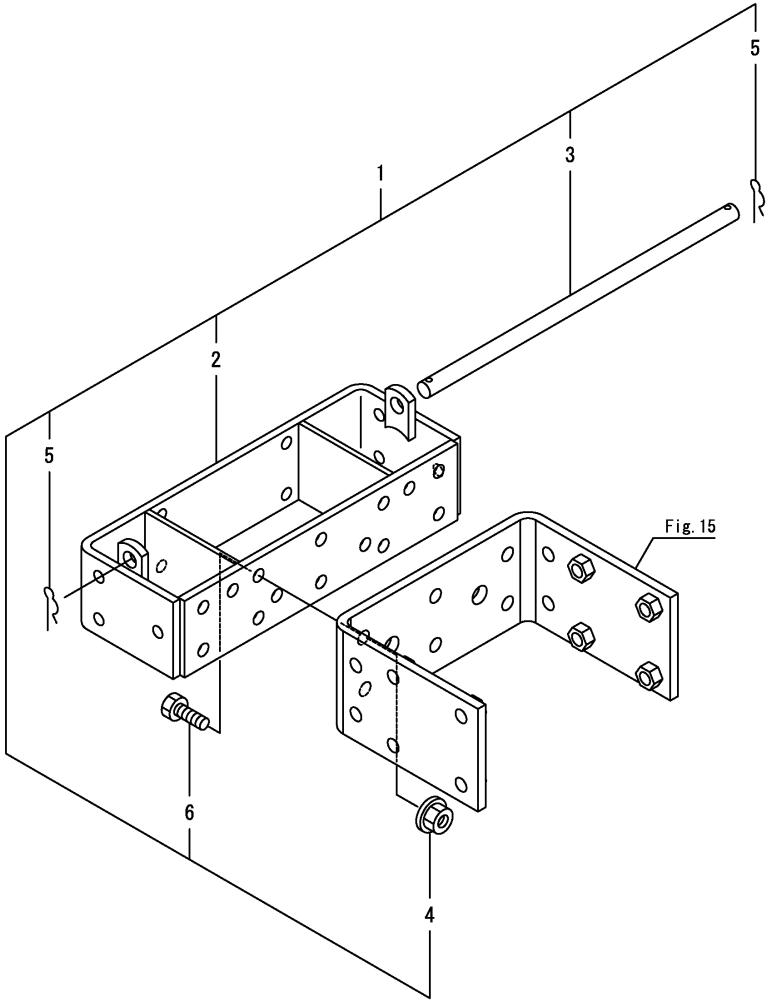

(A)=YT235Y, EU (D)=
(B)= (E)=
(C)= (F)=

No.	Lev.	Parts No.	Description	Q'ty (A)	(B)	(C)	(D)	(E)	(F)	I	R
1	1	1A8160-11051	HITCH KIT, FRONT	1							
2	2	1A8160-11121	HITCH, FRONT	1							
3	2	194197-11140	PIN, WEIGHT LOCK	1							
4	2	194990-22160	NUT, M12	6							
5	2	22372-160000	PIN, SNAP 16	2							
6	2	26116-120352	BOLT, M12X 35 PLATED	6							

N:Old $\overset{\text{Yes}}{\underset{\text{No}}{\leftrightarrows}}$ New, Q:Old $\overset{\text{No}}{\underset{\text{Yes}}{\leftrightarrows}}$ New, R:Old $\overset{\text{Yes}}{\underset{\text{Yes}}{\leftrightarrows}}$ New, S:Old $\overset{\text{No}}{\underset{\text{No}}{\leftrightarrows}}$ New, W:Add, Z:Discontinued, F:Interchangeable by set, K:Q'ty Change

Copyright (C) 2017 YANMAR GLOBAL CS CO., LTD. All RightsReserved.

Fig.220. WORK LAMP

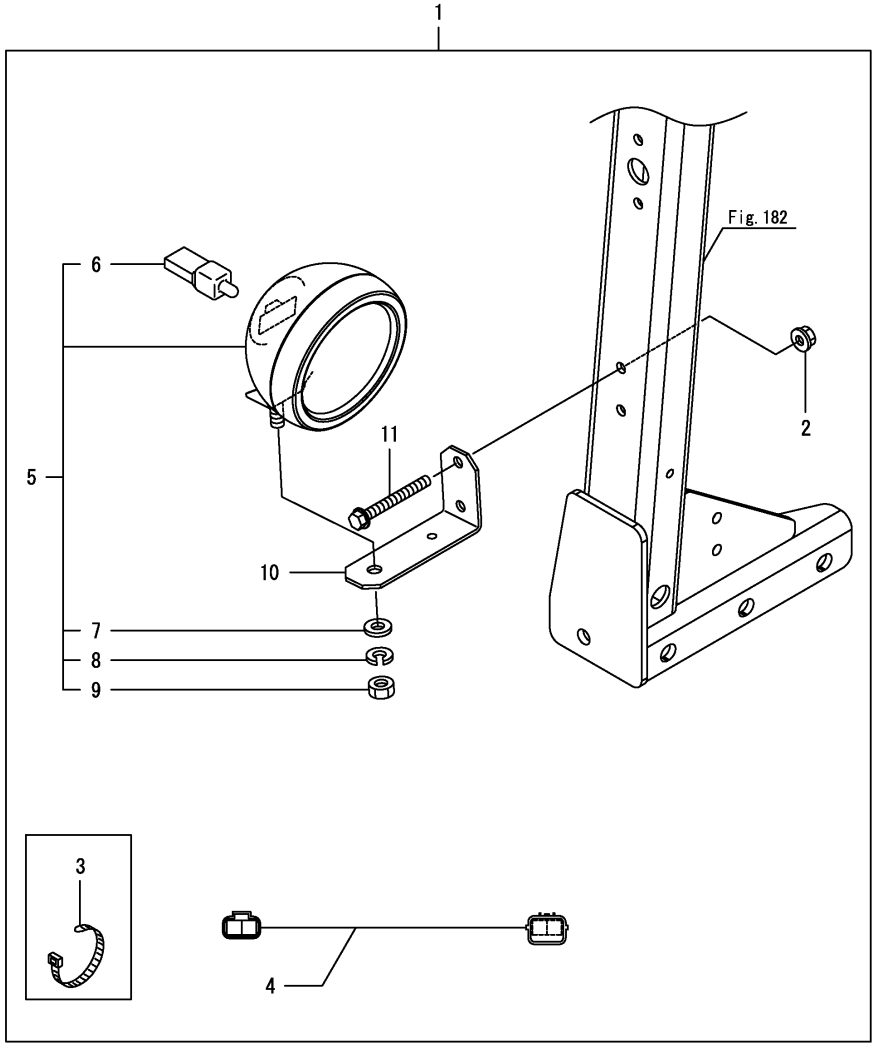

(A)=YT235Y, EU
(B)=
(C)=
(D)=
(E)=
(F)=

No.	Lev.	Parts No.	Description	Q'ty (A)	(B)	(C)	(D)	(E)	(F)	I	R
1	1	1A8426-54980	LAMP KIT,WORK	1							
2	2	194990-22140	NUT, M8	2							
3	2	1A8300-51210	BAND, REPEAT	4							
4	2	1A8475-51910	HARNESS,WORK LMP	1							
5	2	1A7340-54100	LAMP ASSY, WORK	1							
6	3	1A7470-86270	BULB, 12V-35W	1							
7	3	22137-100000	WASHER, 10	1							
8	3	22217-100000	WASHER, SPRING 10	1							
9	3	26736-100002	NUT, M10	1							
10	2	1A8250-99320	STAY, WORK LAMP	1							
11	2	26106-080702	BOLT, M8X 70 PLATED	2							

N:Old $\xleftrightarrow[\text{No}]{\text{Yes}}$ New, Q:Old $\xleftrightarrow[\text{Yes}]{\text{No}}$ New, R:Old $\xleftrightarrow[\text{Yes}]{\text{Yes}}$ New, S:Old $\xleftrightarrow[\text{No}]{\text{No}}$ New, W:Add, Z:Discontinued, F:Interchangeable by set, K:Q'ty Change

Copyright (C) 2017 YANMAR GLOBAL CS CO., LTD. All RightsReserved.

Fig.221. REAR WIPER(CABIN)

(A)=YT235Y, EU
(B)=
(C)=
(D)=
(E)=
(F)=

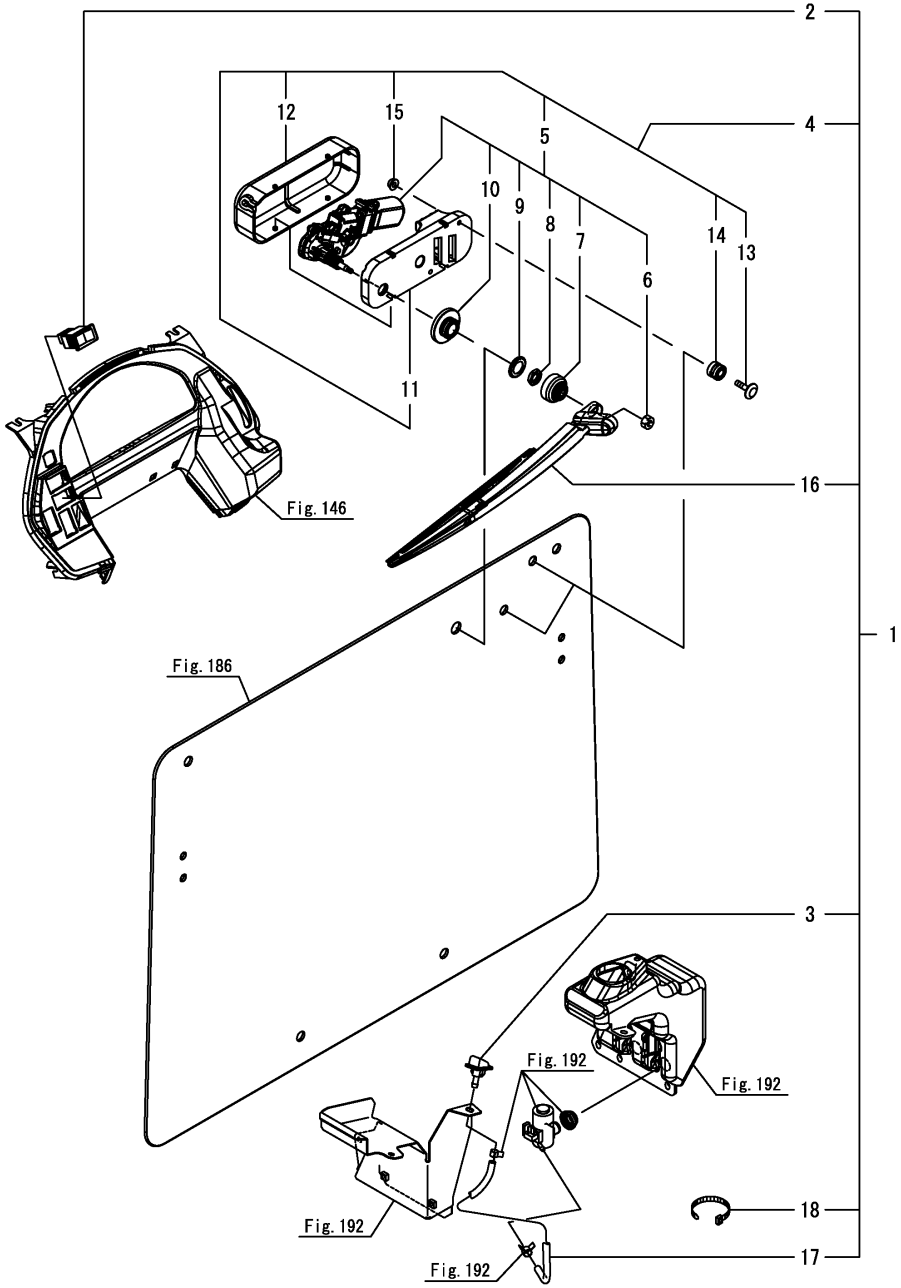

No.	Lev.	Parts No.	Description	Q'ty (A)	(B)	(C)	(D)	(E)	(F)	I	R
1	1	1A8425-86290	MOTOR KIT, WIPER	1							
2	2	1A8060-52530	SWITCH, REAR WIPER	1							
3	2	198094-86060	NOZZLE, WASHER	1							
4	2	1A8110-86300	MOTOR ASSY, WIPER	1							
5	3	1A8110-86310	MOTOR ASSY	1							
6	4	1A8110-86330	NUT, M6	1							
7	4	1A8110-86340	CAP	1							
8	4	1A8110-86350	NUT, M16	1							
9	4	1A8110-86360	WASHER	1							
10	4	1A8110-86370	GASKET	1							
11	3	1A8110-86450	PLATE, BASE	1							
12	3	1A8110-86460	COVER, MOTOR	1							
13	3	1A8110-86470	BOLT, W/COLLAR	2							
14	3	1A8110-86480	GROMMET	2							
15	3	1A8110-86490	NUT, FLANGE M6	2							
16	2	1A8420-86400	WIPER ASSY, FRONT	1							
17	2	1E8080-95660	PIPE, 5X8X320	1							
18	2	29622-140001	BAND, RF140	1							

N:Old $\xleftrightarrow[\text{No}]{\text{Yes}}$ New, Q:Old $\xleftrightarrow[\text{Yes}]{\text{No}}$ New, R:Old $\xleftrightarrow[\text{Yes}]{\text{Yes}}$ New, S:Old $\xleftrightarrow[\text{No}]{\text{No}}$ New, W:Add, Z:Discontinued, F:Interchangeable by set, K:Q'ty Change

Copyright (C) 2017 YANMAR GLOBAL CS CO., LTD. All RightsReserved.

Fig.222. MID P.T.O. UNIT

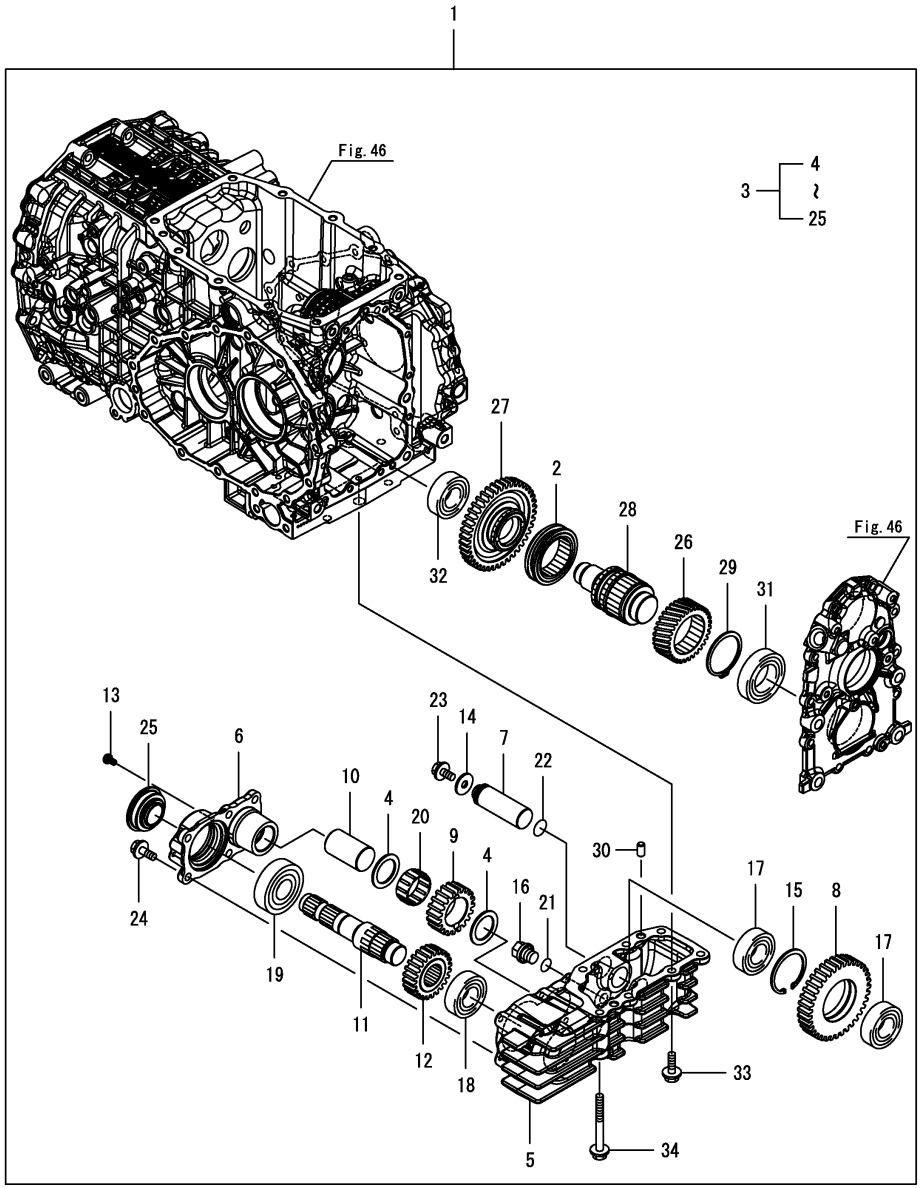

(A)=YT235Y, EU
(B)=
(C)=
(D)=
(E)=
(F)=

No.	Lev.	Parts No.	Description	Q'ty (A)	(B)	(C)	(D)	(E)	(F)	I	R
1	1	1A8416-26301	PTO KIT, MID	1							1
2	2	1A8415-26330	SHIFTER, PTO	1							
3	2	1A8416-26400	PTO UNIT,MID	1							
4	3	1A8310-25610	WASHER, THRUST 30	2							
5	3	1A8415-26410	CASE, MPTO	1							
6	3	1A8415-26420	COVER, MPTO CASE	1							
7	3	1A8415-26540	SHAFT, MPTO A	1							
8	3	1A8415-26550	GEAR, MPTO 38	1							
9	3	1A8415-26560	GEAR, MPTO 21	1							
10	3	1A8415-26570	SHAFT, MPTO B	1							
11	3	1A8415-26580	SHAFT, MPTO	1							
12	3	1A8415-26590	GEAR, MPTO 23	1							
13	3	194250-32530	PIN, COVER HOOK	2							
14	3	22157-080000	WASHER, 8	1							
15	3	22252-000520	RING, 52	1							
16	3	23491-140002	PLUG, 14	1							
17	3	24101-062054	BEARING, BALL 6205	2							
18	3	24101-062054	BEARING, BALL 6205	1							
19	3	24101-063054	BEARING, BALL 6305	1							
20	3	24161-303520	BEARING, 303520	1							
21	3	24311-000160	O-RING, 1AP16.0	1							
22	3	24311-000200	O-RING, 1AP20.0	1							
23	3	26106-080162	BOLT, M8X 16 PLATED	1							
24	3	26106-080202	BOLT, M8X 20 PLATED	6							
25	3	933147-10350	SEAL,OIL QLF25471121	1							
26	2	1A8415-26520	GEAR, MPTO 33	1							
27	2	1A8415-26530	GEAR, MPTO 42	1							
28	2	1A8415-26610	SHAFT, IDLE GEAR	1							
29	2	22242-000500	RING, 50	1							
30	2	22312-080140	PIN, PARALLEL M8X14	2							
31	2	24101-060074	BEARING, BALL 6007	1							
32	2	24101-062054	BEARING, BALL 6205	1							
33	2	26106-080252	BOLT, M8X 25 PLATED	5							
34	2	26106-080752	BOLT, M8X 75 PLATED	2							

Remarks
(1)MID PTO KIT include Fig.No.222,223.

N:Old $\overset{\text{Yes}}{\underset{\text{No}}{\leftrightarrow}}$ New, Q:Old $\overset{\text{No}}{\underset{\text{Yes}}{\leftrightarrow}}$ New, R:Old $\overset{\text{Yes}}{\underset{\text{Yes}}{\leftrightarrow}}$ New, S:Old $\overset{\text{No}}{\underset{\text{No}}{\leftrightarrow}}$ New, W:Add, Z:Discontinued, F:Interchangeable by set, K:Q'ty Change

Copyright (C) 2017 YANMAR GLOBAL CS CO., LTD. All RightsReserved.

Fig.223. MID P.T.O. LEVER

(A)=YT235Y, EU
(B)=
(C)=
(D)=
(E)=
(F)=

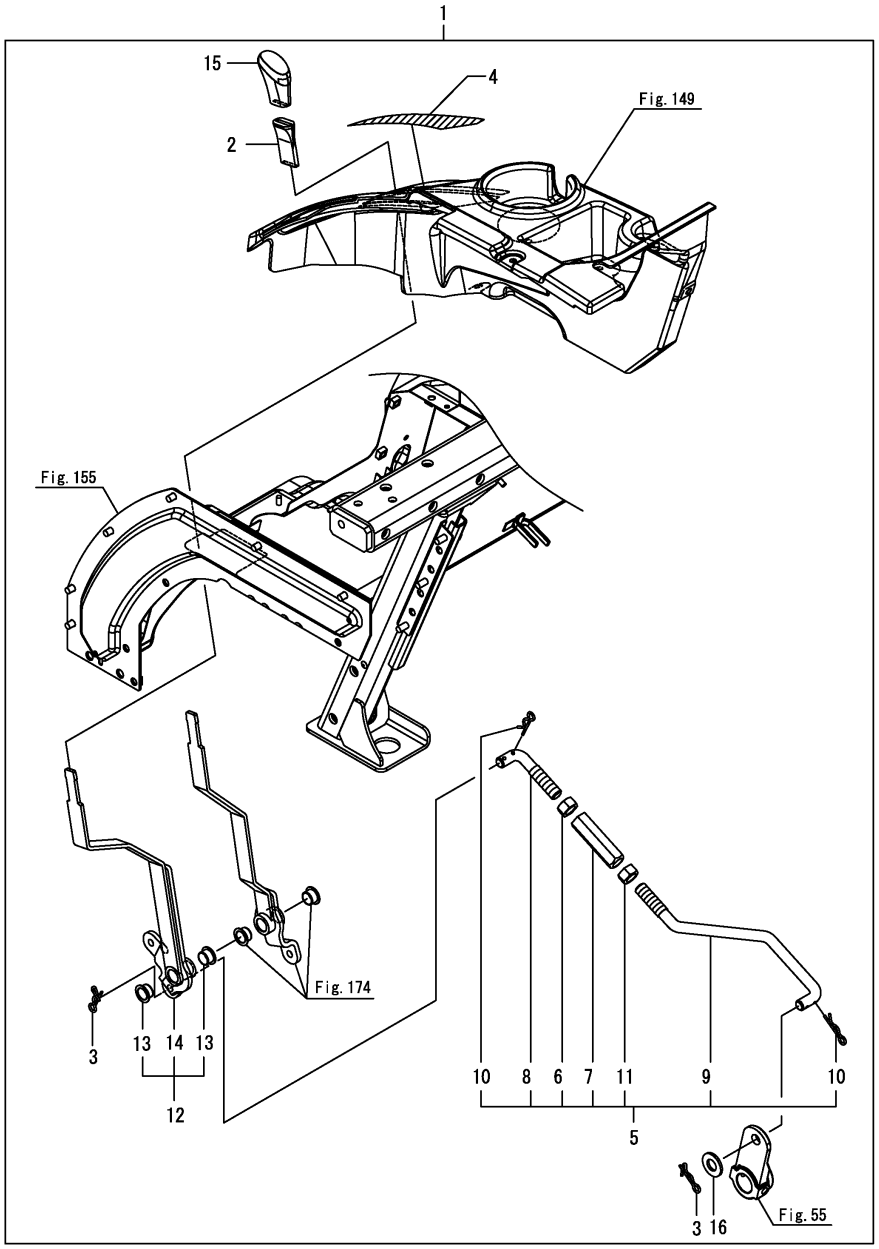

No.	Lev.	Parts No.	Description	Q'ty (A)	(B)	(C)	(D)	(E)	(F)	I	R
1	1	1A8416-26301	PTO KIT, MID	1							1
2	2	198072-27880	BOOT, SHAFT	1							
3	2	1C6281-52320	PIN, SNAP 8	2							
4	2	1A8405-65353	LABEL, SUB SHIFT PTO	1							
5	2	1A8405-67701	ROD UNIT, PTO	1							
6	3	194150-22480	NUT, M10 L	1							
7	3	194250-47490	TURNBUCKLE, M10X50	1							
8	3	1A8405-67710	ROD, PTO L	1							
9	3	1A8405-67721	ROD, PTO R	1							
10	3	22372-080000	PIN, SNAP 8	2							
11	3	26716-100002	NUT, M10	1							
12	2	1A8400-67900	LEVER UNIT, PTO	1							
13	3	1S6489-63330	BUSH, LFF 1610	2							
14	3	1A8400-67920	LEVER ASSY, PTO	1							
15	2	1A8060-68310	KNOB, YELLOW	1							
16	2	22137-100000	WASHER, 10	1							

Remarks
(1)MID PTO KIT include Fig.No.222,223.

N:Old $\overset{\text{Yes}}{\underset{\text{No}}{\leftrightarrows}}$ New, Q:Old $\overset{\text{No}}{\underset{\text{Yes}}{\leftrightarrows}}$ New, R:Old $\overset{\text{Yes}}{\underset{\text{Yes}}{\leftrightarrows}}$ New, S:Old $\overset{\text{No}}{\underset{\text{No}}{\leftrightarrows}}$ New, W:Add, Z:Discontinued, F:Interchangeable by set, K:Q'ty Change

Copyright (C) 2017 YANMAR GLOBAL CS CO., LTD. All RightsReserved.

Fig.224. P.S.T. SEAL

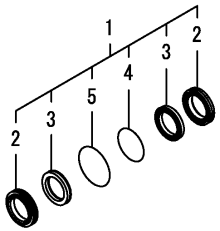

(A)=YT235Y, EU
(B)=
(C)=
(D)=
(E)=
(F)=

No.	Lev.	Parts No.	Description	Q'ty (A)	(B)	(C)	(D)	(E)	(F)	I	R
1	1	1A8400-17100	SEAL KIT, A	1							
2	2	1A8400-17140	SCRAPER, 25	2							
3	2	1A8400-17150	PACKING, 25	2							
4	2	24315-000350	O-RING, 1BP35.0	1							
5	2	24341-000420	O-RING, 1AS42.0	1							

N:Old $\xleftrightarrow[\text{No}]{\text{Yes}}$ New, Q:Old $\xleftrightarrow[\text{Yes}]{\text{No}}$ New, R:Old $\xleftrightarrow[\text{Yes}]{\text{Yes}}$ New, S:Old $\xleftrightarrow[\text{No}]{\text{No}}$ New, W:Add, Z:Discontinued, F:Interchangeable by set, K:Q'ty Change

Copyright (C) 2017 YANMAR GLOBAL CS CO., LTD. All RightsReserved.

Fig.225. DRIVER SEAT(DELUXE MS)

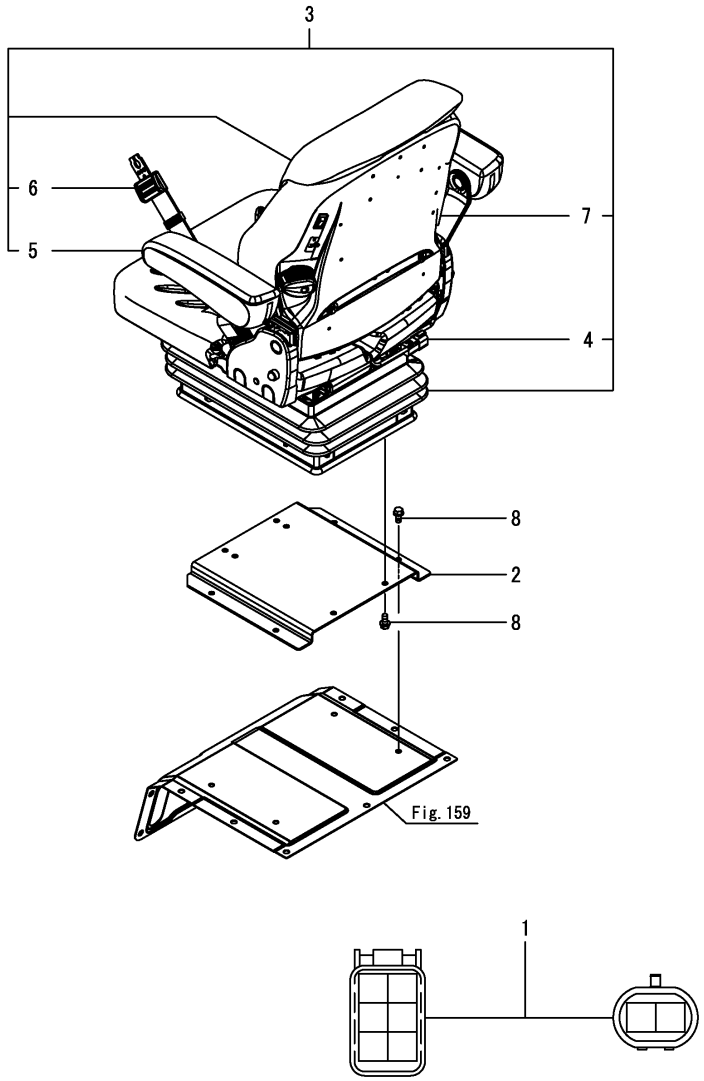

(A)=YT235Y, EU
(B)=
(C)=
(D)=
(E)=
(F)=

No.	Lev.	Parts No.	Description	Q'ty (A)	(B)	(C)	(D)	(E)	(F)	I	R
1	1	1A8426-51910	HARNESS ASSY, SEAT	1							
2	1	1A8406-63110	PLATE, SEAT MOUNT	1							
3	1	1A8426-63200	SEAT KIT, DELUXE MS	1							
4	2	1A8426-52350	SWITCH, SEAT	1							
5	2	1A8426-63240	ARMREST KIT	1							
6	2	1A8426-63250	SEATBELT KIT	1							
7	2	1A8426-63260	SEAT, BACKREST	1							
8	1	26106-080162	BOLT, M8X 16 PLATED	8							

N:Old $\xleftarrow[\text{No}]{\text{Yes}}$ New, Q:Old $\xleftarrow[\text{Yes}]{\text{No}}$ New, R:Old $\xleftarrow[\text{Yes}]{\text{Yes}}$ New, S:Old $\xleftarrow[\text{No}]{\text{No}}$ New, W:Add, Z:Discontinued, F:Interchangeable by set, K:Q'ty Change

Copyright (C) 2017 YANMAR GLOBAL CS CO., LTD. All RightsReserved.

Fig.226. DRIVER SEAT(DELUXE AS)

(A)=YT235Y, EU
(B)=
(C)=
(D)=
(E)=
(F)=

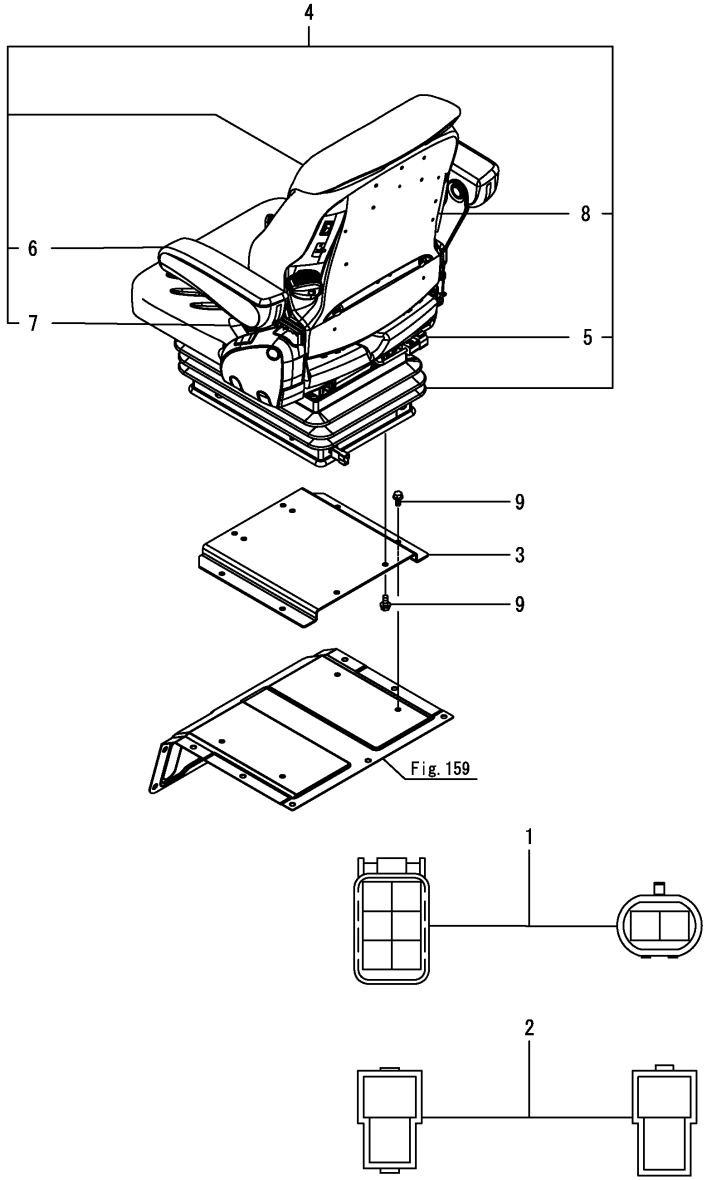

No.	Lev.	Parts No.	Description	Q'ty (A)	(B)	(C)	(D)	(E)	(F)	I	R
1	1	1A8426-51910	HARNESS ASSY, SEAT	1							
2	1	1A8426-51920	HARNESS ASSY, AIR SU	1							
3	1	1A8406-63110	PLATE, SEAT MOUNT	1							
4	1	1A8426-63300	SEAT KIT, DELUXUE AS	1							
5	2	1A8426-52350	SWITCH, SEAT	1							
6	2	1A8426-63240	ARMREST KIT	1							
7	2	1A8426-63250	SEATBELT KIT	1							
8	2	1A8426-63260	SEAT, BACKREST	1							
9	1	26106-080162	BOLT, M8X 16 PLATED	8							

N:Old $\xleftrightarrow[\text{No}]{\text{Yes}}$ New, Q:Old $\xleftrightarrow[\text{Yes}]{\text{No}}$ New, R:Old $\xleftrightarrow[\text{Yes}]{\text{Yes}}$ New, S:Old $\xleftrightarrow[\text{No}]{\text{No}}$ New, W:Add, Z:Discontinued, F:Interchangeable by set, K:Q'ty Change

Copyright (C) 2017 YANMAR GLOBAL CS CO., LTD. All RightsReserved.

Fig.227. DRIVER SEAT

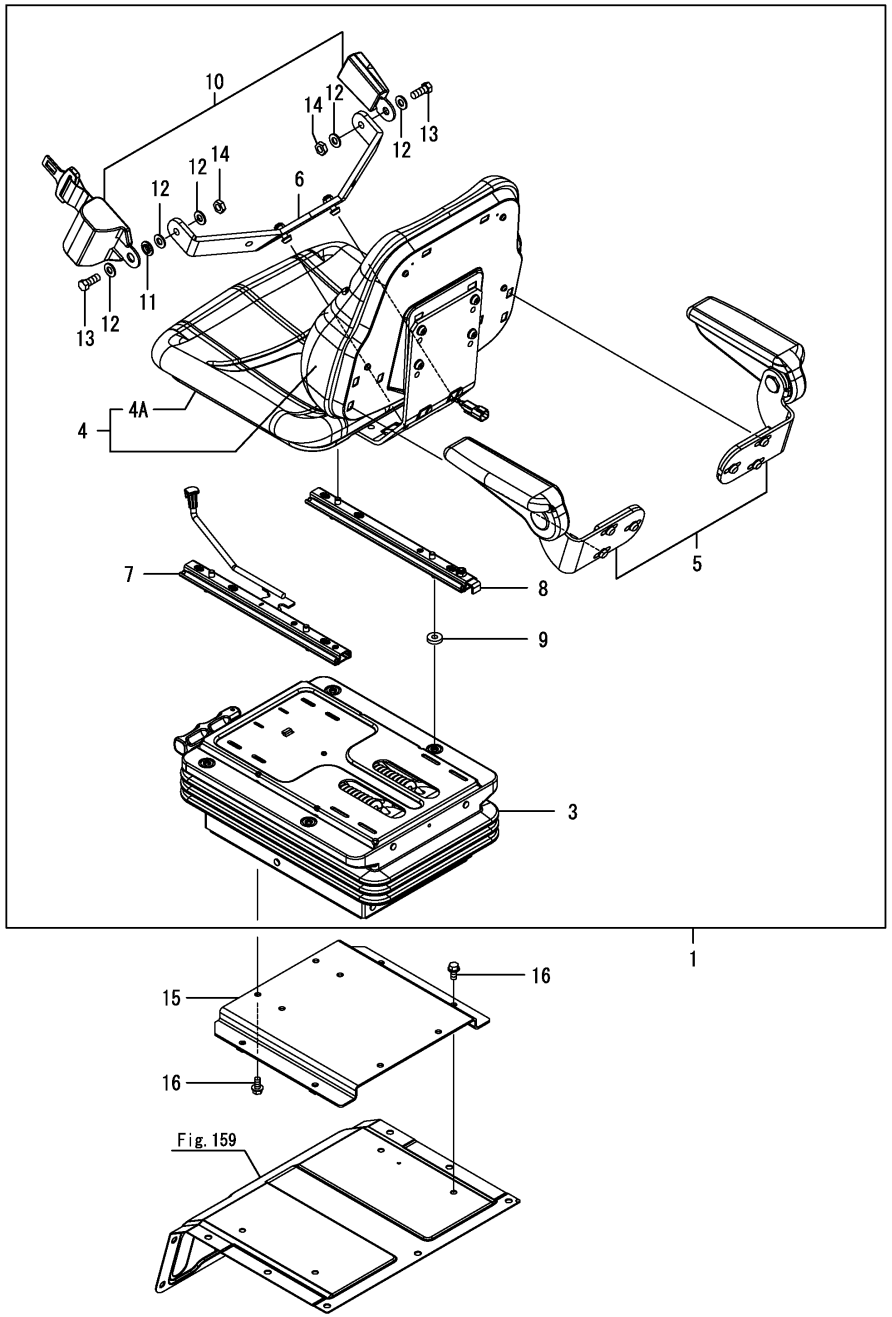

(A)=YT235Y, EU
(B)=
(C)=
(D)=
(E)=
(F)=

No.	Lev.	Parts No.	Description	Q'ty (A)	(B)	(C)	(D)	(E)	(F)	I	R
1	1	1A8426-63100	SEAT KIT, FABRIC BLK	1							
3	2	1A8406-63120	SUSPENSION ASSY,SEAT	1							
4	2	1A8426-63130	SEAT ASSY,FABRIC BLK	1							
4A	3	1A842E-63110	SEAT, FABRIC CUSHION	1							
5	2	1A8406-63140	ARMREST KIT	1							
6	2	1A8406-63160	BRACKET, SEATBELT	1							
7	2	1A8406-63170	RAIL ASSY,L W HANDLE	1							
8	2	1A8406-63180	RAIL ASSY, R	1							
9	2	1A8406-63190	SPACER, SEAT RAIL	4							
10	2	1A8406-63310	SEATBELT ASSY,RETRAC	1							
11	2	1A8406-63340	COLLAR, SEATBELT	1							
12	2	22137-100000	WASHER, 10	5							
13	2	26156-100252	BOLT, M10X 25 PLATED	2							
14	2	26696-100002	NUT, LOCK M10	2							
15	1	1A8406-63110	PLATE, SEAT MOUNT	1							
16	1	26106-080162	BOLT, M8X 16 PLATED	8							

N:Old $\overset{\text{Yes}}{\underset{\text{No}}{\leftrightarrows}}$ New, Q:Old $\overset{\text{No}}{\underset{\text{Yes}}{\leftrightarrows}}$ New, R:Old $\overset{\text{Yes}}{\underset{\text{Yes}}{\leftrightarrows}}$ New, S:Old $\overset{\text{No}}{\underset{\text{No}}{\leftrightarrows}}$ New, W:Add, Z:Discontinued, F:Interchangeable by set, K:Q'ty Change

Copyright (C) 2017 YANMAR GLOBAL CS CO., LTD. All RightsReserved.

Fig.228. ANTENNA

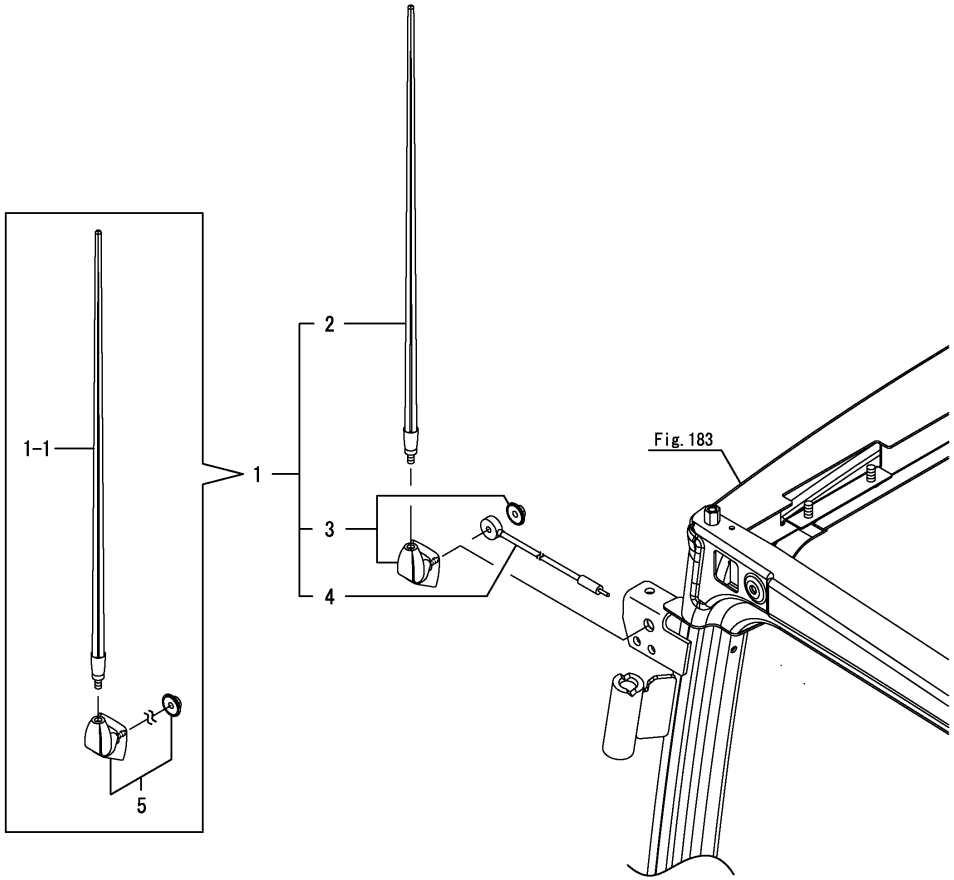

(A)=YT235Y, EU
(B)=
(C)=
(D)=
(E)=
(F)=

No.	Lev.	Parts No.	Description	Q'ty (A)	(B)	(C)	(D)	(E)	(F)	I	R
1	1	1A8060-86300	ANTENNA ASSY	1							
1-1	1	1A8060-86310	ANTENNA	1						S	
	(A=*2018.10.)										
2	2	1A8060-86310	ANTENNA	1						Z	
	(A=*2018.10.)										
3	2	1A8060-86350	BASE ASSY, ANTENNA	1						Z	
	(A=*2018.10.)										
4	2	198463-86790	WIRE, LEAD	1						Z	
	(A=*2018.10.)										
5	1	1A8060-86350	BASE ASSY, ANTENNA	1						W	
	(A=*2018.10.)										

N:Old $\xleftrightarrow[\text{No}]{\text{Yes}}$ New, Q:Old $\xleftrightarrow[\text{Yes}]{\text{No}}$ New, R:Old $\xleftrightarrow[\text{Yes}]{\text{Yes}}$ New, S:Old $\xleftrightarrow[\text{No}]{\text{No}}$ New, W:Add, Z:Discontinued, F:Interchangeable by set, K:Q'ty Change

Copyright (C) 2017 YANMAR GLOBAL CS CO., LTD. All RightsReserved.

Fig.229. CONTROL KIT

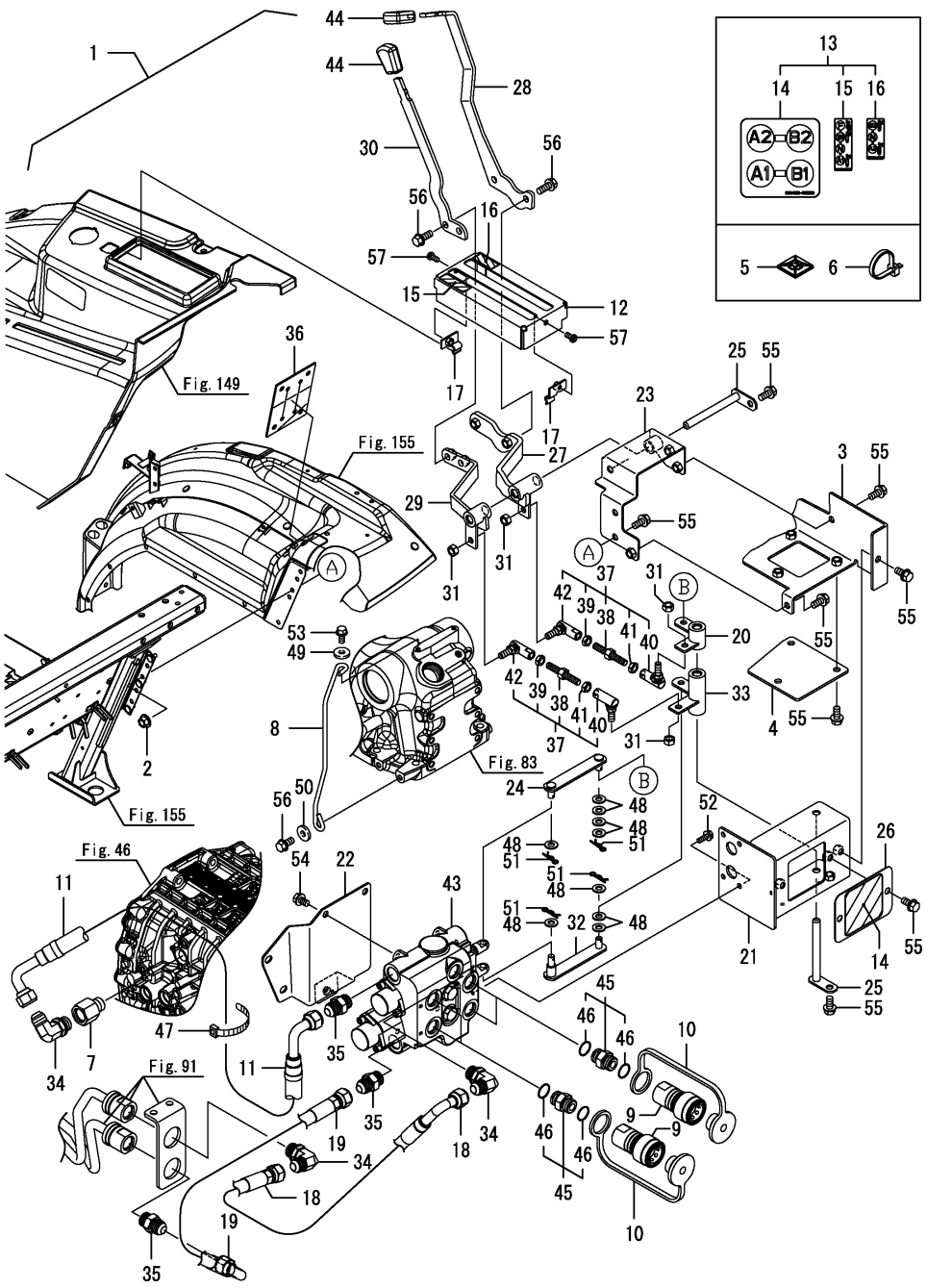

(A)=YT235Y, EU
(B)=
(C)=
(D)=
(E)=
(F)=

No.	Lev.	Parts No.	Description	Q'ty (A)	(B)	(C)	(D)	(E)	(F)	I	R
1	1	1A8425-99370	CONTROL KIT, YEU RR	1							
2	2	194990-22140	NUT, M8	2							
3	2	1A8425-46030	PLATE, COVER	1							
4	2	1A8425-46040	PLATE, REMOVEABLE	1							
5	2	1A8425-46130	MOUNT, ADHESIVE	3							
6	2	1A8425-46140	TIE, CABLE	3							
7	2	1A8425-46210	FITTING	1							
8	2	1A8425-46240	GUIDE, HOSE	1							
9	2	1A8265-46250	COUPLER,QUICK 1/2F	4							
10	2	1A8265-46270	PLUG, DUST	4							
11	2	1A8425-46291	HOSE, RR YEU TANK	1							
12	2	1A8425-46320	BODY, BOX YEU	1							
13	2	1A8425-46340	LABEL KIT	1							
14	3	1A8425-46350	LABEL, VALVE	1							
15	3	1A8425-46360	LABEL, LEVER LH	1							
16	3	1A8425-46370	LABEL, LEVER RH	1							
17	2	1A8425-46380	BRACKET ASSY	2							
18	2	1A8425-46440	HOSE, RR B	1							
19	2	1A8425-46450	HOSE, RR C	1							
20	2	1A8425-46490	LINK ASSY, LEVER A	1							
21	2	1A8425-46520	BRACKET ASSY, LEVER	1							
22	2	1A8425-46560	BRACKET, VALVE	1							
23	2	1A8425-46570	STAY ASSY, LEVER	1							
24	2	1A8425-46650	PLATE, LINK A	1							
25	2	1A8425-46670	PIN ASSY, LINK	2							
26	2	1A8425-46690	PLATE	1							
27	2	1A8425-46700	ARM ASSY, LEVER A	1							
28	2	1A8425-46721	LEVER, SCV A	1							
29	2	1A8425-46750	ARM ASSY, LEVER B	1							
30	2	1A8425-46770	LEVER, SCV B	1							
31	2	1A8425-46810	NUT, HEXAGON	4							
32	2	1A8425-46850	PLATE, LINK B	1							
33	2	1A8425-46900	LINK ASSY, LEVER B	1							
34	2	1A8160-46910	ELBOW, 8-8	3							
35	2	1A8160-46960	CONNECTOR, 8-8	3							
36	2	1A8425-46980	SEAL,REAR REMOTE	1							
37	2	1A8425-47020	TURNBUCKLE ASSY	2							
38	3	1A8425-46070	TURNBUCKLE	2							
39	3	1A8425-46080	NUT, JAM R	2							
40	3	1A8425-46090	END, ROD L	2							
41	3	1A8425-47400	NUT, JAM L	2							
42	3	1A8425-47420	END, ROD R	2							
43	2	1A8330-47700	SCV ASSY	1							
44	2	194273-47910	KNOB, CHANGE LEVER	2							
45	2	1A8250-48280	JOINT/HYD, 3/4-16UNF	4							
46	3	194464-45930	O-RING, 8-1	8							
47	2	1A8300-51210	BAND, REPEAT	1							
48	2	22137-080000	WASHER, 8	9							
49	2	22157-060000	WASHER, 6	1							
50	2	22157-080000	WASHER, 8	1							
51	2	22372-080000	PIN, SNAP 8	4							

N:Old $\overset{\text{Yes}}{\underset{\text{No}}{\leftrightarrow}}$ New, Q:Old $\overset{\text{No}}{\underset{\text{Yes}}{\leftrightarrow}}$ New, R:Old $\overset{\text{Yes}}{\underset{\text{Yes}}{\leftrightarrow}}$ New, S:Old $\overset{\text{No}}{\underset{\text{No}}{\leftrightarrow}}$ New, W:Add, Z:Discontinued, F:Interchangeable by set, K:Q'ty Change

++ CONTINUE ++

Copyright (C) 2017 YANMAR GLOBAL CS CO., LTD. All RightsReserved.

Fig.229. CONTROL KIT

(A)=YT235Y, EU
(B)=
(C)=
(D)=
(E)=
(F)=

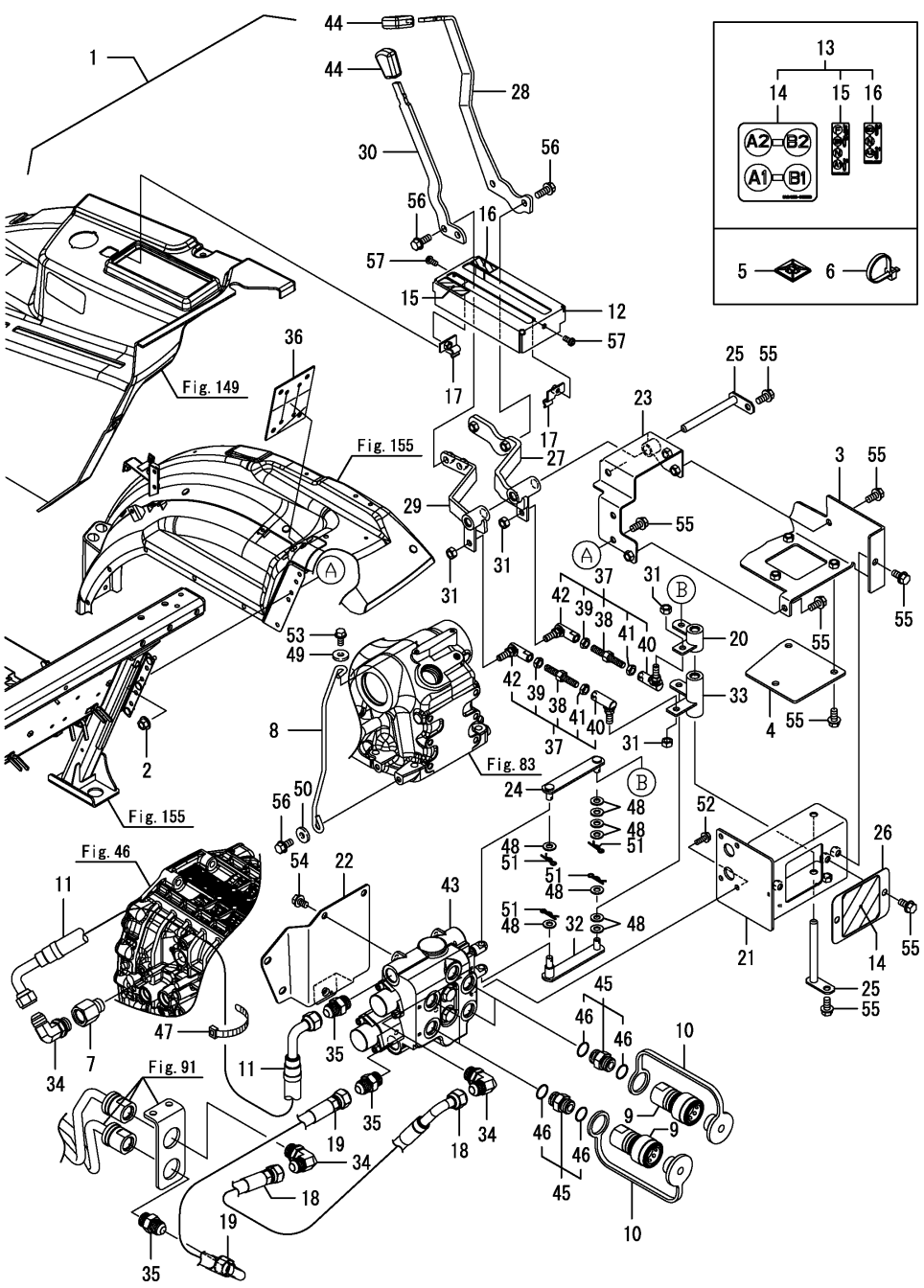

No.	Lev.	Parts No.	Description	Q'ty (A)	(B)	(C)	(D)	(E)	(F)	I	R
52	2	26106-060162	BOLT, M6X 16 PLATED	4							
53	2	26106-060202	BOLT, M6X 20 PLATED	1							
54	2	26106-080122	BOLT, M8X 12 PLATED	3							
55	2	26106-080162	BOLT, M8X 16 PLATED	12							
56	2	26106-080202	BOLT, M8X 20 PLATED	5							
57	2	26557-060122	SCREW, M6X12	2							

N:Old $\frac{\text{Yes}}{\text{No}}$ New, Q:Old $\frac{\text{No}}{\text{Yes}}$ New, R:Old $\frac{\text{Yes}}{\text{Yes}}$ New, S:Old $\frac{\text{No}}{\text{No}}$ New, W:Add, Z:Discontinued, F:Interchangeable by set, K:Q'ty Change

Copyright (C) 2017 YANMAR GLOBAL CS CO., LTD. All RightsReserved.

Fig.230. SAFETY VALVE KIT

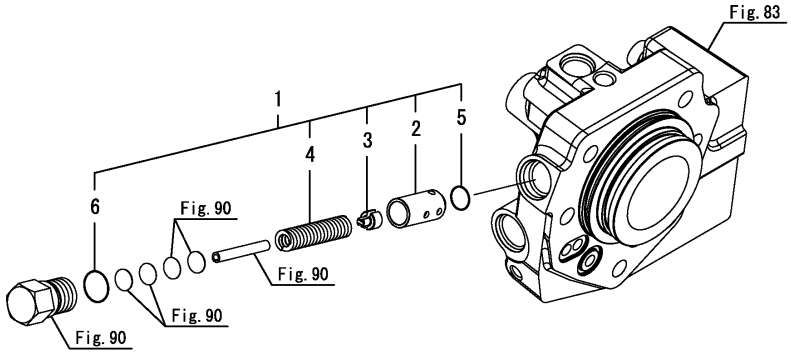

(A)=YT235Y, EU
(B)=
(C)=
(D)=
(E)=
(F)=

No.	Lev.	Parts No.	Description	Q'ty (A)	(B)	(C)	(D)	(E)	(F)	I	R
1	1	1A8400-46400	VALVE KIT, SAFETY	1							
2	2	1A8060-46411	SEAT, VALVE	1							
3	2	1A8060-46420	VALVE, POPPET	1							
4	2	1A8060-46441	SPRING, VALVE	1							
5	2	24315-000150	O-RING, 1BP15.0	1							
6	2	24315-000200	O-RING, 1BP20.0	1							

N:Old $\xleftrightarrow[\text{No}]{\text{Yes}}$ New, Q:Old $\xleftrightarrow[\text{Yes}]{\text{No}}$ New, R:Old $\xleftrightarrow[\text{Yes}]{\text{Yes}}$ New, S:Old $\xleftrightarrow[\text{No}]{\text{No}}$ New, W:Add, Z:Discontinued, F:Interchangeable by set, K:Q'ty Change

Copyright (C) 2017 YANMAR GLOBAL CS CO., LTD. All RightsReserved.

Fig.234. P.T.O. KIT(FRONT 3P)(1)

(A)=YT235Y, EU
(B)=
(C)=
(D)=
(E)=
(F)=

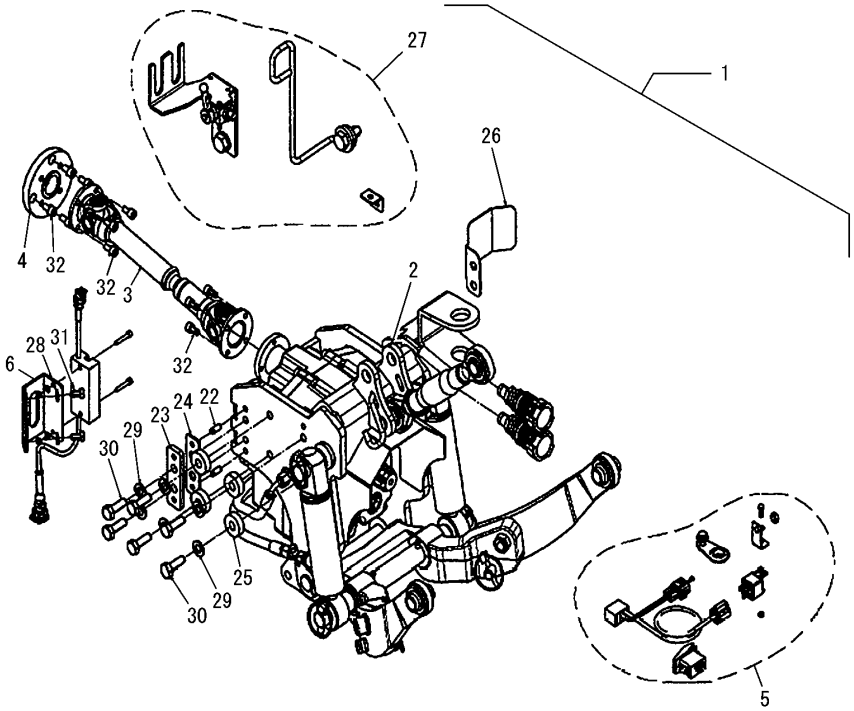

No.	Lev.	Parts No.	Description	Q'ty (A)	(B)	(C)	(D)	(E)	(F)	I	R
1	1	1A8406-07000	PTO KIT, FRONT 3P	1							
2	2	1A8406-07010	PTO ASSY, FRONT	1							1
3	2	1A8406-07400	SHAFT ASSY, JOINT	1							
4	2	1A8476-07410	FLANGE	1							
5	2	1A8406-07500	CONTROLLER ASSY, PTO	1							2
6	2	1A8406-07560	BRACKET, CONTROLLER	1							
7	2	1A8330-07740	SEAL KIT, PTO	1							4
8	3	1A8330-07750	GASKET	1							4
9	3	1A8330-07760	SEAL, OIL 35X45X7	1							4
10	3	1A8330-07770	SEAL, OIL 25X35X7	1							4
11	3	1A8330-07780	O-RING, 8X2	1							4
12	3	1A8330-07790	O-RING, 10X2	1							4
13	3	1A8330-07800	O-RING, 4.48X1.78	2							4
14	3	1A8330-07810	SEAL, RING	2							4
15	3	1A8330-07820	O-RING, 80X2.5	1							4
16	3	1A8330-07830	O-RING, 70X2	1							4
17	3	1A8330-07840	O-RING, 70X2.5	1							4
18	3	1A8330-07850	O-RING, 030X2.5	1							4
19	3	1A8330-07860	O-RING, 25X2	1							4
20	3	1A8330-07870	O-RING, 85X4	1							4
21	3	1A8330-07880	O-RING, 10X1.5	1							4
22	2	1A8476-08180	PIN, SPRING 8X20	4							
23	2	1A8406-08750	SPACER, 2X M12 8MM	2							
24	2	1A8406-08760	SPACER, 2X M12 3MM	2							
25	2	1A8406-08770	BUSH, D35 D13 L11	6							
26	2	1A8406-08780	GUARD, EXHAUST	1							
27	2	1A8406-08920	HYDRAULIC KIT	1							3
28	2	22137-080001	WASHER, 8	2							
29	2	22137-120001	WASHER, 12	10							
30	2	26076-120352	BOLT, 10.912X 35	10							
31	2	26116-080162	BOLT, M8X 16 PLATED	2							
32	2	26455-080162	BOLT, M8X16	12							

Remarks
(1)Inner parts are shown in Fig.235.
(2)Inner parts are shown in Fig.237.
(3)Inner parts are shown in Fig.238.
(4)Not illustrated.

N:Old ←Yes/No→ New, Q:Old ←No/Yes→ New, R:Old ←Yes/Yes→ New, S:Old ←No/No→ New, W:Add, Z:Discontinued, F:Interchangeable by set, K:Q'ty Change

Copyright (C) 2017 YANMAR GLOBAL CS CO., LTD. All RightsReserved.

Fig.235. P.T.O. KIT(FRONT 3P)(2)

(A)=YT235Y, EU
(B)=
(C)=
(D)=
(E)=
(F)=

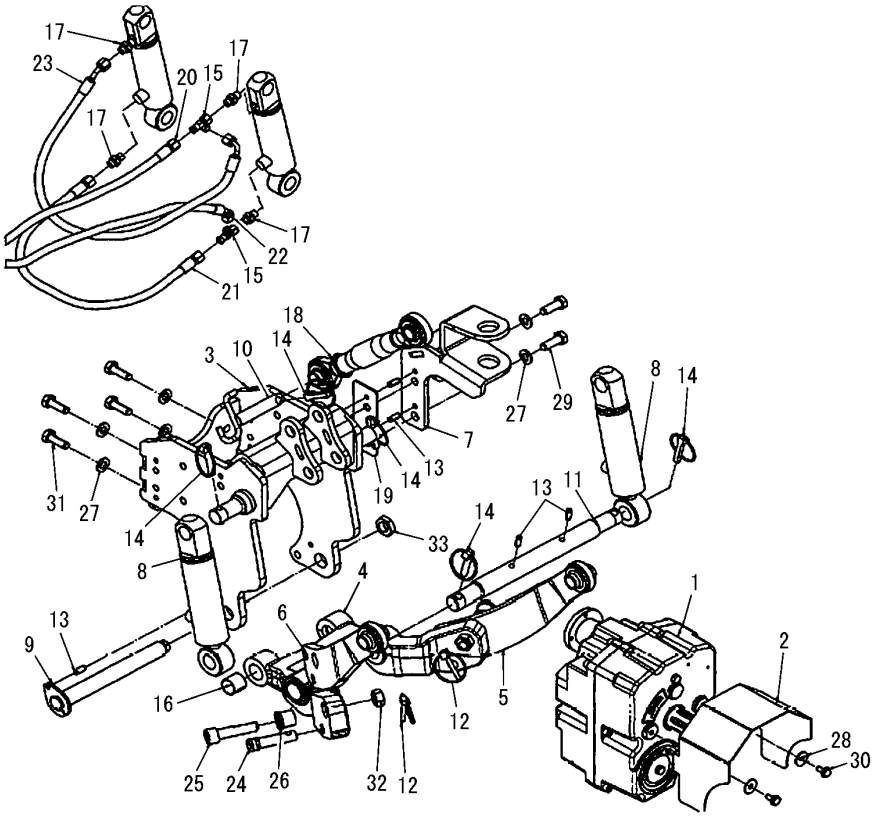

No.	Lev.	Parts No.	Description	Q'ty (A)	(B)	(C)	(D)	(E)	(F)	I	R
1	3	1A8406-07300	CASE ASSY, PTO	1							1
2	3	1A8406-07900	GUARD, PTO	1							
3	3	1A8406-08010	MOUNT ASSY, FRAME	1							
4	3	1A8406-08020	FRAME, LIFT	1							
5	3	1A8406-08030	ARM, LIFT L	1							
6	3	1A8406-08040	ARM, LIFT R	1							
7	3	1A8406-08050	HOOK, TOWING	1							
8	3	1A8406-08060	CYLINDER ASSY	2							
9	3	1A8406-08080	SHAFT, PIVOT	1							
10	3	1A8330-08090	PIN, PIVOT CAT01	1							
11	3	1A8406-08090	SHAFT, CYLINDER	1							
12	3	1A8476-08160	CLIP, LOCKING 06	2							
13	3	1A8476-08180	PIN, SPRING 8X20	5							
14	3	1A8476-08190	CLIP, LOCKING 10	5							
15	3	1A8330-08360	JOINT, T EVL 8 L	2							
16	3	1A8330-08690	BUSH, PAP 2525 P10	2							
17	3	1A8330-08700	JOINT, 8LM12	4							
18	3	1A8406-08740	LINK, TOP CAT0 270-	1							
19	3	1A8406-08790	SPACER, TOWHOOK 3MM	1							
20	3	1A8406-08830	HOSE, 06 NR08 1760	1							
21	3	1A8406-08840	HOSE, 06 NR08 680	1							
22	3	1A8406-08850	HOSE, 06 NR08 910	1							
23	3	1A8406-08860	HOSE, 06 NR26 780	1							
24	3	1A8406-08870	PIN, LOCKING CAT 0 1	2							
25	3	1A8406-08880	SCREW, SOCKET M16X65	2							
26	3	1A8406-08890	BUSH, LIFTING ARM	2							
27	3	22137-120001	WASHER, 12	6							
28	3	22157-080000	WASHER, 8	2							
29	3	26076-120352	BOLT, 10.912X 35	2							
30	3	26106-080162	BOLT, M8X 16 PLATED	2							
31	3	26116-120352	BOLT, M12X 35 PLATED	4							
32	3	26716-160002	NUT, M16	2							
33	3	26756-200002	NUT, LOCK M20	1							

Remarks
* This figure is incorporated in Fig.234 No.2.
(1)Inner parts are shown in Fig.236.

N:Old $\xleftarrow[\text{No}]{\text{Yes}}$ New, Q:Old $\xleftarrow[\text{Yes}]{\text{No}}$ New, R:Old $\xleftarrow[\text{Yes}]{\text{Yes}}$ New, S:Old $\xleftarrow[\text{No}]{\text{No}}$ New, W:Add, Z:Discontinued, F:Interchangeable by set, K:Q'ty Change

Copyright (C) 2017 YANMAR GLOBAL CS CO., LTD. All RightsReserved.

Fig.236. P.T.O. KIT(FRONT 3P)(3)

(A)=YT235Y, EU
(B)=
(C)=
(D)=
(E)=
(F)=

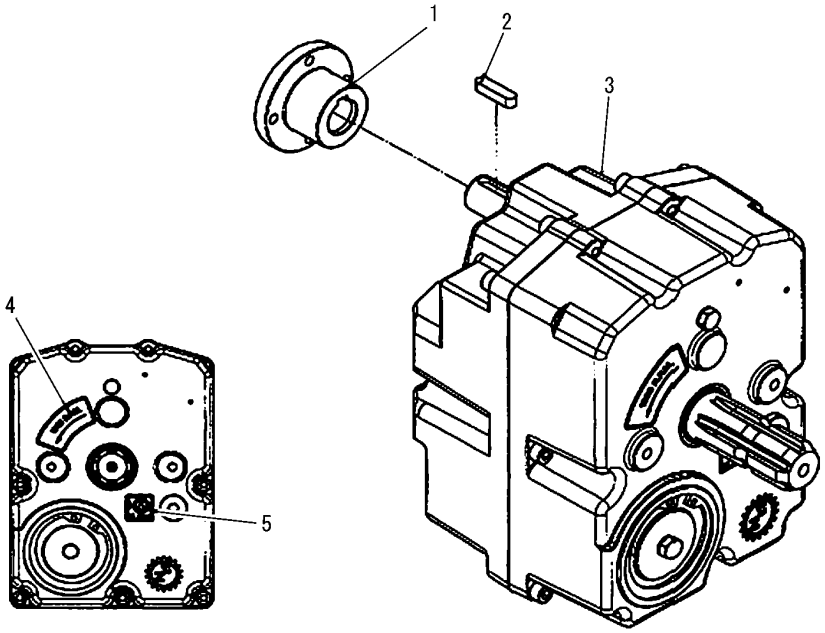

No.	Lev.	Parts No.	Description	Q'ty (A)	(B)	(C)	(D)	(E)	(F)	I	R
1	4	1A8406-07110	FLANGE	1							
2	4	1A8406-07120	KEY, PARALLEL	1							
3	4	1A8406-07310	CASE ASSY, GEAR	1							
4	4	1A8406-07350	LABEL, ROTATION	1							
5	4	1A8406-07360	LABEL, OIL LEVEL	1							

Remarks
* This figure is incorporated in Fig.235 No.1.

N:Old $\frac{\text{Yes}}{\text{No}}$ New, Q:Old $\frac{\text{No}}{\text{Yes}}$ New, R:Old $\frac{\text{Yes}}{\text{Yes}}$ New, S:Old $\frac{\text{No}}{\text{No}}$ New, W:Add, Z:Discontinued, F:Interchangeable by set, K:Q'ty Change

Copyright (C) 2017 YANMAR GLOBAL CS CO., LTD. All RightsReserved.

Fig.237. P.T.O. KIT(FRONT 3P)(4)

(A)=YT235Y, EU
(B)=
(C)=
(D)=
(E)=
(F)=

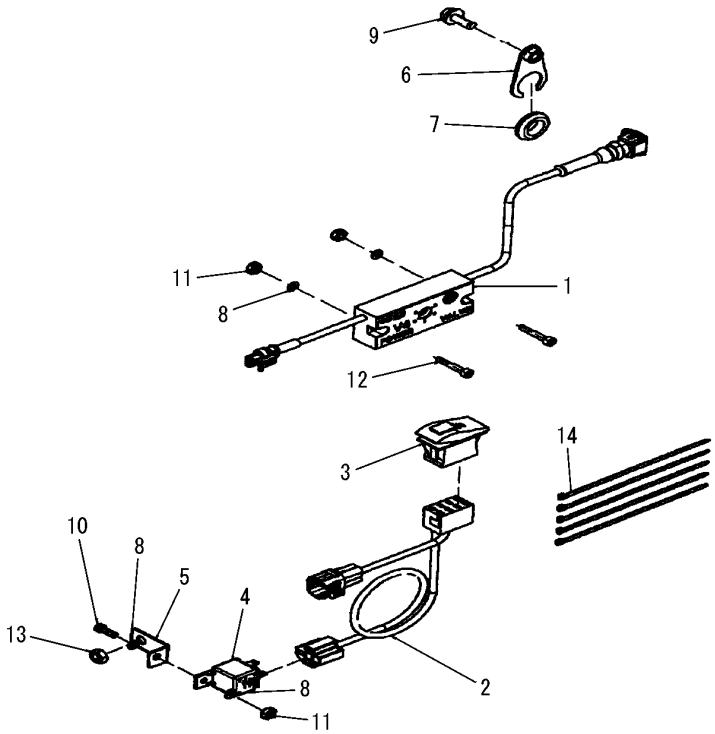

No.	Lev.	Parts No.	Description	Q'ty (A)	(B)	(C)	(D)	(E)	(F)	I	R
1	3	1A8330-07510	CONTROLLER, PTO	1							
2	3	1A8406-07520	CABLE ASSY, PTO	1							
3	3	1A8330-07530	SWITCH, PTO	1							
4	3	1A8330-07550	RELAY, CHANGEOVER	1							
5	3	1A8406-07570	BRACKET, RELAY	1							
6	3	1A8406-07580	BRACKET, CABLE	1							
7	3	1A8406-07590	GROMMET, 025	1							
8	3	22137-050001	WASHER, 5	4							
9	3	26106-080202	BOLT, M8X 20 PLATED	1							
10	3	26116-050162	BOLT, M5X 16 PLATED	1							
11	3	26346-050002	NUT, M5	3							
12	3	26455-050302	BOLT, 5 X 30	2							
13	3	26716-080002	NUT, M8	1							
14	3	29621-150001	BAND, TR150	5							

Remarks
* This figure is incorporated in Fig.234 No.5.

N:Old $\overset{\text{Yes}}{\underset{\text{No}}{\leftrightarrow}}$ New, Q:Old $\overset{\text{No}}{\underset{\text{Yes}}{\leftrightarrow}}$ New, R:Old $\overset{\text{Yes}}{\underset{\text{Yes}}{\leftrightarrow}}$ New, S:Old $\overset{\text{No}}{\underset{\text{No}}{\leftrightarrow}}$ New, W:Add, Z:Discontinued, F:Interchangeable by set, K:Q'ty Change

Copyright (C) 2017 YANMAR GLOBAL CS CO., LTD. All RightsReserved.

Fig.238. P.T.O. KIT(FRONT 3P)(5)

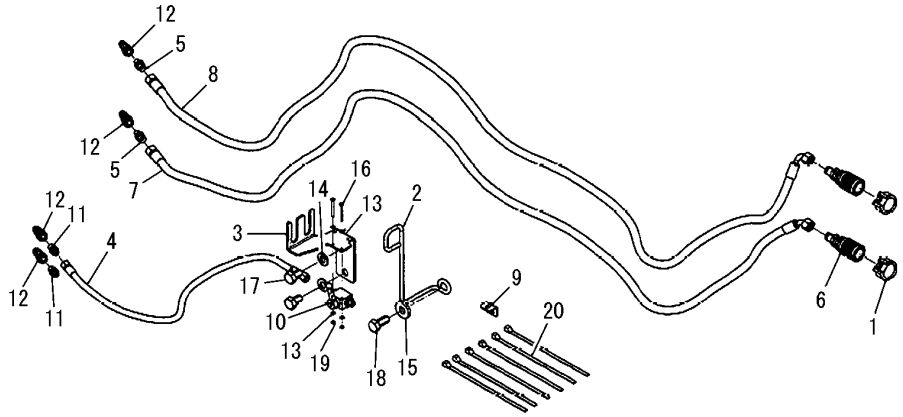

(A)=YT235Y, EU (D)=
(B)= (E)=
(C)= (F)=

No.	Lev.	Parts No.	Description	Q'ty (A)	(B)	(C)	(D)	(E)	(F)	I	R
1	3	1A8330-08650	CAP, DUST QC YELLOW	2							
2	3	1A8406-08710	GUIDE, HOSE STEEL 08	1							
3	3	1A8406-08720	BRACKET, BALL VALVE	1							
4	3	1A8406-08730	HOSE, 06 NR08 790	1							
5	3	1A8330-08780	JOINT, 12LR1/4	2							
6	3	1A8330-08790	COUPLER, QUICK 12L	2							
7	3	1A8406-08800	HOSE, 10 NR02 2130	1							
8	3	1A8406-08810	HOSE, 10 NR02 2200	1							
9	3	1A8406-08820	BRACKET, BND HOSE	1							
10	3	1A8330-08840	VALVE, BALL 8L	1							
11	3	1A8330-08870	JOINT, 8LR1/4	2							
12	3	1A8330-08880	COUPLER ASSY, QUICK	4							
13	3	22137-040000	WASHER, 4	4							
14	3	22137-160000	WASHER, 16	2							
15	3	22157-160000	WASHER, 16	1							
16	3	26116-040402	BOLT, 4 X 40	2							
17	3	26116-160252	BOLT, M16X 25 PLATED	2							
18	3	26116-160352	BOLT, M16X 35 PLATED	1							
19	3	26716-040002	NUT, M4	2							
20	3	29621-300000	BAND, TR300	6							

Remarks
* This figure is incorporated in Fig.234 No.27.

N:Old $\xleftrightarrow[\text{No}]{\text{Yes}}$ New, Q:Old $\xleftrightarrow[\text{Yes}]{\text{No}}$ New, R:Old $\xleftrightarrow[\text{Yes}]{\text{Yes}}$ New, S:Old $\xleftrightarrow[\text{No}]{\text{No}}$ New, W:Add, Z:Discontinued, F:Interchangeable by set, K:Q'ty Change

Copyright (C) 2017 YANMAR GLOBAL CS CO., LTD. All RightsReserved.

Fig.239. HITCH KIT(FRONT 3P)(1)

(A)=YT235Y, EU
(B)=
(C)=
(D)=
(E)=
(F)=

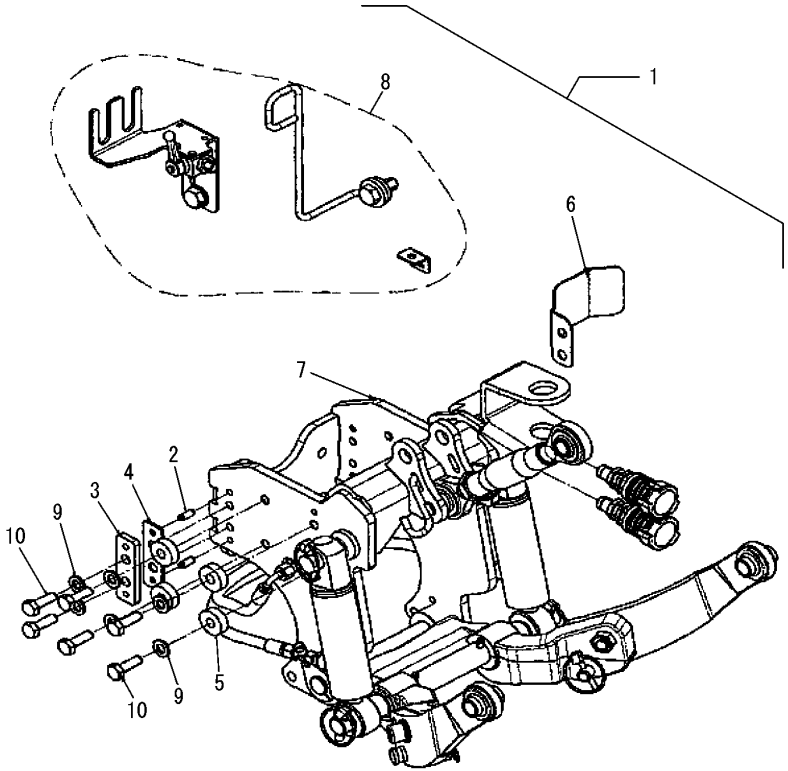

No.	Lev.	Parts No.	Description	Q'ty (A)	(B)	(C)	(D)	(E)	(F)	I	R
1	1	1A8406-08000	HITCH KIT, FRONT 3P	1							
2	2	1A8476-08180	PIN, SPRING 8X20	4							
3	2	1A8406-08750	SPACER, 2X M12 8MM	2							
4	2	1A8406-08760	SPACER, 2X M12 3MM	2							
5	2	1A8406-08770	BUSH, D35 D13 L11	6							
6	2	1A8406-08780	GUARD, EXHAUST	1							
7	2	1A8406-08910	LINK, U GMS2 6KN	1							1
8	2	1A8406-08920	HYDRAULIC KIT	1							2
9	2	22137-120000	WASHER, 12	10							
10	2	26076-120352	BOLT, 10.912X 35	10							

Remarks
(1)Inner parts are shown in Fig.240.
(2)Inner parts are shown in Fig.241.

N:Old $\frac{\text{Yes}}{\text{No}}$ New, Q:Old $\frac{\text{No}}{\text{Yes}}$ New, R:Old $\frac{\text{Yes}}{\text{Yes}}$ New, S:Old $\frac{\text{No}}{\text{No}}$ New, W:Add, Z:Discontinued, F:Interchangeable by set, K:Q'ty Change

Copyright (C) 2017 YANMAR GLOBAL CS CO., LTD. All RightsReserved.

Fig.240. HITCH KIT(FRONT 3P)(2)

(A)=YT235Y, EU
(B)=
(C)=
(D)=
(E)=
(F)=

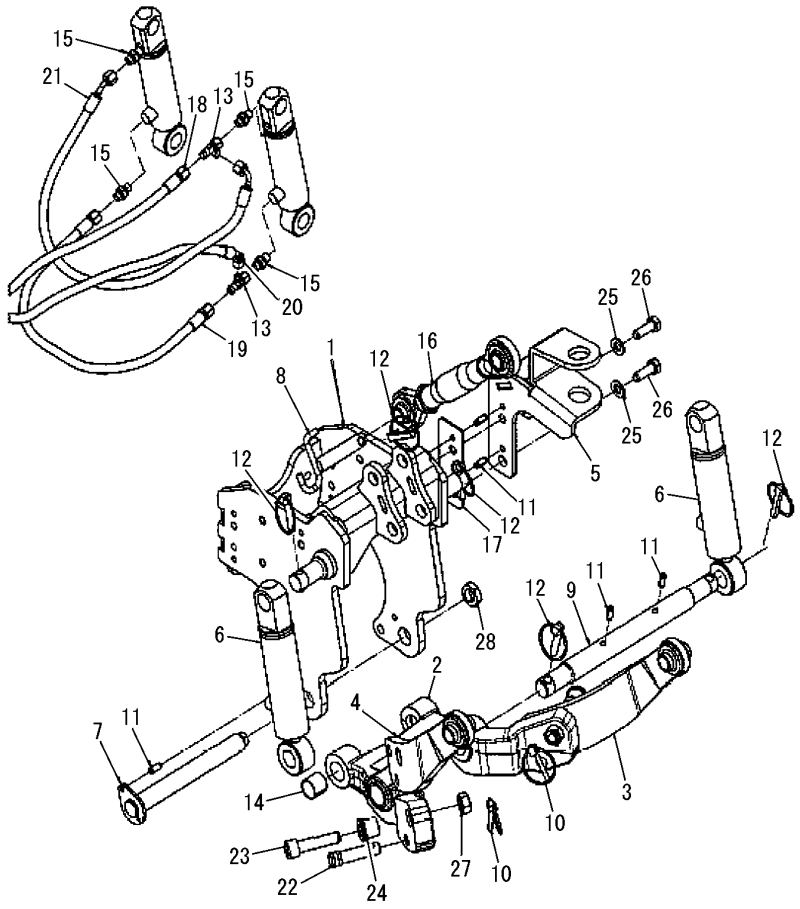

No.	Lev.	Parts No.	Description	Q'ty (A)	(B)	(C)	(D)	(E)	(F)	I	R
1	3	1A8406-08010	MOUNT ASSY, FRAME	1							
2	3	1A8406-08020	FRAME, LIFT	1							
3	3	1A8406-08030	ARM, LIFT L	1							
4	3	1A8406-08040	ARM, LIFT R	1							
5	3	1A8406-08050	HOOK, TOWING	1							
6	3	1A8406-08060	CYLINDER ASSY	2							
7	3	1A8406-08080	SHAFT, PIVOT	1							
8	3	1A8330-08090	PIN, PIVOT CAT01	1							
9	3	1A8406-08090	SHAFT, CYLINDER	1							
10	3	1A8476-08160	CLIP, LOCKING 06	2							
11	3	1A8476-08180	PIN, SPRING 8X20	5							
12	3	1A8476-08190	CLIP, LOCKING 10	5							
13	3	1A8330-08360	JOINT, T EVL 8 L	2							
14	3	1A8330-08690	BUSH, PAP 2525 P10	2							
15	3	1A8330-08700	JOINT, 8LM12	4							
16	3	1A8406-08740	LINK, TOP CAT0 270-	1							
17	3	1A8406-08790	SPACER, TOWHOOK 3MM	1							
18	3	1A8406-08830	HOSE, 06 NR08 1760	1							
19	3	1A8406-08840	HOSE, 06 NR08 680	1							
20	3	1A8406-08850	HOSE, 06 NR08 910	1							
21	3	1A8406-08860	HOSE, 06 NR26 780	1							
22	3	1A8406-08870	PIN, LOCKING CAT 0 1	2							
23	3	1A8406-08880	SCREW, SOCKET M16X65	2							
24	3	1A8406-08890	BUSH, LIFTING ARM	2							
25	3	22137-120000	WASHER, 12	2							
26	3	26076-120352	BOLT, 10.912X 35	2							
27	3	26716-160002	NUT, M16	2							
28	3	26756-200002	NUT, LOCK M20	1							

Remarks
* This figure is incorporated in Fig.239 No.7.

N:Old $\xleftrightarrow[\text{No}]{\text{Yes}}$ New, Q:Old $\xleftrightarrow[\text{Yes}]{\text{No}}$ New, R:Old $\xleftrightarrow[\text{Yes}]{\text{Yes}}$ New, S:Old $\xleftrightarrow[\text{No}]{\text{No}}$ New, W:Add, Z:Discontinued, F:Interchangeable by set, K:Q'ty Change

Copyright (C) 2017 YANMAR GLOBAL CS CO., LTD. All RightsReserved.

Fig.241. HITCH KIT(FRONT 3P)(3)

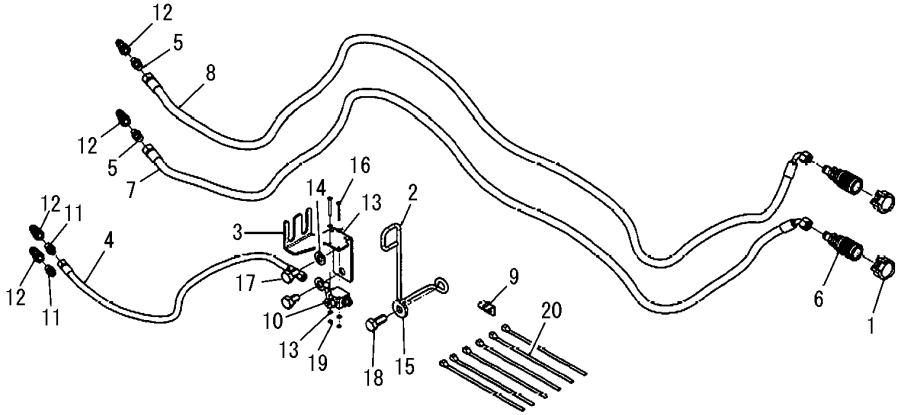

(A)=YT235Y, EU (D)=
(B)= (E)=
(C)= (F)=

No.	Lev.	Parts No.	Description	Q'ty (A)	(B)	(C)	(D)	(E)	(F)	I	R
1	3	1A8330-08650	CAP, DUST QC YELLOW	2							
2	3	1A8406-08710	GUIDE, HOSE STEEL 08	1							
3	3	1A8406-08720	BRACKET, BALL VALVE	1							
4	3	1A8406-08730	HOSE, 06 NR08 790	1							
5	3	1A8330-08780	JOINT, 12LR1/4	2							
6	3	1A8330-08790	COUPLER, QUICK 12L	2							
7	3	1A8406-08800	HOSE, 10 NR02 2130	1							
8	3	1A8406-08810	HOSE, 10 NR02 2200	1							
9	3	1A8406-08820	BRACKET, BND HOSE	1							
10	3	1A8330-08840	VALVE, BALL 8L	1							
11	3	1A8330-08870	JOINT, 8LR1/4	2							
12	3	1A8330-08880	COUPLER ASSY, QUICK	4							
13	3	22137-040000	WASHER, 4	4							
14	3	22137-160000	WASHER, 16	2							
15	3	22157-160000	WASHER, 16	1							
16	3	26116-040402	BOLT, 4 X 40	2							
17	3	26116-160252	BOLT, M16X 25 PLATED	2							
18	3	26116-160352	BOLT, M16X 35 PLATED	1							
19	3	26716-040002	NUT, M4	2							
20	3	29621-300000	BAND, TR300	6							

Remarks
* This figure is incorporated in Fig.239 No.8.

N:Old $\overset{\text{Yes}}{\underset{\text{No}}{\leftrightarrow}}$ New, Q:Old $\overset{\text{No}}{\underset{\text{Yes}}{\leftrightarrow}}$ New, R:Old $\overset{\text{Yes}}{\underset{\text{Yes}}{\leftrightarrow}}$ New, S:Old $\overset{\text{No}}{\underset{\text{No}}{\leftrightarrow}}$ New, W:Add, Z:Discontinued, F:Interchangeable by set, K:Q'ty Change

Copyright (C) 2017 YANMAR GLOBAL CS CO., LTD. All RightsReserved.

Fig.242. DAMPER CMP(FRONT 3P)

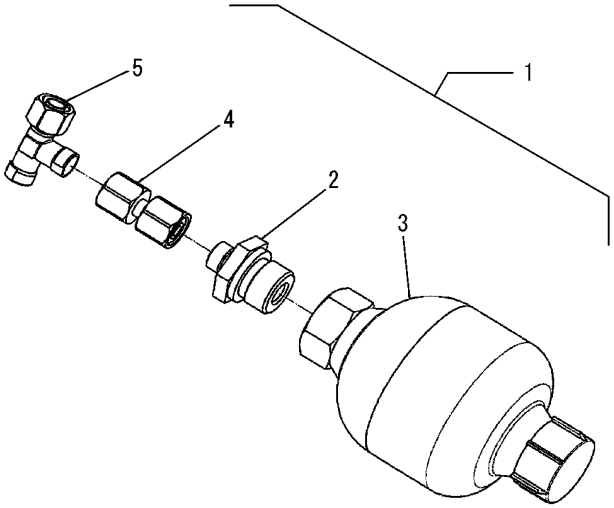

(A)=YT235Y, EU
(B)=
(C)=
(D)=
(E)=
(F)=

No.	Lev.	Parts No.	Description	Q'ty (A)	(B)	(C)	(D)	(E)	(F)	I	R
1	1	1A8406-08300	DAMPER ASSY, F-3P	1							
2	2	1A8406-08310	JOINT, 8LR1/2	1							
3	2	1A8330-08320	ACCUMULATOR ,30BAR	1							
4	2	1A8406-08320	JOINT, GVO8L8L	1							
5	2	1A8330-08360	JOINT, T EVL 8 L	1							

N:Old $\xleftrightarrow[\text{No}]{\text{Yes}}$ New, Q:Old $\xleftrightarrow[\text{Yes}]{\text{No}}$ New, R:Old $\xleftrightarrow[\text{Yes}]{\text{Yes}}$ New, S:Old $\xleftrightarrow[\text{No}]{\text{No}}$ New, W:Add, Z:Discontinued, F:Interchangeable by set, K:Q'ty Change

Copyright (C) 2017 YANMAR GLOBAL CS CO., LTD. All RightsReserved.

Fig.243. PUSH BAR KIT(FRONT 3P)

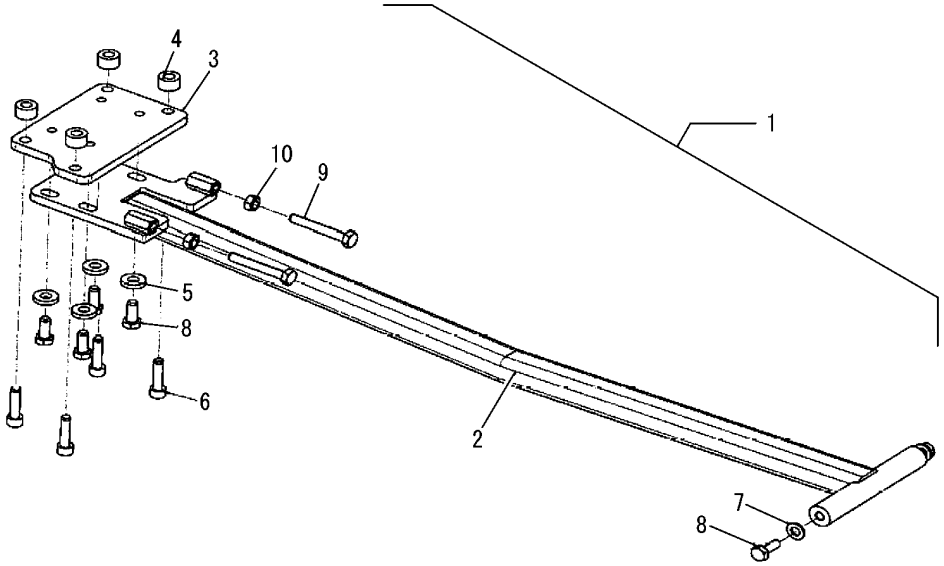

(A)=YT235Y, EU (D)=
(B)= (E)=
(C)= (F)=

No.	Lev.	Parts No.	Description	Q'ty (A)	(B)	(C)	(D)	(E)	(F)	I	R
1	1	1A8406-08500	BAR KIT, PUSH F-3P	1							
2	2	1A8406-08510	BAR, PUSH GMS2	1							
3	2	1A8406-08520	PLATE, MOUNTING GMS2	1							
4	2	1A8406-08530	BUSH, D25 D13 L16	4							
5	2	1A8406-08540	WASHER, M12 HEAVY US	4							
6	2	1A8406-08550	SCREW, SOCKET M12X45	4							
7	2	22137-120000	WASHER, 12	2							
8	2	26076-120302	BOLT, 10.912X 30	6							
9	2	26116-120804	BOLT, M12X 80 PLATED	2							
10	2	26716-120002	NUT, M12	2							

N:Old $\xleftarrow[\text{No}]{\text{Yes}}$ New, Q:Old $\xleftarrow[\text{Yes}]{\text{No}}$ New, R:Old $\xleftarrow[\text{Yes}]{\text{Yes}}$ New, S:Old $\xleftarrow[\text{No}]{\text{No}}$ New, W:Add, Z:Discontinued, F:Interchangeable by set, K:Q'ty Change

Copyright (C) 2017 YANMAR GLOBAL CS CO., LTD. All RightsReserved.

Fig.244. HOLDER KIT(FRONT 3P)

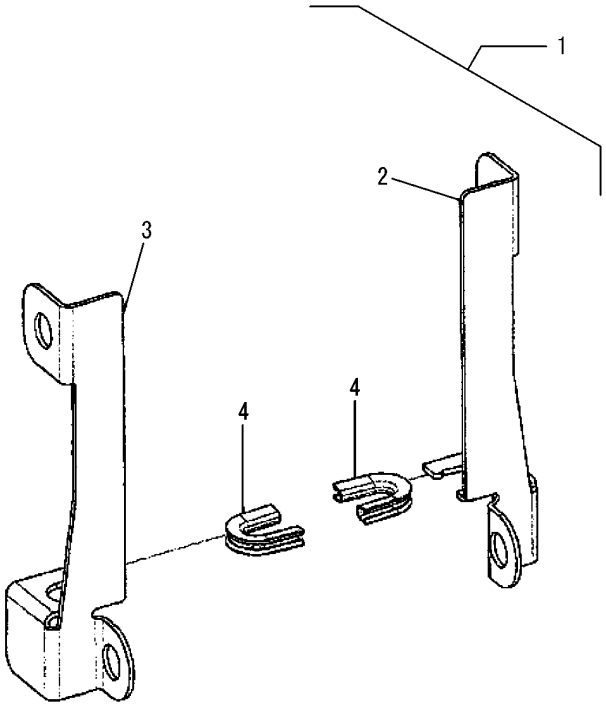

(A)=YT235Y, EU (D)=
(B)= (E)=
(C)= (F)=

No.	Lev.	Parts No.	Description	Q'ty (A)	(B)	(C)	(D)	(E)	(F)	I	R
1	1	1A8406-08600	HOLDER KIT, F-3P	1							
2	2	1A8406-08610	BRACKET, LOADER ST L	1							
3	2	1A8406-08620	BRACKET, LOADER ST R	1							
4	2	1A8406-08630	PROTECTOR, L90	2							

N:Old $\overset{\text{Yes}}{\underset{\text{No}}{\leftrightarrows}}$ New, Q:Old $\overset{\text{No}}{\underset{\text{Yes}}{\leftrightarrows}}$ New, R:Old $\overset{\text{Yes}}{\underset{\text{Yes}}{\leftrightarrows}}$ New, S:Old $\overset{\text{No}}{\underset{\text{No}}{\leftrightarrows}}$ New, W:Add, Z:Discontinued, F:Interchangeable by set, K:Q'ty Change

Copyright (C) 2017 YANMAR GLOBAL CS CO., LTD. All RightsReserved.

Fig.245. DRAWBAR HITCH

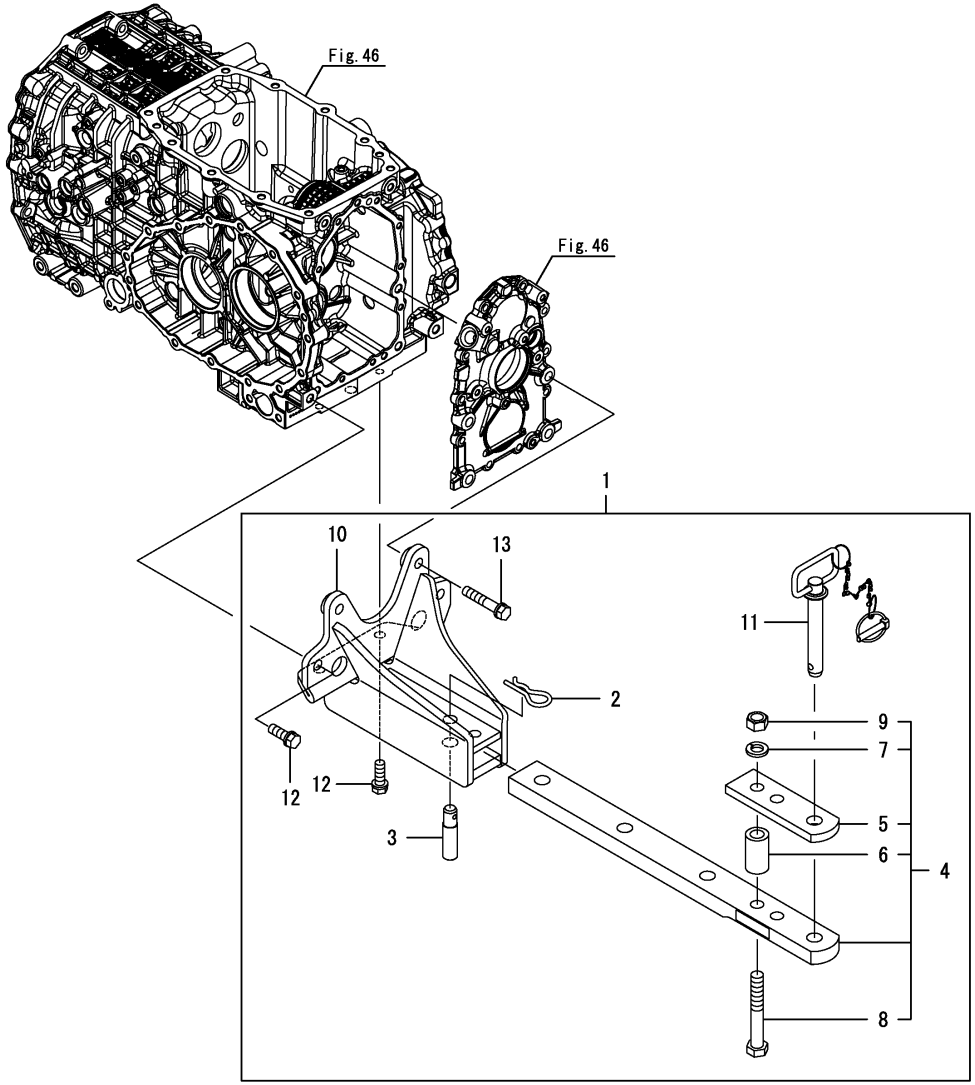

(A)=YT235Y, EU
(B)=
(C)=
(D)=
(E)=
(F)=

No.	Lev.	Parts No.	Description	Q'ty (A)	(B)	(C)	(D)	(E)	(F)	I	R
1	1	1A8406-75700	DRAWBAR KIT	1							
2	2	195230-17260	PIN, SNAP 22S	1							
3	2	198253-75430	PIN, HITCH	1							
4	2	1A8406-99700	M ASSY, DRAWBAR	1							
5	3	1A8406-75730	PLATE, CLEVIS	1							
6	3	1A8406-75740	SPACER, DRAWBAR	2							
7	3	22217-160000	WASHER, SPRING 16	2							
8	3	26116-161102	BOLT, M16X110 PLATED	2							
9	3	26716-160002	NUT, M16	2							
10	2	1A8406-75750	BRACKET ASSY,DRAWBAR	1							
11	2	1A8406-75820	PIN ASSY, DRAWBAR	1							
12	2	26013-120352	BOLT, M12X 35	4							
13	2	26013-120652	BOLT, M12X 65	2							

N:Old $\frac{\text{Yes}}{\text{No}}$ New, Q:Old $\frac{\text{No}}{\text{Yes}}$ New, R:Old $\frac{\text{Yes}}{\text{Yes}}$ New, S:Old $\frac{\text{No}}{\text{No}}$ New, W:Add, Z:Discontinued, F:Interchangeable by set, K:Q'ty Change

Copyright (C) 2017 YANMAR GLOBAL CS CO., LTD. All RightsReserved.

Fig.246. HITCH KIT(FRONT 3P)(QUICK)

(A)=YT235Y, EU
(B)=
(C)=
(D)=
(E)=
(F)=

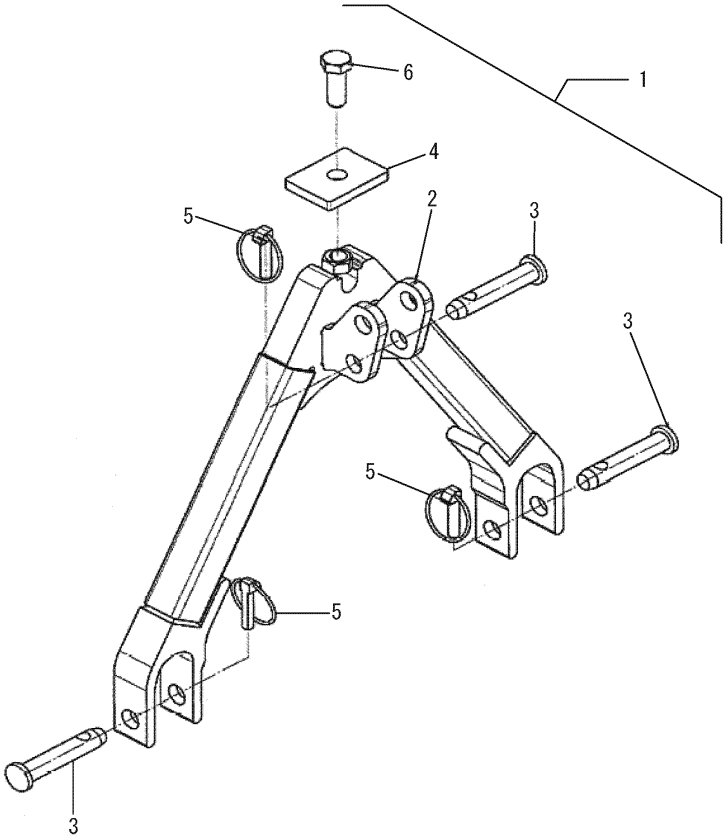

No.	Lev.	Parts No.	Description	Q'ty (A)	(B)	(C)	(D)	(E)	(F)	I	R
1	1	1A8330-08100	HITCH KIT,QUICK F-3P	1							
2	2	1A8330-08110	FRAME, A QUICK CAT0	1							
3	2	1A8330-08120	PIN, CAT 0 1	3							
4	2	1A8330-08130	PLATE, LOCKING 10MM	1							
5	2	1A8330-08140	CLIP, LOCKING 010	3							
6	2	26116-160452	BOLT, M16X 45 PLATED	1							

N:Old $\xleftrightarrow[\text{No}]{\text{Yes}}$ New, Q:Old $\xleftrightarrow[\text{Yes}]{\text{No}}$ New, R:Old $\xleftrightarrow[\text{Yes}]{\text{Yes}}$ New, S:Old $\xleftrightarrow[\text{No}]{\text{No}}$ New, W:Add, Z:Discontinued, F:Interchangeable by set, K:Q'ty Change

Copyright (C) 2017 YANMAR GLOBAL CS CO., LTD. All RightsReserved.

Fig.247. FRONT WEIGHT

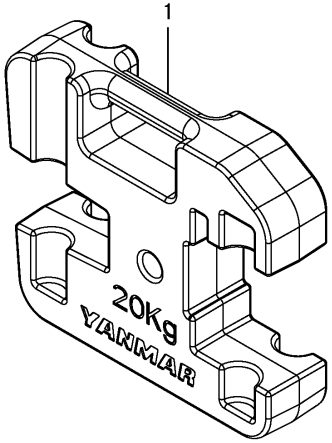

(A)=YT235Y, EU
(B)=
(C)=
(D)=
(E)=
(F)=

No.	Lev.	Parts No.	Description	Q'ty (A)	(B)	(C)	(D)	(E)	(F)	I	R
1	1	1A8476-91000	WEIGHT,FRONT 20	1							

N:Old $\xleftrightarrow[\text{No}]{\text{Yes}}$ New, Q:Old $\xleftrightarrow[\text{Yes}]{\text{No}}$ New, R:Old $\xleftrightarrow[\text{Yes}]{\text{Yes}}$ New, S:Old $\xleftrightarrow[\text{No}]{\text{No}}$ New, W:Add, Z:Discontinued, F:Interchangeable by set, K:Q'ty Change

Copyright (C) 2017 YANMAR GLOBAL CS CO., LTD. All RightsReserved.

Fig.248. BRACKET(FRONT WEIGHT)

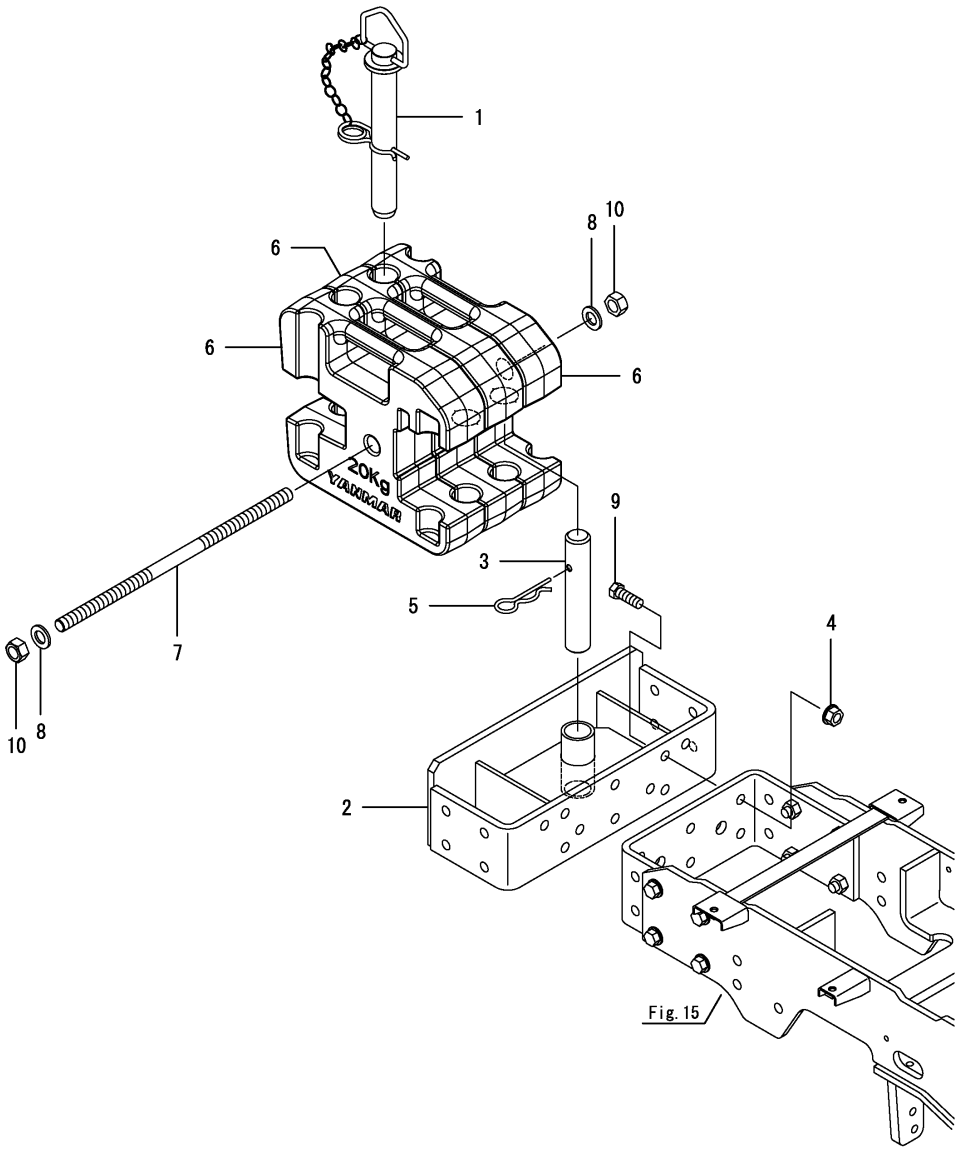

(A)=YT235Y, EU
(B)=
(C)=
(D)=
(E)=
(F)=

No.	Lev.	Parts No.	Description	Q'ty (A)	(B)	(C)	(D)	(E)	(F)	I	R
1	1	1A8476-11600	PIN ASSY	1							
2	1	1A8476-11700	BRACKET ASSY, FRONT	1							
3	1	1A8476-11790	PIN, CONNECT	1							
4	1	194990-22160	NUT, M12	6							
5	1	194080-75790	PIN, SNAP 28	1							
6	1	1A8476-91000	WEIGHT,FRONT 20	3							
7	1	1A8476-91160	BOLT,LOCK M16X390	1							
8	1	22137-160000	WASHER, 16	2							
9	1	26116-120352	BOLT, M12X 35 PLATED	6							
10	1	26716-160002	NUT, M16	2							

N:Old $\xleftarrow[\text{No}]{\text{Yes}}$ New, Q:Old $\xleftarrow[\text{Yes}]{\text{No}}$ New, R:Old $\xleftarrow[\text{Yes}]{\text{Yes}}$ New, S:Old $\xleftarrow[\text{No}]{\text{No}}$ New, W:Add, Z:Discontinued, F:Interchangeable by set, K:Q'ty Change

Copyright (C) 2017 YANMAR GLOBAL CS CO., LTD. All RightsReserved.

Fig.249. BRACKET(EXTRA WEIGHT)

(A)=YT235Y, EU
(B)=
(C)=
(D)=
(E)=
(F)=

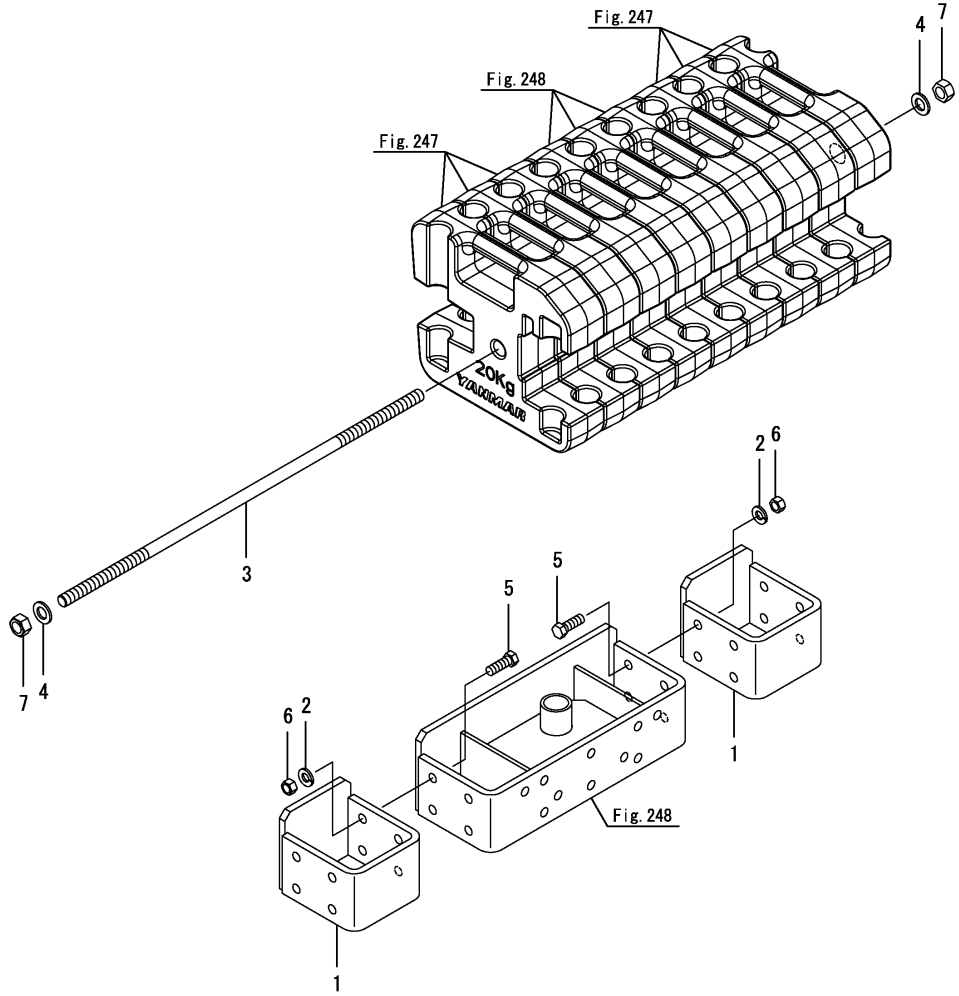

No.	Lev.	Parts No.	Description	Q'ty (A)	(B)	(C)	(D)	(E)	(F)	I	R
1	1	1A8476-11750	BRACKET ASSY, EXT	2							
2	1	194274-13580	WASHER, SPRING 12	8							
3	1	1A8476-91170	BOLT,LOCK M16X650	1							
4	1	22137-160000	WASHER, 16	2							
5	1	26116-120352	BOLT, M12X 35 PLATED	8							
6	1	26716-120002	NUT, M12	8							
7	1	26716-160002	NUT, M16	2							

N:Old ⇄(Yes/No) New, Q:Old ⇄(No/Yes) New, R:Old ⇄(Yes/Yes) New, S:Old ⇄(No/No) New, W:Add, Z:Discontinued, F:Interchangeable by set, K:Q'ty Change

Copyright (C) 2017 YANMAR GLOBAL CS CO., LTD. All RightsReserved.

Parts No. Index

Parts No.	Fig. No.	Ref. No.
0A041-EN0300	199	1
0A041-EN0301	199	1 -1
0A041-EN0302	199	1 -2
101504-55101	8	34
	9	34
	231	32
	232	33
114270-59010	2	17
	8	35
		36
		37
	9	35
		36
		37
	11	11
		12
		13
		14
		15
	12	2
	231	25
		33
		34
		35
	232	25
		34
		35
		36
119629-59910	8	39
	9	39
	231	37
	232	38
119802-13811	6	8
	7	8
124240-01883	82	1
124550-77030	101	27
	102	27
124756-77040	101	28
	102	28
129054-96990	198	7
129107-44590	2	5
129263-44510	2	14
129461-59580	8	38
	9	38
	231	36
	232	37
129917-55821	2	40
129930-13201	6	7
	7	7
129968-96970	198	6

Parts No.	Fig. No.	Ref. No.
129979-55700	2	32
129A00-55730	2	38
129A00-55740	2	39
129A00-55751	2	34
129A00-55760	2	35
129A00-91430	101	17
	102	17
129A23-55810	2	30
129A26-55601	2	28
129A26-55610	2	29
129A26-55650	2	31
129A26-59010	2	41
129A26-59060	2	42
129A26-59160	2	43
129A26-59210	2	44
129A26-59550	2	45
129C20-55720	2	37
129E00-55710	2	33
168245-00080	86	1
1682B3-00040	87	1
1682B3-00050	87	1 -1
1682B3-01130	87	2
1682B3-01310	87	3
168HQ0-87730	96	3
172122-46570	60	4
172122-46590	62	36
		42
172124-76160	38	10
172141-76920	38	13
172142-76181	38	11
	42	16
172147-70500	59	40
172148-70301	59	39
172156-72340	37	20
172175-76100	91	30
172544-16200	106	6
172638-73470	59	41
172638-73490	59	42
172730-75141	38	9
172B03-19110	194	2
172B16-17190	129	1
		2
	130	1
		2
174570-57110	111	13
	128	1
175022-49730	2	15
	95	8
177432-03450	24	1
192167-24600	83	1

Parts No.	Fig. No.	Ref. No.
194065-42250	83	14
		15
194065-46220	89	2
194065-46350	89	5
194080-75790	248	5
194130-44480	85	8
194130-47851	149	2
	151	2
194150-21910	46	1
194150-22480	81	6
	175	3
	223	6
194150-24270	189	1
194150-71230	176	10
194151-37730	81	5
194151-47760	94	7
194151-63250	189	4
194166-14800	28	3
		8
194166-14810	28	4
		9
194166-14820	28	5
		10
194167-61650	145	15
	146	15
194170-51210	8	33
	9	33
	60	7
	231	31
	232	32
194180-12471	17	13
	37	1
194180-61980	1	4
194190-26840	56	3
194197-11140	219	3
194197-25930	91	1
194197-56350	142	2
194250-25240	52	1
194250-32530	222	13
194250-46470	90	6
194250-47490	175	4
	223	7
194250-51420	101	22
	102	22
194250-61850	5	8
194273-47910	229	44
194274-13580	78	1
	201	2
	249	2
194275-51210	92	8

Parts No.	Fig. No.	Ref. No.
194279-14220	76	2
194300-33200	67	4
194310-25100	48	1
	50	3
	51	1
194310-47790	94	8
194312-27780	91	2
194322-24980	43	7
194330-62530	80	22
	182	2
194370-26350	52	7
194420-33150	67	2
194440-32580	71	1
194440-51630	147	7
194454-25770	50	4
194464-45930	229	46
194465-13650	201	3
194515-31610	64	3
194515-31850	64	6
194525-31520	64	2
194555-25870	18	3
194555-26520	56	2
194555-42280	83	16
194555-46380	89	6
194555-47340	93	12
194555-47350	93	13
194555-65130	139	29
		30
		31
194555-77910	91	31
	96	11
		18
	100	4
194556-13790	26	1
194556-42220	83	12
		13
194640-46420	90	2
194680-27540	54	3
	55	1
194680-51670	42	14
	101	19
		23
	102	19
		23
	104	3
	105	3
	196	36
194697-62560	2	20
	94	16
	152	7

Parts No. Index

Parts No.	Fig. No.	Ref. No.
194820-27370	62	34
		40
194850-32340	65	2
194850-49290	91	27
	98	12
194940-61790	122	19
	125	5
	126	2
	145	16
		17
	146	16
		17
	147	10
		11
	149	5
	196	3
194990-20170	62	33
		39
194990-22040	92	1
194990-22110	5	12
194990-22120	121	1
	123	1
	129	3
	130	3
	193	1
194990-22130	3	1
	6	9
		18
	7	9
		18
	14	13
	40	3
	41	5
	62	9
	101	1
	102	1
	106	7
	107	1
	109	1
	111	1
	117	1
	124	1
	139	1
	140	13
	142	1
	143	1
	145	1
	146	1
	148	2
	177	2

Parts No.	Fig. No.	Ref. No.
194990-22130	186	1
	217	2
	218	2
194990-22140	2	13
	3	2
	6	10
		19
	7	10
		19
	8	31
		32
	9	31
		32
	10	2
	34	6
	60	1
	62	1
		50
	77	1
	80	2
	101	2
	102	2
	106	8
	136	1
	137	1
	138	1
	139	2
	140	2
		12
	153	1
	155	1
	182	1
	192	1
	197	1
	217	3
	218	3
	220	2
	229	2
	231	29
		30
	232	30
		31
194990-22150	80	3
	208	7
		8
194990-22160	219	4
	248	4
194990-85561	92	18
195080-15060	176	1
195230-17260	245	2

Parts No.	Fig. No.	Ref. No.
195534-22820	93	1
195545-23770	62	11
195616-24930	108	1
	155	2
	196	1
197810-84840	151	33
197820-84740	186	27
198010-41211	95	1
198031-14701-1	28	1
198031-14801-1	28	6
198031-34900	72	4
		9
198031-34910	72	5
		10
198031-34920	72	6
		11
198071-24350	46	6
198071-52190	110	1
198071-58810	62	46
	94	15
	184	47
		50
198071-61890	5	15
	139	21
		22
	145	18
	146	18
	149	6
		7
	151	8
		9
		10
	152	2
	189	3
	192	2
198071-62900	157	1
198071-65610	139	37
		38
		39
198071-74970	178	4
	179	4
198072-18320	177	1
198072-27650	55	2
198072-27880	94	1
	174	1
	223	2
198072-60590	5	14
	145	3
	146	4
	147	5

Parts No.	Fig. No.	Ref. No.
198072-60590	147	8
	149	3
		4
	151	5
		6
		7
	152	1
	189	2
		26
198092-71720	177	5
198093-82510	184	21
198093-83752	186	25
198093-84810	104	20
	105	20
198094-83640	186	14
198094-86060	143	3
	221	3
198094-86560	143	4
198119-27150	54	1
198119-48310	97	1
198121-47111	149	1
	151	1
198121-48870	91	26
	96	17
	100	3
198121-63560	95	9
198127-83150	189	6
198127-86710	192	14
198127-86720	192	15
198129-27281	61	1
198129-78720	3	7
198133-34130	32	1
	76	1
198133-64400	191	2
198153-51700	101	8
	102	8
198153-83710	186	17
198153-83720	186	20
198153-86660	192	6
198153-86670	192	7
198162-52110	113	1
198162-52150	113	4
198163-52110	111	7
198163-52120	111	8
198163-52150	111	6
198165-58120	107	3
198165-62460	155	10
	187	26
198165-85970	182	10
198167-26240	50	27

Parts No. Index

Parts No.	Fig. No.	Ref. No.
198167-26240	56	1
198196-34140	71	3
198200-00610	2	2
198200-01260	5	6
198200-04020	8	1
	9	1
	231	4
	232	4
198200-04040	8	3
	9	3
	231	2
	232	2
198200-04090	8	4
	9	4
	231	5
	232	5
198200-13220	19	3
198200-13730	24	4
198200-13911	24	6
198200-14130-1	26	2
198200-14210	26	3
198200-14741-1	29	2
198200-28340	56	17
198200-31510	64	1
198200-31810	64	4
198200-31820	64	5
198200-32110	64	7
198200-32320	65	1
198200-32731-1	66	5
198200-33111	67	1
198200-33150	67	3
198200-33410	69	1
198200-33420	69	2
198200-33511	70	1
198200-34111	71	2
198200-34130	76	3
198200-34190	76	4
198200-34650-1	72	3
		8
198200-36341	78	6
198200-36390	78	5
		11
198200-36422	78	13
198200-47810	94	13
198200-48350	97	2
198200-56630	8	20
	9	20
	231	21
	232	21
198200-61490	106	10

Parts No.	Fig. No.	Ref. No.
198200-62560	154	1
198200-62910	157	2
198200-73150	181	2
198200-73170-1	46	9
198208-11310	15	3
198208-62810	188	3
198208-62970	157	3
198208-82200	184	3
198208-82220	184	4
198208-82250	184	6
198208-82260	184	7
198208-83650	186	16
198208-86620	192	12
198208-86710	192	17
198208-89530	4	4
198220-37900	81	17
198220-46500	98	2
198220-48140	95	2
198220-48750	95	6
198220-61351	136	4
	137	4
198220-63340	191	1
198223-46250	98	1
198223-52151	111	9
198234-48650	124	2
198245-46680	91	14
		15
198253-75430	245	3
198254-71600	176	6
198254-71700	176	7
198255-82640	184	30
	186	3
198255-82690	184	67
198255-82701	184	38
198255-83550	184	69
	186	29
	189	9
		10
	206	8
	207	8
198266-24980	83	3
198268-51660	192	25
198268-82270	184	66
	186	34
198269-52190	112	1
		2
		3
198280-13920	24	8
198280-14740-1	29	1
198280-14760	29	3

Parts No.	Fig. No.	Ref. No.
198280-24340	59	1
198280-28350	56	16
198280-29570	59	54 B
198280-29840	59	22
198280-29870	59	23
198280-29880	59	32
198280-29890	59	24
198280-29940	59	25
198280-29950	59	27
198280-29960	59	33
198280-34510-1	72	2
198280-34610-1	72	7
198280-34760	74	4
198280-42810-1	83	19
198280-47430	93	15
198280-53400	119	2
198280-53750	120	9
	122	17
198280-65950	173	3
198283-14311	26	4
198287-65200	170	13
198287-83640	186	15
198290-32750	66	3
198290-37510	80	21
198360-52320	113	2
198360-52330	113	3
198431-47350	93	14
198448-37450	81	2
198451-28750	50	29
198460-83350	40	5
	41	4
	184	53
	189	7
		8
	190	1
	204	7
	205	7
198463-82350	184	10
198463-82551	184	24
198463-83610	186	12
198463-83760	186	26
198463-86790	228	4
198475-32660	26	6
	66	4
198483-32660	33	3
198492-82150	184	9
198492-82590	184	27
198535-52110	109	5
198535-52120	104	8
	105	8

Parts No.	Fig. No.	Ref. No.
198535-52120	109	6
198535-52130	104	9
	105	9
	109	7
198535-52140	101	12
	102	12
	104	10
	105	10
	109	8
1A1040-28470	46	7
1A6280-85540	189	17
	206	9
	207	9
1A6300-32220	91	3
1A6382-51510	101	6
	102	6
	104	2
	105	2
1A6481-62650	123	3
1A6660-24250	43	4
1A7030-53560	151	3
1A7030-87730	196	10
1A7030-87970	196	16
1A7030-88060	196	17
1A7030-88710	4	1
		2
	196	23
1A7100-53220	119	3
1A7100-53230	119	4
1A7100-53400	120	2
	122	2
1A7100-53420	120	3
	122	3
1A7100-64110	161	2
	191	7
1A7130-37990	80	17
1A7170-86580	192	9
1A7170-86590	192	9 A
1A7180-04170	8	11
	9	11
	231	11
	232	11
1A7180-04180	8	16
		21
	9	16
		21
	231	12
		19
	232	12
		19

Parts No. Index

Parts No.	Fig. No.	Ref. No.
1A7180-04850	8	29
	9	29
	11	6
	231	24
	232	24
1A7180-48191	96	4
1A7180-48210	96	5
1A7180-61780	139	15
		16
		17
1A7180-61790	196	4
1A7210-83210	185	4
1A7210-86610	192	10
1A7210-93130	186	28
1A7260-78700	3	6
1A7320-82630	184	29
1A7320-82750	184	41
1A7320-82760	184	43
1A7320-82770	184	45
1A7335-52120	111	2
1A7335-71250	176	3
1A7335-71760	176	8
1A7335-74610	180	9
1A7340-52290	111	11
1A7340-54100	220	5
1A7400-29260	59	4
1A7400-29310	59	5
1A7400-29340	59	6
1A7400-29350	59	7
1A7400-29360	59	8
1A7400-29370	59	9
1A7400-29380	59	10
1A7400-29390	59	11
1A7400-29420	59	30
1A7400-29430	59	12
1A7400-29450	59	31
1A7400-29460	59	13
1A7400-29470	59	14
1A7400-29480	59	15
1A7400-29660	59	16
1A7400-29670	59	17
1A7400-29740	59	18
1A7400-29751	59	19
1A7400-29780	59	20
1A7400-29800	59	21
1A7400-53530	120	6
	122	13
1A7450-43680	176	9
1A7450-52180	109	9
1A7450-62320	151	11

Parts No.	Fig. No.	Ref. No.
1A7450-62320	162	1
1A7470-82400	184	11
1A7470-82410	184	12
1A7470-82420	184	13
1A7470-82440	184	17
1A7470-82450	184	18
1A7470-82471	184	19
1A7470-82481	184	20
1A7470-82510	184	22
1A7470-82520	184	23
1A7470-82560	184	25
1A7470-82570	184	26
1A7470-82580	184	14
1A7470-82640	184	31
1A7470-82650	184	32
1A7470-82660	184	33
1A7470-82670	184	34
1A7470-82680	184	37
1A7470-82720	184	39
1A7470-82730	184	40
1A7470-82750	184	42
1A7470-82760	184	44
1A7470-82800	184	46
1A7470-82810	184	48
1A7470-82820	184	51
1A7470-82880	184	15
1A7470-82890	184	16
1A7470-82900	184	49
1A7470-82950	184	52
1A7470-86270	220	6
1A7470-86750	121	2
1A7470-86770	121	3
1A7500-74670	180	10
1A7500-74680	180	8
1A7510-57200	111	14
1A7522-52950	129	4
		5
		6
	130	4
		5
		6
	131	1
		2
		3
		4
	132	1
		2
		3
		4
		5

Parts No.	Fig. No.	Ref. No.
1A7522-52950	132	6
		7
		8
		9
1A7540-26620	50	16
1A7540-26630	50	17
1A7540-26640	50	18
1A7540-26670	50	19
1A7601-00650	10	1
1A7640-43450	89	1
1A7790-01160	80	1
1A7805-52420	146	2
1A7805-52550	204	8
	205	8
	206	2
	207	2
1A7805-52600	118	2
1A7815-32810	16	2
1A7850-52110	114	1
1A7850-52130	114	2
1A7870-24910	83	2
1A7870-60750	139	4
1A7874-65400	171	4
1A7874-65470	169	6
	170	7
1A7880-47550	98	3
1A7880-47560	98	4
1A7880-47570	98	5
1A7880-47580	98	6
1A7880-47950	92	7
1A7882-85620	217	5
	218	5
1A7882-85630	217	6
	218	6
1A8042-04540	11	3
1A8042-46430	90	3
1A8043-53600	120	4
	122	11
1A8043-53640	120	7
	122	14
1A8060-01220	5	4
1A8060-01250	5	11
1A8060-04180	8	12
	9	12
	231	13
	232	13
1A8060-04530	11	2
1A8060-15410	34	3
1A8060-15721	36	2
1A8060-15741	36	6

Parts No.	Fig. No.	Ref. No.
1A8060-15751	36	7
1A8060-15761	36	8
1A8060-15780	36	9
1A8060-15791	36	3
1A8060-15801	36	4
1A8060-15840	36	5
1A8060-17601	38	2
1A8060-17610	38	3
1A8060-17631	38	4
1A8060-25450	56	13
1A8060-38400	77	2
1A8060-39390	79	6
1A8060-46410	90	1
1A8060-46411	90	1 -1
	230	2
1A8060-46420	90	2 -1
	230	3
1A8060-46440	90	4
1A8060-46441	230	4
1A8060-46460	90	5
1A8060-46470	90	7
1A8060-51322	115	3
1A8060-51940	104	7
	105	7
1A8060-52130	111	3
1A8060-52140	111	4
1A8060-52170	111	5
1A8060-52530	221	2
1A8060-53400	122	4
1A8060-53410	122	5
1A8060-53420	122	6
1A8060-53430	120	5
	122	7
		12
1A8060-53440	122	8
1A8060-54103	206	3
	207	3
1A8060-54112	206	4
	207	4
1A8060-54120	206	5
	207	5
1A8060-54130	206	6
	207	6
1A8060-54140	206	7
	207	7
1A8060-54230	204	4
	205	4
1A8060-54240	204	5
	205	5
1A8060-54260	151	4

Parts No. Index

Parts No.	Fig. No.	Ref. No.
1A8060-55600	5	13
1A8060-61662	147	6
1A8060-61671	147	9
1A8060-61672	147	9 -1
1A8060-61680	115	5
1A8060-61690	115	6
1A8060-65310	169	1
	170	2
1A8060-65560	168	3
	169	8
1A8060-65590	169	9
	170	9
1A8060-65780	169	11
	170	11
1A8060-67450	115	7
1A8060-67471	115	8
1A8060-67501	115	9
1A8060-67780	174	2
1A8060-68310	223	15
1A8060-84280	149	15
	151	27
1A8060-86300	228	1
1A8060-86310	228	1 -1
		2
1A8060-86350	228	3
		5
1A8060-87400	197	4
1A8060-87411	197	5
1A8060-88931	122	20
1A8061-65100	172	3
1A8061-65120	171	1
1A8061-65130	172	1
	173	1
1A8061-65140	171	2
1A8066-04920	11	7
1A8070-33250	68	1
1A8070-53140	124	4
		6
1A8070-61330	139	10
		11
1A8070-62240	155	9
	183	1
1A8070-62980	157	4
1A8070-62990	157	6
1A8071-13450	16	1
1A8071-14710-1	28	2
		7
1A8091-29900	96	1
1A8091-29910	96	2
1A8100-24180	46	8

Parts No.	Fig. No.	Ref. No.
1A8101-73210	180	11
1A8110-82650	186	4
		5
1A8110-82660	186	6
		7
1A8110-82670	184	35
		36
	186	8
		9
		10
1A8110-83710	186	18
		19
		33
1A8110-83730	34	7
	155	1 -1
	184	54
	186	21
		22
		23
		24
	189	11
	190	2
1A8110-84210	151	22
		23
1A8110-86300	221	4
1A8110-86310	221	5
1A8110-86330	221	6
1A8110-86340	221	7
1A8110-86350	221	8
1A8110-86360	221	9
1A8110-86370	221	10
1A8110-86450	221	11
1A8110-86460	221	12
1A8110-86470	221	13
1A8110-86480	221	14
1A8110-86490	221	15
1A8110-86920	193	2
1A8111-84220	196	6
1A8111-88680	196	22
1A8160-11051	219	1
1A8160-11121	219	2
1A8160-46670	88	1
1A8160-46910	229	34
1A8160-46960	229	35
1A8160-51500	106	1
1A8160-51522	106	2
1A8160-51531	106	3
1A8160-65630	169	10
	170	10
1A8240-05110	14	2

Parts No.	Fig. No.	Ref. No.
1A8240-05120	14	3
1A8240-05130	14	4
1A8240-05170	14	5
1A8240-05180	14	6
1A8250-48280	229	45
1A8250-65630	169	12
	170	1
1A8250-99320	220	10
1A8260-29610	61	10
1A8265-46250	229	9
1A8265-46270	229	10
1A8275-26790	50	20
1A8275-51540	106	4
1A8275-51670	2	16
		48
	3	3
	11	8
		9
		10
	42	15
	62	44
	101	7
		24
	102	7
		24
	103	2
		4
	104	4
	105	4
	136	2
	137	2
	196	2
	198	1
1A8296-60440	149	20
	151	38
1A8300-51210	119	1
	208	9
	220	3
	229	47
1A8300-61750	161	1
1A8300-85430	182	4
		4 -1
		4 -2
1A8300-85440	182	5
		5 -1
		5 -2
1A8300-85910	182	7
		9 C
1A8300-85920	182	8
		9 D

Parts No.	Fig. No.	Ref. No.
1A8300-85930	182	9
		9 E
1A8310-12310	17	2
1A8310-12330	17	1
1A8310-12510	17	3
1A8310-12540	17	4
	37	4
1A8310-12550	17	8
1A8310-12580	17	9
1A8310-12610	17	5
		10
	37	5
1A8310-12620	17	6
		11
1A8310-12630	17	7
		12
1A8310-12640	37	6
1A8310-12651	37	3
1A8310-13110	18	1
1A8310-13120	18	2
1A8310-13200	19	1
1A8310-13210	19	2
1A8310-13230	19	4
1A8310-13240	19	5
1A8310-13250	19	9
1A8310-13260	19	6
1A8310-13270	19	7
1A8310-13280	20	1
1A8310-13510	21	1
1A8310-13520	21	2
1A8310-13530	21	3
1A8310-13730	24	5
1A8310-13820	25	1
1A8310-13910	24	7
		7 -1
1A8310-14270	25	2
1A8310-14320	25	3
1A8310-14330	26	5
1A8310-14650	27	2
1A8310-14660	27	3
1A8310-17910	42	10
		11
1A8310-25610	222	4
1A8310-25810	49	6
	52	2
1A8310-28560	54	8
1A8310-36310	78	3
1A8310-36410	78	12
1A8310-42180	83	10
1A8310-48810	91	25

Parts No. Index

Parts No.	Fig. No.	Ref. No.
1A8310-48810	96	8
	100	2
1A8330-04030	8	2
	9	2
	231	1
	232	1
1A8330-07510	237	1
1A8330-07530	237	3
1A8330-07550	237	4
1A8330-07740	234	7
1A8330-07750	234	8
1A8330-07760	234	9
1A8330-07770	234	10
1A8330-07780	234	11
1A8330-07790	234	12
1A8330-07800	234	13
1A8330-07810	234	14
1A8330-07820	234	15
1A8330-07830	234	16
1A8330-07840	234	17
1A8330-07850	234	18
1A8330-07860	234	19
1A8330-07870	234	20
1A8330-07880	234	21
1A8330-08090	235	10
	240	8
1A8330-08100	246	1
1A8330-08110	246	2
1A8330-08120	246	3
1A8330-08130	246	4
1A8330-08140	246	5
1A8330-08320	242	3
1A8330-08360	235	15
	240	13
	242	5
1A8330-08650	238	1
	241	1
1A8330-08690	235	16
	240	14
1A8330-08700	235	17
	240	15
1A8330-08780	238	5
	241	5
1A8330-08790	238	6
	241	6
1A8330-08840	238	10
	241	10
1A8330-08870	238	11
	241	11
1A8330-08880	238	12

Parts No.	Fig. No.	Ref. No.
1A8330-08880	241	12
1A8330-26240	50	15
1A8330-46600	91	12
1A8330-47700	229	43
1A8330-65432	168	2
1A8330-65620	171	5
1A8330-65930	171	6
1A8330-65950	172	2
1A8400-04140	8	9
	9	9
	231	9
	232	9
1A8400-04160	8	10
	9	10
	231	10
	232	10
1A8400-04210	8	18
	9	18
	231	15
	232	15
1A8400-04220	8	17
	9	17
	231	16
	232	16
1A8400-04240	8	13
	9	13
	231	17
	232	17
1A8400-04250	8	14
	9	14
	231	18
	232	18
1A8400-04300	231	22
	232	22
1A8400-13150	16	5
1A8400-13161	16	6
1A8400-13480	16	7
1A8400-13610	23	1
1A8400-15710	36	1
1A8400-17021	37	7
1A8400-17050	37	9
1A8400-17100	224	1
1A8400-17140	37	12
	224	2
1A8400-17150	224	3
1A8400-17200	37	19
1A8400-17500-1	38	1
1A8400-17612	39	1
1A8400-17660	34	4
	39	2

Parts No.	Fig. No.	Ref. No.
1A8400-17711	40	1
	41	1
1A8400-17721	40	2
	41	2
1A8400-17741	41	3
1A8400-17760	34	5
1A8400-17801	42	1
1A8400-17832	42	2
1A8400-17861	42	8
1A8400-17870	42	3
1A8400-17900	42	9
1A8400-17950	42	12
		13
1A8400-24360	47	16
1A8400-25150	48	2
	49	1
1A8400-25480	49	2
1A8400-28250	49	9
1A8400-28280	56	5
1A8400-28520	80	5
1A8400-31400	63	1
1A8400-32600	66	1
1A8400-32610	66	2
1A8400-36300	78	2
1A8400-36380	78	4
		10
1A8400-36400	78	9
1A8400-37730	81	9
1A8400-37740	81	12
1A8400-37750	81	10
1A8400-37760	81	13
1A8400-37800	81	15
1A8400-37850	81	16
1A8400-37901	81	1
1A8400-37940	81	3
1A8400-37970	81	4
1A8400-41110	82	2
1A8400-41150	82	4
1A8400-41200	82	3
		5
1A8400-42100	83	4
1A8400-42110	83	5
1A8400-42170	83	9
1A8400-43110	83	20
1A8400-43310	84	1
1A8400-43320	84	2
1A8400-43330	84	3
1A8400-43350	84	4
1A8400-43410	85	1
1A8400-44110	85	2

Parts No.	Fig. No.	Ref. No.
1A8400-44210	85	3
1A8400-44230	85	4
1A8400-44410	85	6
1A8400-44420	85	7
1A8400-44480	85	9
1A8400-44490	85	10
1A8400-46301	89	3
1A8400-46321	89	4
1A8400-46400	230	1
1A8400-47040	93	5
1A8400-47050	93	6
1A8400-47060	93	8
1A8400-47070	93	10
1A8400-47250	94	3
1A8400-47330	93	11
1A8400-47460	93	16
1A8400-47950	93	17
1A8400-48341	95	5
1A8400-48810	95	7
1A8400-51050	101	3
	102	3
1A8400-51060	101	4
	102	4
1A8400-51400	101	20
	102	20
1A8400-51401	101	20 -1
	102	20 -1
1A8400-51800	101	9 -1
	102	9 -1
1A8400-51810	101	9
		25
	102	9
		25
	103	3
	104	5
	105	5
	108	3
	109	3
1A8400-51820	108	4
1A8400-51830	101	10
	102	10
	109	4
1A8400-51840	101	11
	102	11
	105	6
1A8400-51863	117	2
1A8400-51880	104	6
1A8400-52140	115	4
1A8400-52430	118	1
1A8400-53101	124	3

Parts No. Index

Parts No.	Fig. No.	Ref. No.
1A8400-53201	124	5
1A8400-56600	8	19
	9	19
	231	20
	232	20
1A8400-58920	145	2
	146	3
1A8400-60700	140	5
1A8400-60961	139	5
1A8400-61210	139	9
1A8400-61211	139	9 -1
1A8400-61380	145	6
1A8400-61411	139	13
1A8400-61462	142	3
	143	2
1A8400-61501	145	9
1A8400-61920	139	25
1A8400-61960	139	28
1A8400-62300	152	3
1A8400-62301	152	3 -1
1A8400-62341	152	5
1A8400-62350	152	6
1A8400-62850	156	7
1A8400-62950	40	4
	41	6
1A8400-62980	157	5
1A8400-62990	157	7
1A8400-64300	165	2
	189	5
1A8400-65150	139	32
1A8400-65280	139	35
1A8400-65320	169	2
	170	3
1A8400-67600	174	4
1A8400-67700	175	2
1A8400-67710	175	5
1A8400-67720	175	6
1A8400-67820	174	5
1A8400-67830	174	7
1A8400-67900	223	12
1A8400-67920	223	14
1A8400-67970	174	9
1A8400-72461	178	3
	179	3
1A8400-72810	37	21
1A8400-87910	195	6
1A8401-17842	42	7
1A8401-48850	96	9
1A8401-62860	156	3
1A8405-01152	62	8

Parts No.	Fig. No.	Ref. No.
1A8405-01710	6	5
1A8405-13310	20	2
1A8405-14630	27	1
1A8405-15101	34	1
1A8405-15300	35	1
1A8405-17210	23	2
1A8405-17301	37	2
1A8405-17800	42	1 -1
1A8405-17812	42	5
1A8405-17822	42	6
1A8405-27270	80	4
1A8405-27340	80	8
1A8405-27402	62	13
1A8405-27520	60	2
1A8405-27530	60	3
1A8405-27560	60	6
1A8405-29002	62	12
1A8405-29251	62	14
1A8405-29301	62	15
1A8405-29311	62	16
1A8405-29370	62	18
1A8405-29400	62	19
1A8405-29431	62	20
1A8405-29502	62	22
1A8405-29512	62	23
1A8405-29601	62	25
1A8405-29650	62	31
1A8405-29700	62	32
1A8405-29710	62	35
1A8405-29720	62	38
1A8405-29730	62	41
1A8405-29910	62	26
1A8405-35800	62	3
1A8405-35850	62	4
1A8405-37100	80	6
1A8405-37192	80	11
1A8405-37310	80	13
1A8405-37410	80	14
1A8405-37520	80	23
1A8405-37550	80	16
1A8405-42161	83	8
1A8405-42200	83	11
1A8405-42301	83	17
1A8405-42350	83	18
1A8405-45150	91	4
1A8405-45250	91	5
1A8405-45270	91	6
1A8405-45360	91	7
1A8405-45380	91	8
1A8405-46100	92	2

Parts No.	Fig. No.	Ref. No.
1A8405-46321	91	9
1A8405-46450	91	11
1A8405-46600	91	13
1A8405-47000	93	3
1A8405-47030	93	4
1A8405-47052	93	7
1A8405-47301	91	16
1A8405-47354	91	17
1A8405-47355	91	17 -1
1A8405-47356	91	17 -2
1A8405-47605	92	3
1A8405-47606	92	3 -1
1A8405-47751	92	6
1A8405-47902	91	18
1A8405-47903	91	18 -1
1A8405-47912	91	19
1A8405-47913	91	19 -1
1A8405-47952	91	21
1A8405-47962	91	22
1A8405-48360	98	11
1A8405-48400	91	24
1A8405-48650	100	1
1A8405-48681	96	6
1A8405-48900	96	10
1A8405-49050	98	16
1A8405-56002	126	1
1A8405-56902	126	3
1A8405-60700	145	4
	146	5
1A8405-60710	145	5
	146	6
1A8405-61450	145	7
	146	8
1A8405-61471	145	8
	146	9
1A8405-61532	145	10
	146	10
1A8405-61541	145	11
	146	11
1A8405-61570	145	13
	146	13
1A8405-61581	145	14
	146	14
1A8405-61700	147	1
1A8405-61710	147	2
1A8405-61720	147	3
1A8405-61730	147	4
1A8405-61970	155	3
1A8405-62003	155	4
1A8405-62201	155	7

Parts No.	Fig. No.	Ref. No.
1A8405-62210	155	8
1A8405-62310	152	4
1A8405-62311	152	4 -1
1A8405-62910	158	1
	159	1
1A8405-63550	149	11
	151	13
1A8405-63560	149	12
	151	14
1A8405-63670	149	14
	151	16
1A8405-65050	167	1
1A8405-65353	223	4
1A8405-65510	169	7
1A8405-65800	169	5
	170	6
1A8405-65851	101	14
	102	13
1A8405-65900	101	13
	102	14
1A8405-67701	223	5
1A8405-67710	223	8
1A8405-67721	223	9
1A8405-68990	92	17
1A8405-68991	92	17 -1
1A8405-71700	177	4
1A8405-72152	179	1
1A8405-72352	178	1
1A8405-73012	180	2
1A8405-73230	180	1
1A8405-73501	180	3
1A8405-74101	180	4
1A8405-74250	180	5
1A8405-74400	180	6
1A8405-74800	180	7
1A8406-07000	234	1
1A8406-07010	234	2
1A8406-07110	236	1
1A8406-07120	236	2
1A8406-07300	235	1
1A8406-07310	236	3
1A8406-07350	236	4
1A8406-07360	236	5
1A8406-07400	234	3
1A8406-07500	234	5
1A8406-07520	237	2
1A8406-07560	234	6
1A8406-07570	237	5
1A8406-07580	237	6
1A8406-07590	237	7

Parts No. Index

Parts No.	Fig. No.	Ref. No.
1A8406-07900	235	2
1A8406-08000	239	1
1A8406-08010	235	3
	240	1
1A8406-08020	235	4
	240	2
1A8406-08030	235	5
	240	3
1A8406-08040	235	6
	240	4
1A8406-08050	235	7
	240	5
1A8406-08060	235	8
	240	6
1A8406-08080	235	9
	240	7
1A8406-08090	235	11
	240	9
1A8406-08300	242	1
1A8406-08310	242	2
1A8406-08320	242	4
1A8406-08500	243	1
1A8406-08510	243	2
1A8406-08520	243	3
1A8406-08530	243	4
1A8406-08540	243	5
1A8406-08550	243	6
1A8406-08600	244	1
1A8406-08610	244	2
1A8406-08620	244	3
1A8406-08630	244	4
1A8406-08710	238	2
	241	2
1A8406-08720	238	3
	241	3
1A8406-08730	238	4
	241	4
1A8406-08740	235	18
	240	16
1A8406-08750	234	23
	239	3
1A8406-08760	234	24
	239	4
1A8406-08770	234	25
	239	5
1A8406-08780	234	26
	239	6
1A8406-08790	235	19
	240	17
1A8406-08800	238	7

Parts No.	Fig. No.	Ref. No.
1A8406-08800	241	7
1A8406-08810	238	8
	241	8
1A8406-08820	238	9
	241	9
1A8406-08830	235	20
	240	18
1A8406-08840	235	21
	240	19
1A8406-08850	235	22
	240	20
1A8406-08860	235	23
	240	21
1A8406-08870	235	24
	240	22
1A8406-08880	235	25
	240	23
1A8406-08890	235	26
	240	24
1A8406-08910	239	7
1A8406-08920	234	27
	239	8
1A8406-13710	24	2
1A8406-14250	33	2
1A8406-19110	116	1
1A8406-35080	62	2
1A8406-36110	78	7
1A8406-36120	78	8
1A8406-37200	80	7
1A8406-38501	77	3
1A8406-38750	79	4
1A8406-38770	79	5
1A8406-38811	77	4
1A8406-38831	77	5
1A8406-46340	91	10
1A8406-47301	94	2
1A8406-47310	94	4
1A8406-47370	94	11
1A8406-47380	94	5
1A8406-47411	94	6
1A8406-47490	94	12
1A8406-48100	98	7
1A8406-48150	98	8
1A8406-48200	98	9
1A8406-48250	98	10
1A8406-48750	96	7
1A8406-53710	122	16
1A8406-58270	133	1
	134	2
1A8406-62091	155	5

Parts No.	Fig. No.	Ref. No.
1A8406-62111	155	6
1A8406-62112	155	6 -1
1A8406-62191	111	15
1A8406-62300	165	1
1A8406-62330	162	2
1A8406-62380	150	1
1A8406-62470	163	1
1A8406-62500	155	11
1A8406-62501	155	11 -1
1A8406-62600	155	12
1A8406-62601	155	12 -1
1A8406-62602	155	12 -2
1A8406-62610	155	13
1A8406-62611	155	13 -1
1A8406-62612	155	13 -2
1A8406-62630	79	1
1A8406-62640	79	2
1A8406-63100	160	1
1A8406-63110	160	15
	225	2
	226	3
	227	15
1A8406-63120	160	3
	227	3
1A8406-63130	160	4
1A8406-63140	160	5
	227	5
1A8406-63160	160	6
	227	6
1A8406-63170	160	7
	227	7
1A8406-63180	160	8
	227	8
1A8406-63190	160	9
	227	9
1A8406-63310	160	10
	227	10
1A8406-63340	160	11
	227	11
1A8406-63500	149	10
1A8406-63601	149	13
1A8406-64110	177	3
1A8406-65210	171	7
1A8406-65270	168	4
1A8406-65351	169	3
	170	4
1A8406-65370	169	4
	170	5
1A8406-65400	168	5
1A8406-65500	172	5

Parts No.	Fig. No.	Ref. No.
1A8406-75700	245	1
1A8406-75730	245	5
1A8406-75740	245	6
1A8406-75750	245	10
1A8406-75820	245	11
1A8406-76020	210	1
1A8406-76100	211	1
1A8406-76200	212	1
1A8406-76300	213	1
1A8406-76400	214	1
1A8406-76500	210	2
1A8406-76510	210	3
1A8406-76520	210	4
1A8406-76600	210	5
1A8406-76610	210	6
1A8406-82501	166	1
1A8406-85050	182	3 -1
1A8406-85060	182	3 -2
1A8406-85090	182	3
1A8406-85450	182	6
		6 -1
		6 -2
1A8406-85630	182	9 A
1A8406-85650	182	9 B
1A8406-93130	208	11
1A8406-93140	208	12
1A8406-93170	217	1
1A8406-93180	217	7
	218	7
1A8406-99700	245	4
1A8410-17100	37	11
1A8410-17110	37	17
1A8410-17160	37	13
1A8410-17170	37	14
1A8410-24320	47	1
1A8410-24330	47	2
1A8410-24350	59	2
1A8410-25050	47	5
1A8410-25090	50	2
1A8410-25150	59	3
1A8410-25151	59	3 -1
1A8410-25410	48	3
1A8410-25790	48	7
1A8410-27020	59	49
1A8410-27232	59	50
1A8410-27240	59	53
1A8410-27260	59	51
1A8410-27520	54	2
1A8410-27550	54	4
1A8410-27570	54	5

Parts No. Index

Parts No.	Fig. No.	Ref. No.
1A8410-27580	54	6
1A8410-27720	54	7
1A8410-29810	61	11
1A8410-29940	59	26
1A8410-29950	59	28
1A8410-29960	59	34
1A8410-29961	59	34 -1
1A8410-29970	59	29
1A8410-29971	59	29 -1
1A8410-29980	59	8 -1
1A8415-21310	43	3
1A8415-22160	45	1
1A8415-22170	45	5
1A8415-22180	45	2
1A8415-22190	45	3
1A8415-24150	46	5
1A8415-24370	47	4
1A8415-25510	48	4
1A8415-25530	49	3
1A8415-25540	49	4
1A8415-25660	48	5
1A8415-25820	49	7
1A8415-26010	50	6 -1
1A8415-26020	50	5
1A8415-26030	50	6
1A8415-26040	50	26
1A8415-26050	50	7
1A8415-26070	50	8
1A8415-26080	50	9
1A8415-26090	50	10
1A8415-26110	50	11
1A8415-26120	50	12
1A8415-26130	50	13
1A8415-26140	50	14
1A8415-26150	50	7 -1
1A8415-26190	50	10 -1
1A8415-26270	51	2
1A8415-26310	52	3
1A8415-26320	52	4
1A8415-26330	52	5
	222	2
1A8415-26340	52	6
1A8415-26410	222	5
1A8415-26420	222	6
1A8415-26520	222	26
1A8415-26530	222	27
1A8415-26540	222	7
1A8415-26550	222	8
1A8415-26560	222	9
1A8415-26570	222	10

Parts No.	Fig. No.	Ref. No.
1A8415-26580	222	11
1A8415-26590	222	12
1A8415-26610	222	28
1A8415-26670	50	1
1A8415-26680	50	28
1A8415-26810	53	1
1A8415-26830	53	2
1A8415-26930	203	1
1A8415-27690	55	3
1A8415-27710	55	4
1A8415-27780	55	5
1A8415-27820	55	6
1A8415-27830	55	7
1A8415-29010	61	2
1A8415-29080	61	3
1A8415-29150	61	5
1A8415-29490	59	52 -1
1A8415-29530	59	54 A
1A8415-29560	59	52
1A8415-29750	61	6
1A8415-33210	67	5
1A8416-21100	43	1
1A8416-24100	46	2
1A8416-24190	46	20
1A8416-24360	57	1
1A8416-25520	49	5
1A8416-25650	48	6
1A8416-26301	222	1
	223	1
1A8416-26400	222	3
1A8416-27840	55	8
1A8416-28220	56	4
1A8416-28260	49	8
1A8416-28270	56	14
1A8416-28330	56	6
1A8416-28470	57	2
1A8416-28480	57	3
1A8416-28490	57	4
1A8416-28510	57	5
1A8416-28540	58	1
1A8416-28730	57	6
1A8416-28770	57	7
1A8420-00561	2	1
1A8420-00610	2	3
1A8420-00630	2	4
1A8420-00670	2	6
1A8420-00810	2	7
1A8420-00820	2	8
1A8420-00951	2	9
1A8420-01172	5	2

Parts No.	Fig. No.	Ref. No.
1A8420-01173	5	2 -1
1A8420-01211	5	3
1A8420-01352	6	1
	7	1
1A8420-01390	6	1 -1
	7	1 -1
1A8420-01401	6	2
	7	2
1A8420-01431	6	3
	7	3
1A8420-01440	6	4
	7	4
1A8420-01480	2	10
1A8420-01530	2	12
1A8420-01711	7	5
1A8420-01850	6	17
	7	17
1A8420-01851	6	17 -1
	7	17 -1
1A8420-03100	6	6
	7	6
1A8420-03101	6	6 -1
	7	6 -1
1A8420-04080	231	3
	232	3
1A8420-04093	8	5
	9	5
	231	26
	232	26
1A8420-04101	8	6
	9	6
	231	6
	232	6
1A8420-04111	8	7
	9	7
	231	7
	232	7
1A8420-04121	8	8
	9	8
	231	8
	232	8
1A8420-04200	8	15
	9	15
	231	14
	232	14
1A8420-04211	8	22
	231	27
1A8420-04261	8	25
	9	25
	231	28

Parts No.	Fig. No.	Ref. No.
1A8420-04261	232	29
1A8420-04320	8	27
	9	27
	231	23
	232	23
1A8420-04350	11	1
1A8420-04610	11	17
1A8420-04940	12	1
1A8420-06010	14	7
1A8420-06020	14	8
1A8420-06150	14	9
1A8420-06202	14	10
1A8420-06354	14	11
1A8420-06400	14	12
1A8420-11210	15	2
1A8420-11310	148	1
1A8420-21250	44	1
1A8420-48211	95	3
1A8420-48301	95	4
1A8420-49101	99	1
1A8420-51600	108	2
1A8420-51810	101	35
	102	38
1A8420-58102	14	14
1A8420-58151	14	15
1A8420-58610	101	26
	102	26
1A8420-60102	137	3
1A8420-60160	3	4
1A8420-60180	3	5
1A8420-60600	138	2
1A8420-60651	140	3
1A8420-60670	140	4
1A8420-60802	138	3
1A8420-61011	139	6
1A8420-61021	139	7
1A8420-61341	139	12
1A8420-61400	2	18
1A8420-61401	2	18 -1
1A8420-61420	2	19
1A8420-61600	139	14
1A8420-61820	139	18
1A8420-61852	139	19
1A8420-61881	139	20
1A8420-61891	139	23
1A8420-61901	148	3
1A8420-61910	139	24
1A8420-61930	139	26
1A8420-61941	139	27
1A8420-62180	188	1

Parts No. Index

Parts No.	Fig. No.	Ref. No.
1A8420-62190	188	2
1A8420-62191	188	2 -1
1A8420-62251	153	2
1A8420-62261	153	3
1A8420-63111	41	7
1A8420-63120	187	1
	188	4
1A8420-65791	170	12
1A8420-82320	184	68
1A8420-83120	185	2
1A8420-83130	185	3
1A8420-84120	151	18
1A8420-84150	151	19
1A8420-84170	151	20
1A8420-84180	151	21
1A8420-84210	151	24
1A8420-84220	151	25
1A8420-84252	151	26
1A8420-84290	187	3
1A8420-84330	151	30
1A8420-84350	187	4
1A8420-84360	187	5
1A8420-84370	188	5
1A8420-84380	188	6
1A8420-84420	41	8
1A8420-84430	41	9
1A8420-84442	155	14
	183	3
1A8420-84452	155	15
	183	4
1A8420-84460	187	6
1A8420-84471	187	7
1A8420-84483	187	8
1A8420-84491	187	9
1A8420-84510	187	10
1A8420-84520	187	11
1A8420-84530	188	9
1A8420-84541	188	10
1A8420-84550	188	11
1A8420-84560	188	12
1A8420-84590	188	13
1A8420-84610	151	32
1A8420-84621	187	13
1A8420-84631	187	15
1A8420-84650	187	16
1A8420-84660	187	17
1A8420-84670	187	18
1A8420-84680	188	14
1A8420-84710	187	27
1A8420-84730	187	19

Parts No.	Fig. No.	Ref. No.
1A8420-84740	187	20
1A8420-84752	187	28
1A8420-84753	187	28 -1
1A8420-84760	187	29
1A8420-84770	187	30
1A8420-84780	187	31
1A8420-84790	187	21
1A8420-84800	187	23
1A8420-84860	187	25
1A8420-84871	188	21
1A8420-84880	188	22
1A8420-84901	188	23
1A8420-84910	188	24
1A8420-84920	187	33
1A8420-84930	187	34
1A8420-84940	188	27
1A8420-84951	188	28
1A8420-85331	189	14
1A8420-85500	190	3
1A8420-85510	190	4
1A8420-85520	190	5
1A8420-85530	190	6
1A8420-85540	190	7
1A8420-85550	190	8
1A8420-85560	189	18
1A8420-85581	190	9
1A8420-85591	190	10
1A8420-85601	189	19
1A8420-85611	189	20
1A8420-85631	189	21
1A8420-85641	189	22
1A8420-85652	190	11
1A8420-85672	190	12
1A8420-85681	190	13
1A8420-85690	189	23
1A8420-85711	190	14
1A8420-85720	190	15
1A8420-86400	192	3
	221	16
1A8420-86510	216	2
1A8420-86642	192	11
1A8420-86652	192	13
1A8420-86672	192	16
1A8420-86850	151	34
1A8420-87051	198	2
1A8420-87061	198	4
1A8420-87090	198	5
1A8420-87140	3	8
1A8420-87300	194	38
1A8420-87360	197	2

Parts No.	Fig. No.	Ref. No.
1A8420-87370	197	3
1A8420-87460	197	6
1A8420-87470	197	7
1A8420-87550	197	8
1A8420-87560	197	9
1A8420-87601	196	7
1A8420-87720	196	9
1A8420-87740	196	37
1A8420-87760	196	38
1A8420-87813	196	11
1A8420-87852	196	13
1A8420-87861	196	14
1A8420-87871	196	15
1A8420-87881	189	24
1A8420-87900	198	12
1A8420-87930	195	7
1A8420-87950	195	8
1A8420-87990	194	37
1A8420-88490	190	16
1A8420-88601	196	18
1A8420-88650	196	21
1A8420-89010	233	1
1A8420-89151	3	9
1A8420-89210	3	10
1A8420-89500	4	3
1A8421-04211	9	22
	232	28
1A8425-01104	5	1
1A8425-01105	5	1 -1
1A8425-01251	5	5
1A8425-05100	14	1
1A8425-11450	13	1
1A8425-14700	30	1
1A8425-14800	30	2
1A8425-34700	73	2
1A8425-34800	73	3
1A8425-46030	229	3
1A8425-46040	229	4
1A8425-46070	229	38
1A8425-46080	229	39
1A8425-46090	229	40
1A8425-46130	229	5
1A8425-46140	229	6
1A8425-46210	229	7
1A8425-46240	229	8
1A8425-46291	229	11
1A8425-46320	229	12
1A8425-46340	229	13
1A8425-46350	229	14
1A8425-46360	229	15

Parts No.	Fig. No.	Ref. No.
1A8425-46370	229	16
1A8425-46380	229	17
1A8425-46440	229	18
1A8425-46450	229	19
1A8425-46490	229	20
1A8425-46520	229	21
1A8425-46560	229	22
1A8425-46570	229	23
1A8425-46650	229	24
1A8425-46670	229	25
1A8425-46690	229	26
1A8425-46700	229	27
1A8425-46721	229	28
1A8425-46750	229	29
1A8425-46770	229	30
1A8425-46810	229	31
1A8425-46850	229	32
1A8425-46900	229	33
1A8425-46980	229	36
1A8425-47020	229	37
1A8425-47400	229	41
1A8425-47420	229	42
1A8425-58110	107	2
1A8425-58120	106	5
1A8425-60092	136	3
1A8425-61071	139	8
1A8425-61072	139	8 -1
1A8425-61460	144	1
1A8425-61501	146	12
1A8425-61550	145	12
1A8425-62160	164	1
1A8425-62170	164	2
1A8425-62300	153	4
1A8425-62632	156	1
1A8425-62643	156	2
1A8425-63501	151	12
1A8425-65510	170	8
1A8425-82112	184	1
1A8425-82123	184	2
1A8425-82611	184	28
1A8425-83110	185	1
1A8425-84101	151	17
1A8425-84261	187	2
1A8425-84302	151	28
1A8425-84312	151	29
1A8425-84610	187	12
1A8425-84620	187	14
1A8425-84791	187	22
1A8425-84800	187	24
1A8425-84821	187	32

Parts No. Index

Parts No.	Fig. No.	Ref. No.
1A8425-84822	187	32 -1
1A8425-85302	189	12
1A8425-85312	189	13
1A8425-85510	189	15
1A8425-85520	189	16
1A8425-86290	221	1
1A8425-86510	216	1
1A8425-87012	194	1
1A8425-87060	195	1
1A8425-87680	195	3
1A8425-87681	195	3 -1
1A8425-87922	194	35
1A8425-87942	194	36
1A8425-88630	196	19
1A8425-88640	196	20
1A8425-88970	8	26
	9	26
	196	24
	231	38
	232	39
1A8425-99370	229	1
1A8426-01500	2	11
1A8426-01550	2	47
1A8426-01610	140	1
1A8426-01660	140	11
1A8426-04110	8	46
	9	47
	231	46
	232	47
1A8426-04130	8	47
	9	46
		48
	231	47
	232	27
		48
1A8426-11010	15	1
1A8426-14780	31	1
1A8426-14790	31	2
		5
1A8426-14810	31	3
		6
1A8426-14880	31	4
1A8426-34720	74	2
1A8426-34740	74	3
1A8426-34780	75	2
1A8426-34790	75	3
		6
1A8426-34810	75	4
		7
1A8426-34880	75	5

Parts No.	Fig. No.	Ref. No.
1A8426-51100	101	5
1A8426-51101	101	5 -1
1A8426-51150	102	5
1A8426-51151	102	5 -1
1A8426-51200	103	1
1A8426-51302	104	1
1A8426-51351	105	1
1A8426-51400	101	21
	102	21
1A8426-51700	109	2
1A8426-51910	225	1
	226	1
1A8426-51920	226	2
1A8426-52350	225	4
	226	5
1A8426-52551	115	1
1A8426-52800	104	11
	105	11
1A8426-53400	104	17
	105	16
1A8426-53410	204	1
	205	1
1A8426-53430	206	1
	207	1
1A8426-53900	209	1
1A8426-53910	208	6
1A8426-54980	220	1
1A8426-58260	134	1
1A8426-58410	106	9
1A8426-58620	104	18
	105	17
1A8426-61150	140	14
1A8426-61171	140	15
1A8426-61380	146	7
1A8426-61450	140	6
1A8426-63100	227	1
1A8426-63130	227	4
1A8426-63200	225	3
1A8426-63240	225	5
	226	6
1A8426-63250	225	6
	226	7
1A8426-63260	225	7
	226	8
1A8426-63300	226	4
1A8426-63600	151	15
1A8426-65860	104	12
	105	12
1A8426-65870	104	13
	105	13

Parts No.	Fig. No.	Ref. No.
1A8426-65890	109	10
1A8426-67800	174	3
1A8426-67840	174	8
1A8426-80091	183	2
1A8426-80092	183	2 -1
1A8426-80093	183	2 -2
1A8426-81230	119	5
1A8426-81330	119	6
1A8426-82300	189	27
1A8426-83600	186	13
1A8426-84490	151	31
1A8426-84500	149	16
1A8426-85700	189	28
1A8426-85730	191	8
1A8426-85810	191	3
1A8426-87700	196	8
1A8426-87701	196	8 -1
1A8426-87830	196	12
1A8426-87831	196	12 -1
1A8426-93120	209	2
1A8426-93150	209	3
1A8426-93170	218	1
1A842E-34200	72	1
1A842E-34210	74	1
1A842E-34220	73	1
1A842E-34230	75	1
1A842E-51510	106	1 -1
1A842E-63110	227	4 A
1A842E-63130	160	4 A
1A8430-13720	24	3
1A8430-14240	33	1
1A8446-13610	23	1 -1
1A8446-13620	24	17
1A8470-04600	8	28
	9	28
1A8470-04650	11	4
1A8470-04660	11	5
1A8470-15200	34	2
1A8470-44230	85	5
1A8470-51800	147	7 -1
1A8470-51950	139	3
1A8470-53450	122	9
1A8470-53460	122	10
1A8470-53850	122	18
1A8470-61360	141	1
	250	1
1A8470-61510	124	7
1A8470-61520	124	8
1A8470-62280	149	8
1A8470-62290	149	9

Parts No.	Fig. No.	Ref. No.
1A8470-65160	139	33
1A8470-65170	139	34
1A8470-65590	139	36
1A8470-71100	176	2
1A8470-71390	176	4
1A8470-71500	176	5
1A8472-47060	93	9
1A8475-51910	220	4
1A8475-60060	140	7
1A8475-65010	168	1
1A8475-65250	171	3
1A8475-68783	92	10
1A8475-68860	92	11
1A8475-68890	92	12
1A8475-68912	92	13
1A8475-68922	92	14
1A8475-68970	92	16
1A8476-07410	234	4
1A8476-08160	235	12
	240	10
1A8476-08180	234	22
	235	13
	239	2
	240	11
1A8476-08190	235	14
	240	12
1A8476-11150	201	1
1A8476-11600	248	1
1A8476-11700	248	2
1A8476-11750	249	1
1A8476-11790	248	3
1A8476-11800	202	1
1A8476-11810	202	2
1A8476-11830	202	3
1A8476-11840	202	4
1A8476-11850	202	5
1A8476-11860	202	6
1A8476-51810	208	10
1A8476-51830	208	2
	209	8
1A8476-52250	208	3
	209	9
1A8476-53900	208	1
	209	7
1A8476-54500	208	5
	209	11
1A8476-57102	111	12
1A8476-58050	125	2
1A8476-58100	125	3
1A8476-58110	125	4

Parts No. Index

Parts No.	Fig. No.	Ref. No.
1A8476-62190	123	2
1A8476-65210	173	2
1A8476-65211	173	2 -1
1A8476-65240	172	4
1A8476-65300	170	14
1A8476-65600	217	4
	218	4
1A8476-91000	247	1
	248	6
1A8476-91160	248	7
1A8476-91170	249	3
1A8480-65780	169	10 -1
	170	11 -1
1A8484-54200	204	2
	205	2
1A8484-54220	204	3
	205	3
1A8484-54250	204	6
	205	6
1A8484-82290	186	31
1A8484-83300	186	11
1A8484-86550	192	4
1A8484-86560	192	5
1A8484-87090	197	13
		13 -1
1A8484-87110	195	2
1A8484-87280	194	34
1A8484-87310	195	4
1A8484-87320	194	13
1A8484-87330	194	15
1A8484-87900	195	5
1A8484-88990	196	25
1A8485-51960	215	2
1A8485-86000	215	3
1A8485-86100	215	1
1A8485-87200	194	3
1A8485-87210	194	4
1A8485-87220	194	5
1A8485-87230	194	6
1A8485-87240	194	7
1A8485-87260	194	8
1A8485-87280	194	9
1A8485-87290	194	10
1A8485-87300	194	11
1A8485-87310	194	12
1A8485-87320	194	14
1A8485-87330	194	16
1A8485-87340	194	17
1A8485-87350	194	18
1A8485-87360	194	19

Parts No.	Fig. No.	Ref. No.
1A8485-87370	194	20
1A8485-87380	194	21
1A8485-87390	194	22
1A8485-87400	194	23
1A8485-87410	194	24
1A8485-87420	194	25
1A8485-87430	194	26
1A8485-87440	194	27
1A8485-87450	194	28
1A8485-87460	194	29
1A8485-87470	194	30
1A8485-87480	194	31
1A8485-87490	194	32
1A8485-87500	194	33
1A8486-53640	208	4
	209	10
1A8486-58320	77	6
1C1011-33990	184	5
1C1230-23250	62	10
1C6053-32020	80	10
1C6215-81681	203	5
1C6281-52310	62	45
	94	14
1C6281-52320	60	8
	61	12
	79	7
	81	7
		18
	91	29
	92	9
	93	18
	175	1
	223	3
1C6360-65700	61	13
	77	7
	250	2
1C6650-37480	120	1
	122	1
1C6720-47610	92	5
1C6900-23020	22	1
1C6980-07210	125	1
1C6982-49480	5	7
1C7100-08151	127	1
1C7170-91300	140	8
1D4220-22870	43	5
1D4270-17650	135	1
1E4440-44160	93	2
1E6190-54080	18	4
1E6190-54430	52	8
1E6190-55660	47	6

Parts No.	Fig. No.	Ref. No.
1E6190-55710	47	7
1E6210-51910	198	3
1E6213-83410	91	32
1E6363-51430	91	28
1E6480-56410	47	8
1E6760-74150	11	16
	165	3
1E6A10-99011	105	21
1E6C20-81300	115	2
1E8080-95660	221	17
1E8235-84910	101	16
	102	16
1E8255-81180	111	16
1E8450-84900	104	15
	105	15
1E8545-80080	196	5
1E8660-53100	22	2
1E8665-83100	104	14
	105	14
1E8720-83120	101	15
	102	15
1E8915-81450	111	17
1E9170-81270	120	8
	122	15
1E9265-84300	101	20 A
		25 -1
		25 -2
	102	20 A
		25 -1
		25 -2
	104	19
	105	18
		19
	125	6
1S6489-63330	91	20
		23
	174	6
	223	13
1TS100-01001	200	1
22117-050000	215	4
22117-060000	184	55
22117-080000	79	8
22117-100000	77	8
22137-040000	238	13
	241	13
22137-050001	237	8
22137-060000	62	47
	198	8
22137-080000	6	11
	7	11

Parts No.	Fig. No.	Ref. No.
22137-080000	60	9
	61	14
	93	19
	186	32
	192	24
	197	10
	198	9
	229	48
22137-080001	234	28
22137-100000	5	9
	61	18
	92	19
	160	12
	175	9
	184	65
	220	7
	223	16
	227	12
22137-120000	36	10
	62	27
	94	9
	191	4
	239	9
	240	25
	243	7
22137-120001	234	29
	235	27
22137-140000	61	7
22137-160000	238	14
	241	14
	248	8
	249	4
22137-300000	61	8
22157-060000	3	11
	109	12
	139	40
	192	18
	229	49
22157-080000	6	13
	7	13
	34	8
	39	3
	95	10
	106	11
	174	10
	177	6
	196	26
	203	2
	222	14
	229	50

Parts No. Index

Parts No.	Fig. No.	Ref. No.
22157-080000	235	28
22157-100000	61	15
22157-160000	238	15
	241	15
22190-060000	8	40
	9	40
	231	39
	232	40
22217-080000	35	3
22217-100000	220	8
22217-120000	44	2
	157	8
22217-140000	157	9
22217-160000	85	11
	156	4
		8
	174	11
	245	7
22242-000200	38	5
22242-000220	20	3
	98	13
22242-000240	50	21 -1
22242-000250	50	21
		30
	59	43
22242-000260	78	14
22242-000290	48	8
	49	10
	50	22
22242-000300	18	5
	56	7
	91	33
22242-000450	85	12
22242-000500	85	13
	222	29
22242-100350	50	23
22252-000170	48	9
	50	31
	51	3
22252-000220	56	8
22252-000350	59	44
22252-000420	38	6
22252-000470	50	32
22252-000520	222	15
22252-000550	56	9
22252-000620	23	3
22252-000650	59	45
22252-000720	24	9
22252-000800	33	4
22252-000820	50	24

Parts No.	Fig. No.	Ref. No.
22272-000060	93	20
22272-000080	92	20
22272-000100	62	28
22272-000120	91	34
22272-000190	80	18
22292-000250	37	10
22312-080140	43	8
	46	10
	47	9
	66	6
	83	21
	222	30
22312-100180	24	10
22351-025014	89	7
22351-030020	184	8
22351-040014	89	8
22351-040040	19	8
	64	8
22351-050025	85	14
22351-050032	62	29
22351-050040	67	6
22351-050063	85	15
22351-060036	54	9
	55	9
	57	8
	80	19
22351-060050	61	9
	90	8
	191	5
22351-060060	93	21
22351-080018	44	3
22351-080032	67	7
22351-080040	67	8
22372-080000	175	7
	184	56
	186	2
	223	10
	229	51
22372-100000	62	30
	92	21
	141	2
22372-160000	178	5
	179	5
	219	5
22417-160120	198	10
22417-200100	47	10
22417-200200	149	17
	151	35
22417-250300	81	19
22417-320400	54	10

Parts No.	Fig. No.	Ref. No.
22417-400400	17	14
	37	22
22487-050100	192	9 B
22487-080160	60	10
	81	8
		20
22487-080200	2	21
	79	9
	92	22
22487-080450	184	57
22487-080600	186	30
22487-100240	250	3
22487-100350	141	3
22857-400100	196	27
22857-500100	125	7
22873-300060	115	10
23000-022000	4	5
		6
	196	28
23000-035000	98	14
23000-041000	2	22
23000-080000	14	16
23080-007000	143	5
	192	8
		9 C
		20
		21
23080-015000	2	46
	11	18
23414-140000	96	12
23414-180023	95	11
23414-190000	91	35
		36
23491-140002	33	5
	46	11
	222	16
23780-070600	2	23
23871-005000	57	9
23871-010000	46	3
	50	33
	83	22
		23
	96	13
23871-020000	43	9
	47	11
	83	24
23887-180002	46	13
23980-730500	2	24
24101-060054	50	34
		35

Parts No.	Fig. No.	Ref. No.
24101-060054	56	10
		15
24101-060064	56	11
24101-060074	64	9
	222	31
24101-060084	33	6
24101-060104	33	7
24101-060114	19	10
24101-062024	48	10
24101-062044	50	35 -1
24101-062054	52	9
	56	12
	222	17
		18
		32
24101-062064	25	4
24101-062074	21	4
	26	7
	52	10
	64	10
24101-062094	26	8
	71	4
24101-063044	48	11
	51	4
24101-063054	18	6
	49	11
	51	5
	222	19
24101-063064	69	3
24101-063074	49	12
	71	5
24104-060040	38	7
24104-062064	25	5
24111-060064	56	18
24161-303520	222	20
24162-222915	47	3
24190-080001	54	11
	55	10
24190-130003	89	9
24190-170001	78	15
24311-000030	87	4
24311-000110	2	36
	24	11
	57	10
24311-000140	53	3
	58	2
24311-000160	33	8
	46	14
	54	12
	59	55

Parts No. Index

Parts No.	Fig. No.	Ref. No.
24311-000160	222	21
24311-000180	46	15
	110	2
	112	4
		5
		6
24311-000200	67	9
	93	22
	95	12
		13
		14
	222	22
24311-000260	57	11
	95	15
24311-000300	85	16
24311-000320	43	10
24311-000340	59	56
	97	3
24311-000400	27	4
24311-000440	85	17
24311-000500	85	18
24311-000800	16	8
24311-000850	8	41
	9	41
	231	40
	232	41
24315-000080	89	10
24315-000100	87	5
24315-000110	59	35
	83	25
	86	2
24315-000140	38	12
		14
		15
	42	17
	43	6
	59	36
	83	26
		27
		28
24315-000150	90	9
	230	5
24315-000160	89	11
24315-000180	59	46
	83	29
		30
		31
	87	6
	89	12
24315-000200	90	10

Parts No.	Fig. No.	Ref. No.
24315-000200	230	6
24315-000220	87	7
24315-000350	37	15
	224	4
24321-000600	24	12
	59	37
24321-000650	59	38
24321-000750	16	9
24321-000950	24	13
24325-000750	83	32
24325-000900	83	33
24341-000080	47	17
	50	36
	57	12
24341-000100	47	12
	96	14
24341-000180	22	3
24341-000320	50	25
24341-000420	37	16
	224	5
24351-240300	83	34
24365-090800	91	37
24421-173007	46	4
24421-306210	23	4
24421-456209	59	57
24423-254208	43	2
24430-204206	38	8
24550-010100	92	4
		15
24550-015150	62	17
		21
		24
24550-015200	61	4
24550-025150	37	8
		18
24550-025200	80	9
		12
		15
24550-025250	43	11
24550-045400	83	6
24550-050400	83	7
24761-010000	16	10
	81	11
		14
25132-005600	198	13
26013-120352	245	12
26013-120652	245	13
26023-030102	115	11
26023-030162	111	18
26023-050202	111	19

Parts No.	Fig. No.	Ref. No.
26023-060202	151	36
26076-120302	243	8
26076-120352	234	30
	235	29
	239	10
	240	26
26106-060082	80	24
26106-060102	111	20
	139	41
	196	29
26106-060122	2	25
		26
	3	13
		14
		19
	6	12
	7	12
	14	17
		18
	40	6
	41	10
	77	9
	81	21
	91	38
	99	2
	101	29
	102	29
	105	22
	125	8
	128	2
	155	16
	183	5
	184	58
		59
		60
	196	30
		31
	216	3
	217	8
	218	8
26106-060162	1	1
	2	27
	6	14
	7	14
	92	23
	104	21
	105	23
	123	4
	124	9
	127	2

Parts No.	Fig. No.	Ref. No.
26106-060162	139	42
		43
	148	4
	161	3
	192	22
	229	52
26106-060202	95	16
	106	12
	109	13
	111	21
	196	32
	229	53
26106-060252	3	15
		16
		17
		18
	14	19
26106-060302	8	42
	9	42
	124	10
	231	41
	232	42
26106-060402	95	17
		18
26106-060502	83	35
26106-060602	58	3
26106-080122	83	36
	101	30
	102	30
		31
	103	5
	104	22
		23
	105	24
		25
	116	2
	140	9
	196	33
	229	54
26106-080162	2	49
	3	20
	6	15
	7	15
	13	2
	14	20
		21
		22
	24	14
	27	5
		6

Parts No. Index

Parts No.	Fig. No.	Ref. No.
26106-080162	42	18
		19
		20
		21
		22
	43	12
		13
	46	16
	47	13
		14
	54	13
	59	58
		59
	62	5
		48
	64	11
	68	2
	77	10
	91	39
		40
		41
		42
	92	24
		25
	93	23
		24
		25
	94	17
	95	19
		20
	96	15
		16
	98	15
	100	5
	104	24
	105	26
	109	14
	119	7
	122	21
	133	2
	134	3
	136	5
	137	5
	138	4
		5
	140	10
	148	5
	152	8
	154	2
	155	17

Parts No.	Fig. No.	Ref. No.
26106-080162	155	21
	158	2
	159	2
	160	16
	163	2
	164	3
	174	13
	182	9 F
	197	11
	198	14
	222	23
	225	8
	226	9
	227	16
	229	55
	235	30
26106-080202	1	2
	46	21
	78	16
	79	3
	82	6
		7
	153	5
	196	34
	197	12
	198	15
	203	3
	222	24
	229	56
	237	9
26106-080252	1	3
	3	21
		22
	39	4
	46	17
	57	13
	59	60
	97	4
	182	9 G
	198	16
	222	33
26106-080302	4	7
	34	9
	35	2
26106-080352	93	26
		27
26106-080402	6	16
	7	16
	66	7
26106-080452	165	4

Parts No.	Fig. No.	Ref. No.
26106-080452	166	2
	198	17
26106-080502	3	12
	192	23
26106-080602	91	43
	209	4
26106-080652	53	4
	122	22
	182	11
26106-080702	217	9
	220	11
26106-080752	222	34
26106-080802	91	44
26106-080902	13	3
26106-081002	91	45
26106-100162	155	18
		19
	157	10
	209	5
26106-100202	91	46
	208	13
26106-100252	26	9
	38	16
	46	18
	65	3
	83	37
	184	61
26106-100352	47	15
	198	18
26106-100402	43	14
	83	38
26106-100502	43	15
	57	14
	66	8
26106-100552	15	4
	59	62
26106-100652	66	9
26106-100952	43	16
26106-120162	155	20
	182	12
26106-120252	16	3
	155	22
26106-120302	23	5
	46	22
26106-120402	156	5
26106-120452	46	19
26106-120502	44	4
	83	39
26106-120652	209	6
26116-040402	238	16

Parts No.	Fig. No.	Ref. No.
26116-040402	241	16
26116-050162	237	10
26116-080162	234	31
26116-080454	62	6
		51
26116-100302	33	9
26116-120352	219	6
	235	31
	248	9
	249	5
26116-120804	243	9
26116-160252	238	17
	241	17
26116-160302	156	6
		9
26116-160352	238	18
	241	18
26116-160452	246	6
26116-161102	245	8
26156-100252	160	13
	227	13
26216-060252	8	44
	9	44
	231	42
	232	43
26216-080352	82	8
26216-120902	44	5
26216-160352	43	17
26218-080202	61	16
26306-080002	82	9
26306-100002	198	11
26346-050002	237	11
26346-080002	62	7
		49
	80	20
	174	12
	177	7
	206	10
	207	10
26346-100002	5	10
	191	6
26346-120002	59	54
26356-120002	36	11
	94	10
26366-080002	24	15
	54	14
	61	17
	93	28
		29
26367-080002	101	31

Parts No. Index

Parts No.	Fig. No.	Ref. No.
26367-080002	102	32
26376-120002	78	17
26450-080122	24	16
26450-080202	86	3
26450-080252	59	61
26450-120352	45	4
26450-120452	45	6
26455-050302	237	12
26455-080162	234	32
26455-080202	59	47
26487-060163	148	6
26487-080163	217	10
	218	9
26557-050082	215	5
26557-050122	91	47
	119	8
	193	3
26557-050202	121	4
26557-050352	111	22
26557-060122	229	57
26557-060162	115	12
26559-050162	151	37
	196	35
26577-060142	59	48
26577-060202	184	62
26577-080252	184	63
26587-050122	111	23
26587-060122	184	64
26589-060162	142	4
	143	6
	144	2
26589-060252	149	18
26589-060502	149	19
26667-060002	8	45
	9	45
	231	43
	232	44
26696-100002	160	14
	227	14
26716-040002	238	19
	241	19
26716-050002	119	9
26716-060002	92	26
	107	4
	128	3
26716-080002	60	5
	62	37
		43
	93	30
		31

Parts No.	Fig. No.	Ref. No.
26716-080002	237	13
26716-100002	33	10
	88	2
	175	8
	223	11
26716-120002	44	6
	59	54 C
	157	11
	201	4
	243	10
	249	6
26716-140002	157	12
26716-160002	156	10
	235	32
	240	27
	245	9
	248	10
	249	7
26736-100002	220	9
26736-160002	85	19
26756-200002	235	33
	240	28
26776-120002	111	10
26776-160002	87	8
26776-200002	16	4
27260-220000	46	12
27260-300000	44	7
27260-320000	97	5
27260-470002	43	18
29311-092000	125	9
29311-124000	203	4
29621-150001	237	14
29621-200001	42	4
29621-300000	238	20
	241	20
29622-140001	101	32
		33
		34
	102	33
		34
		35
		36
		37
	104	25
	105	27
	116	3
	119	10
	221	18
29622-250001	3	23
	8	30

Parts No.	Fig. No.	Ref. No.
29622-250001	8	43
	9	30
		43
	92	27
	101	36
	102	39
	104	26
	105	28
	231	44
		45
	232	45
		46
41801-110041	139	44
41810-000120	43	19
	189	25
41810-000160	43	20
794130-71410	176	11
	178	2
	179	2
	181	1
933147-10350	222	25

Parts No.	Fig. No.	Ref. No.